Upholstered bed

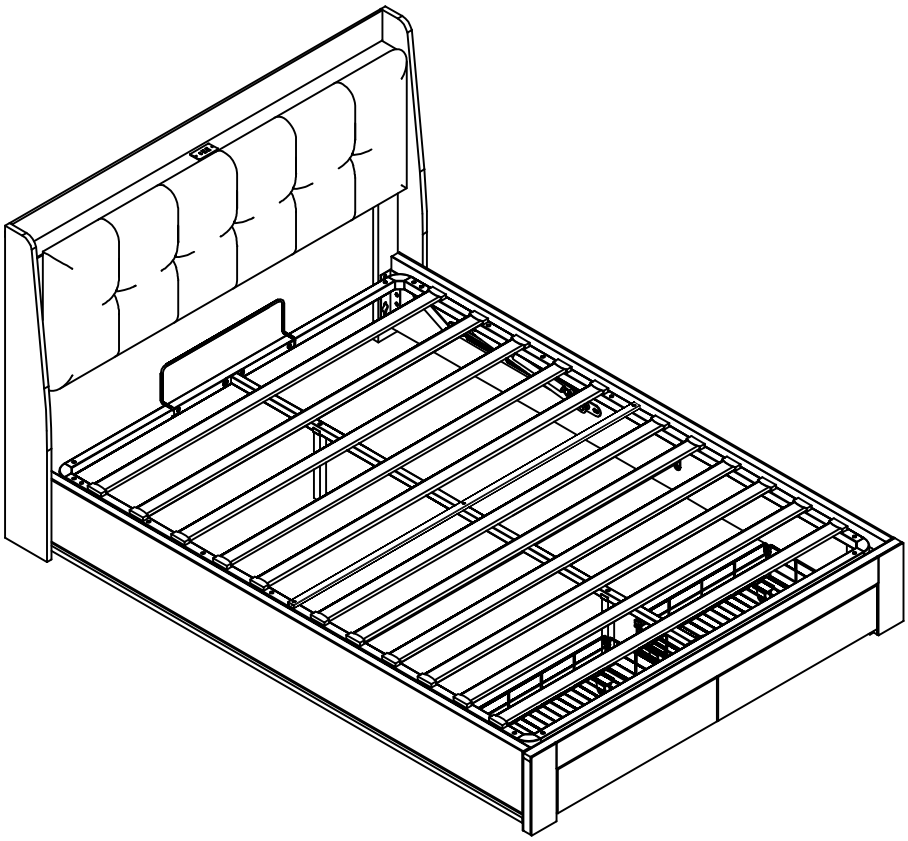

TIPS

1.This product is divided into 3 parcels for delivery. They may not arrive at the same time. Please wait patiently.

2.Please read the instructions fully before assembly. These instructions include important information which could ensure correct assembly. We have been working on providing high quality products for you. However, in the rare instance that your product is defective,missing parts or there are some issues, please don't hesitate to contact our customer service to submit parts requirements, assembly suggestion,or warranty claims, and we will give the best solution as soon as possible. If necessary, we need you to provide some more clear pictures of the issue.

3.Insert the screws in holes and tighten the screws, but not too tight, 70%~80% is ok, finally tighten all the screws. If some issues happened that some screws can not target to the hole or some parts are difficult to install, please adjust the tightness of the screws.

4.2 people are recommended to finish.

English

IMPORTANT FOR GAS LIFT BEDS&MAINTAINCE

- Please place the mattress on top of the bed frame.
- Please do not pull on the strap handles.
- Please press heavily to release the compressed gas.
- Periodically check all screw & fixings to ensure they are secure.
- When moving your product, carefully lift into place.
- Wipe clean with a slightly damp cloth- please do not use abrasive chemicals or bleach.
- Do NOT allow children to operate the lift mechanism.
- Do NOT allow children near the lift base when operating the mechanism.
- Do NOT stand inside the bed or the internal storage base.
- Do NOT overload the internal storage base.
- DO NOT jump on the product or any of its parts.

Deutsch

WICHTIG FÜR GASLIFT-BETTEN&WARTUNG

- Bitte legen Sie die Matratze oben auf den Bettrahmen.
- Bitte ziehen Sie nicht an den Gurtgriffen.
- Bitte drücken Sie kräftig, um das komprimierte Gas freizusetzen.
- Überprüfen Sie regelmäßig alle Schrauben und Befestigungen, um sicherzustellen, dass sie sicher sind.
- Wenn Sie Ihr Produkt bewegen, heben Sie es vorsichtig an seinen Platz.
- Mit einem leicht feuchten Tuch abwischen - bitte keine scheuernden Chemikalien oder Bleichmittel verwenden.
- Erlauben Sie Kindern NICHT, den Hebemechanismus zu bedienen.
- Lassen Sie Kinder NICHT in die Nähe des Liftsockels, wenn Sie den Mechanismus bedienen.
- Stellen Sie sich NICHT in das Bett oder in die Innenablage.
- Überlasten Sie den internen Liftsockel NICHT.
- Springen Sie NICHT auf das Produkt oder eines seiner Teile.

Français

IMPORTANT POUR LES LITS À RELEVAGE DE GAZ&MAINTENANCE

- Veuillez placer le matelas sur le dessus du cadre de lit.
- Ne tirez pas sur les poignées de la sangle.
- Appuyez fortement pour libérer le gaz comprimé.
- Vérifiez régulièrement que toutes les vis et fixations sont bien en place.
- Lorsque vous déplacez votre produit, soulevez-le avec précaution pour le mettre en place.
- Nettoyez avec un chiffon légèrement humide - n'utilisez pas de produits chimiques abrasifs ou d'eau de Javel.
- Ne laissez pas les enfants utiliser le mécanisme de levage.
- Ne laissez pas les enfants s'approcher de la base de levage lorsqu'ils actionnent le mécanisme.
- Ne vous tenez PAS à l'intérieur du lit ou de la base de stockage interne.
- Ne surchargez pas la base de stockage interne.
- Ne pas sauter sur le produit ou l'une de ses parties.

Italiano

IMPORTANTE PER I LETTI CON SOLLEVAMENTO A GAS E LA MANUTENZIONE

- Posizionare il materasso sopra la struttura del letto.
- Non tirare le maniglie della cinghia.
- Premere con forza per rilasciare il gas compresso.
- Controllare periodicamente tutte le viti e i fissaggi per assicurarsi che siano saldi.
- Quando si sposta il prodotto, sollevarlo con cautela.
- Pulire con un panno leggermente umido, senza usare prodotti chimici abrasivi o candeggina.
- NON permettere ai bambini di azionare il meccanismo di sollevamento.
- NON permettere ai bambini di avvicinarsi alla base di sollevamento quando si aziona il meccanismo.
- NON sostare all'interno del letto o della base di contenimento interna.
- NON sovraccaricare la base di contenimento interna.
- NON saltare sul prodotto o sulle sue parti.

Español

IMPORTANTE PARA LAS CAMAS ELEVADORAS DE GAS&MANTENIMIENTO

- Coloque el colchón sobre el somier.
- No tire de las asas de la correa.
- Presione con fuerza para liberar el gas comprimido.
- Compruebe periódicamente que todos los tornillos y fijaciones estén bien sujetos.
- Al mover el producto, levántelo con cuidado para colocarlo en su sitio.
- Limpie con un paño ligeramente humedecido; no utilice productos químicos abrasivos ni lejía.
- NO permita que los niños accionen el mecanismo de elevación.
- NO permita que los niños se acerquen a la base elevadora cuando accionen el mecanismo.
- NO se ponga de pie dentro de la cama o de la base de almacenamiento interna.
- NO sobrecargue el somier.
- NO salte sobre el producto ni sobre ninguna de sus piezas.

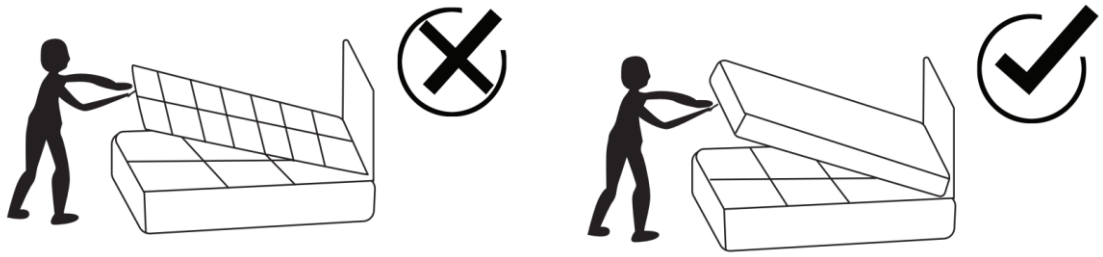

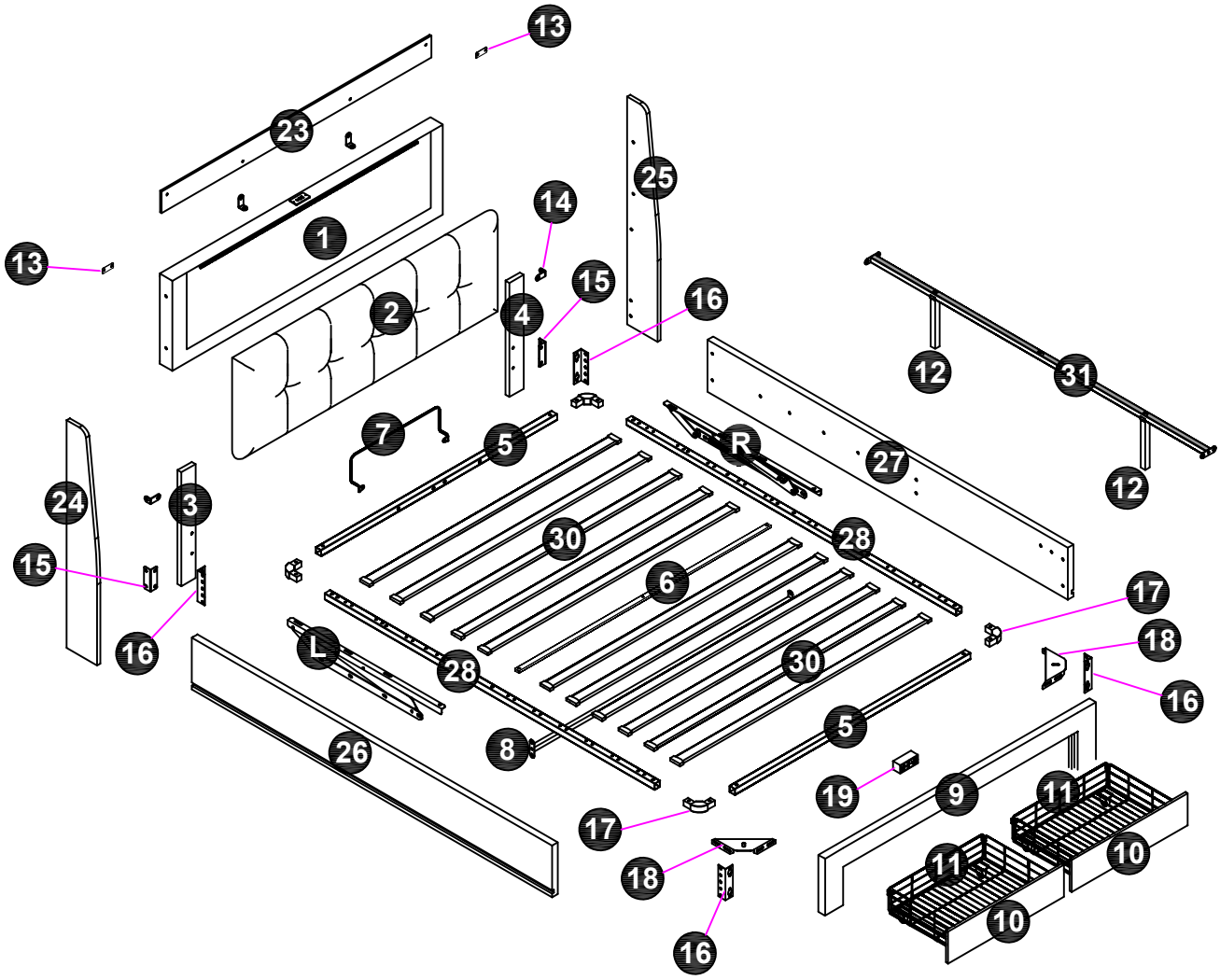
13
23
25
14
1
13
15
16
2
4
12
31
7
5
R
27
12
24
3
30
28
15
6
17
18
16
L
28
30
16
5
26
8
19
9
11
17
10
18
11
10
16

N652P335178

1	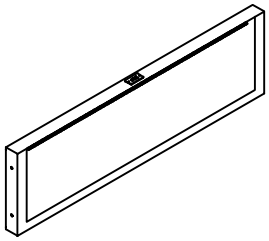	X1	8	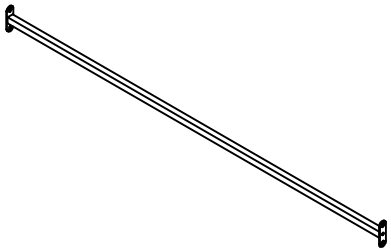	X1
2	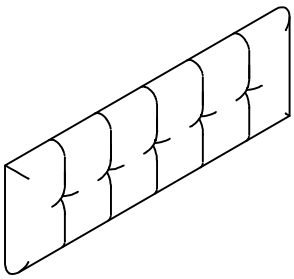	X1	9	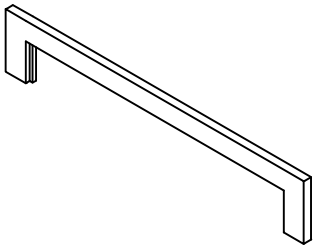	X1
3		X1	10	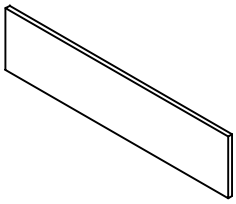	X2
4		X1	11	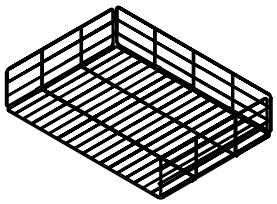	X2
6	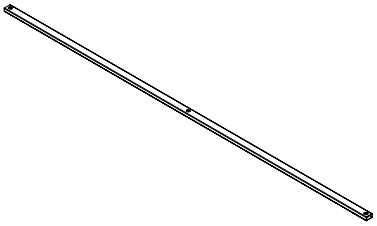	X1	12		X2
7	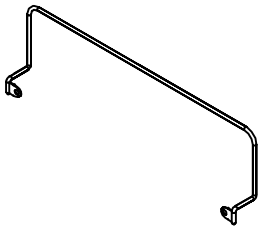	X1	13	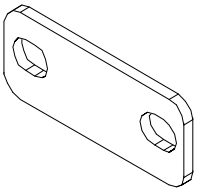	X2

05/24

N652P335178

14	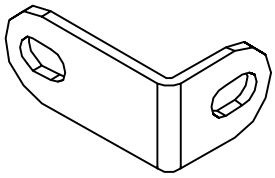	X4	21	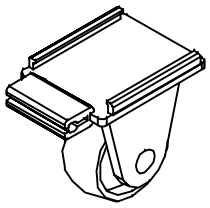	X8
15	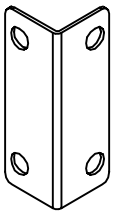	X2	22	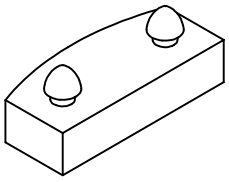	X22 +2
16	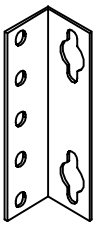	X4	L	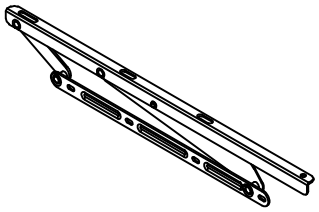	X1
17	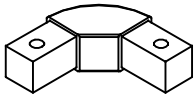	X4	R	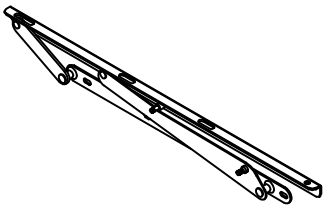	X1
18	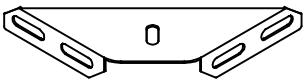	X2	29		X1
19	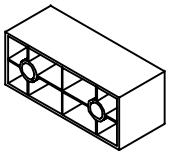	X1	32	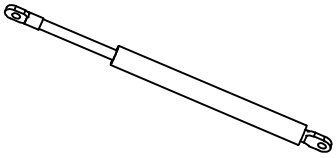	X2

N652P335178

34	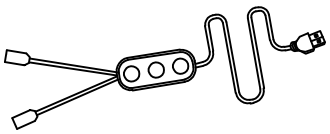 Power cord	X1			
35	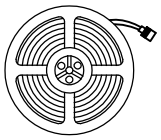 **Light strip 2PCS**	X2			

N652P335179

23	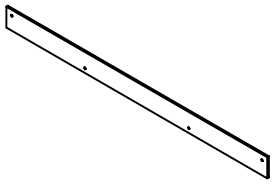	X1	31	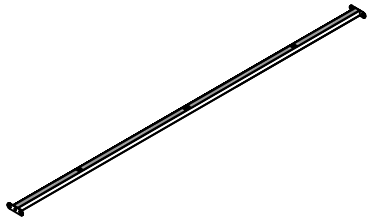	X1
24		X1	30	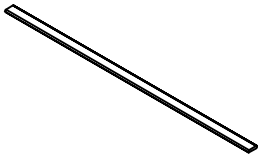	X11
25		X1	5	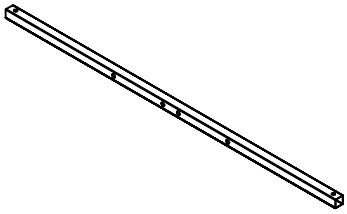	X2
26	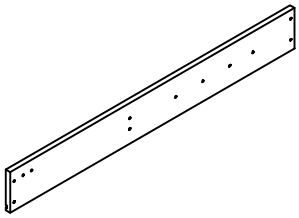	X1			
27	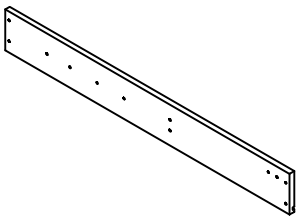	X1			
28	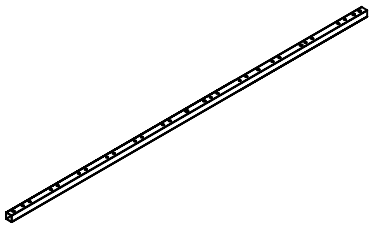	X2			

Hardware List-Hardware-Liste-Liste du matériel

N652P335178

A	M8*12	X8+1	O	M8	X12+1	Y		X8+1
B	M8*15	X68+2	R	M6	X1	J	M3*12	X2+1
C	M8*25	X6+1	S	M8	X1	T		X1
D	M8*35	X3+1	Q		X4+1			
E	M8*45	X10+1	U		X1			
F	M6*10	X8+1	W		X4+1			

09/24

1	M8*25 CX4pcs	M8 SX1pc

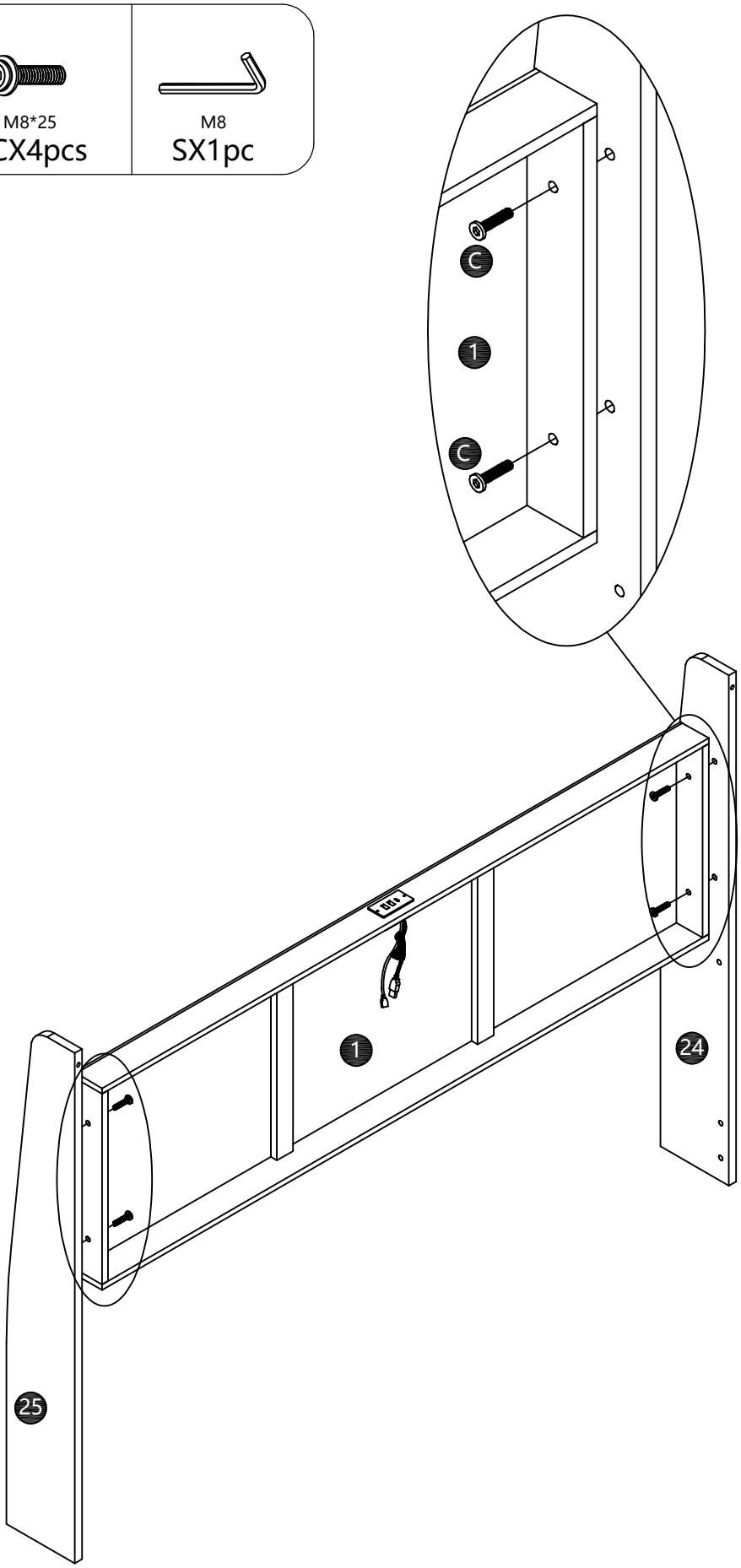

2	M6X10 FX8pcs	M6 RX1pc

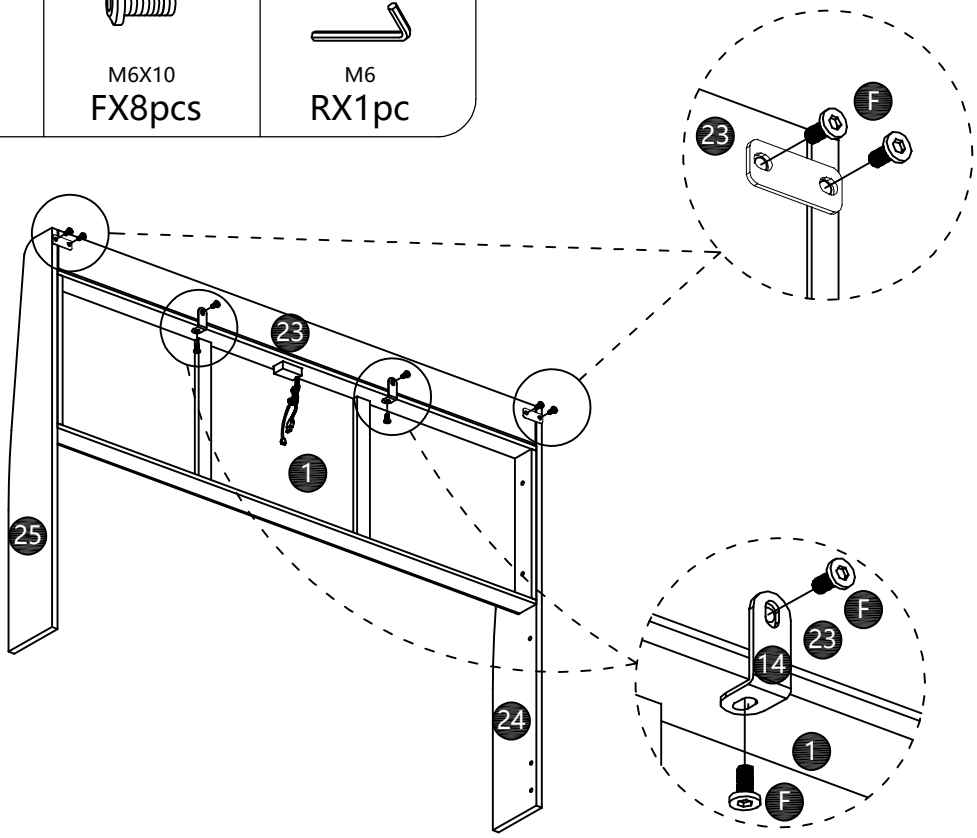

3	M8X15 BX12pcs	M8 SX1pc

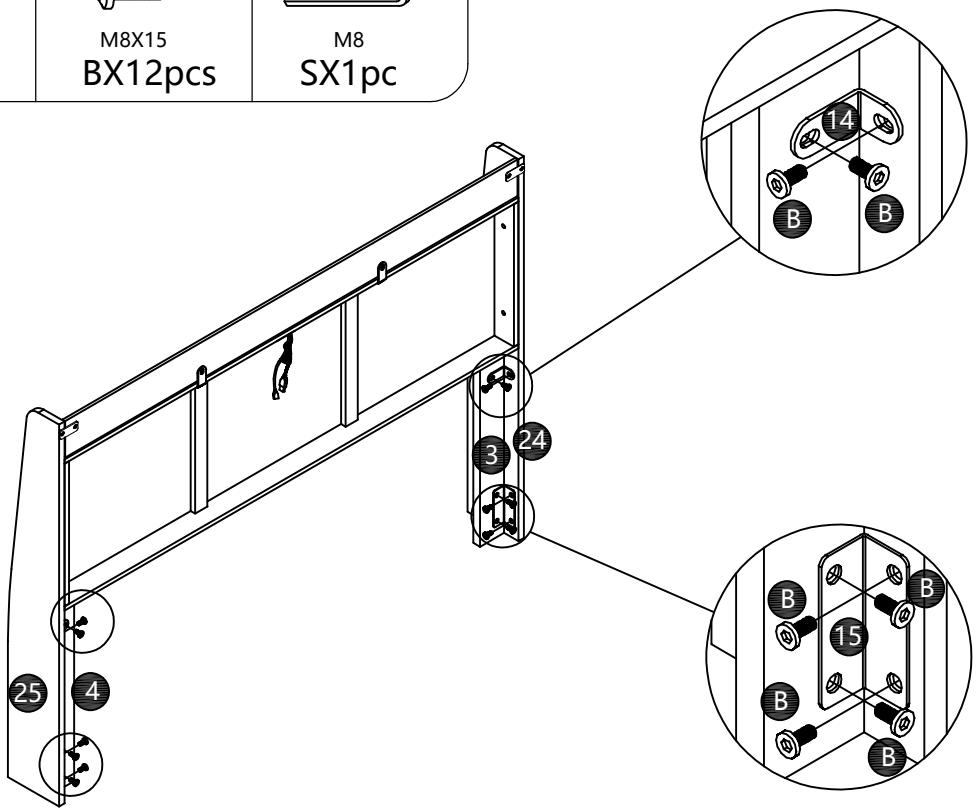

4	M8X15 BX16pcs	M8 SX1pc

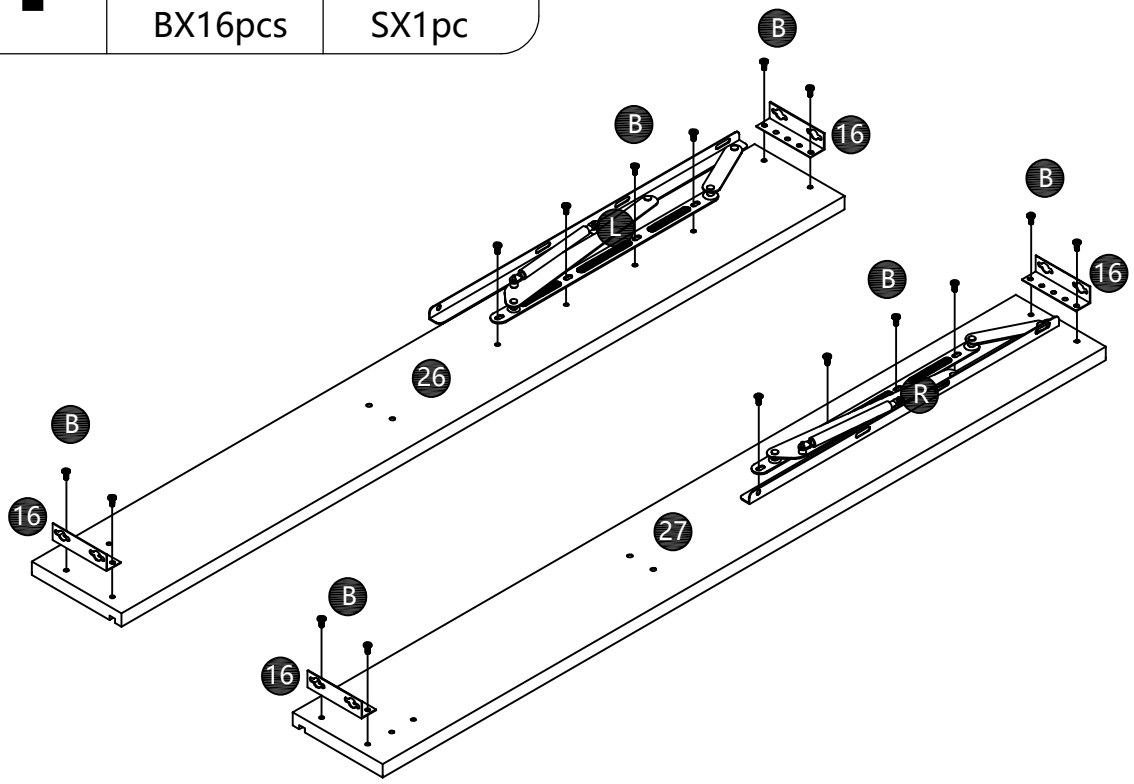

5	M8X15 BX4pcs	M8 SX1pc

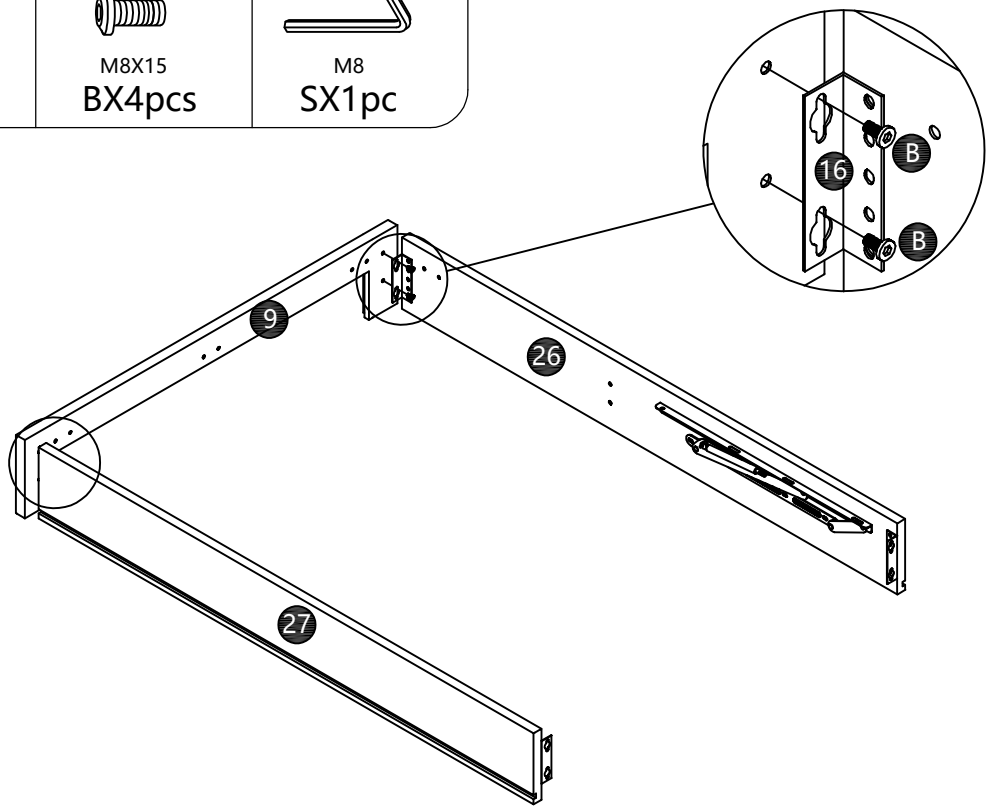

6	M8X15 BX4pcs	M8 SX1pc

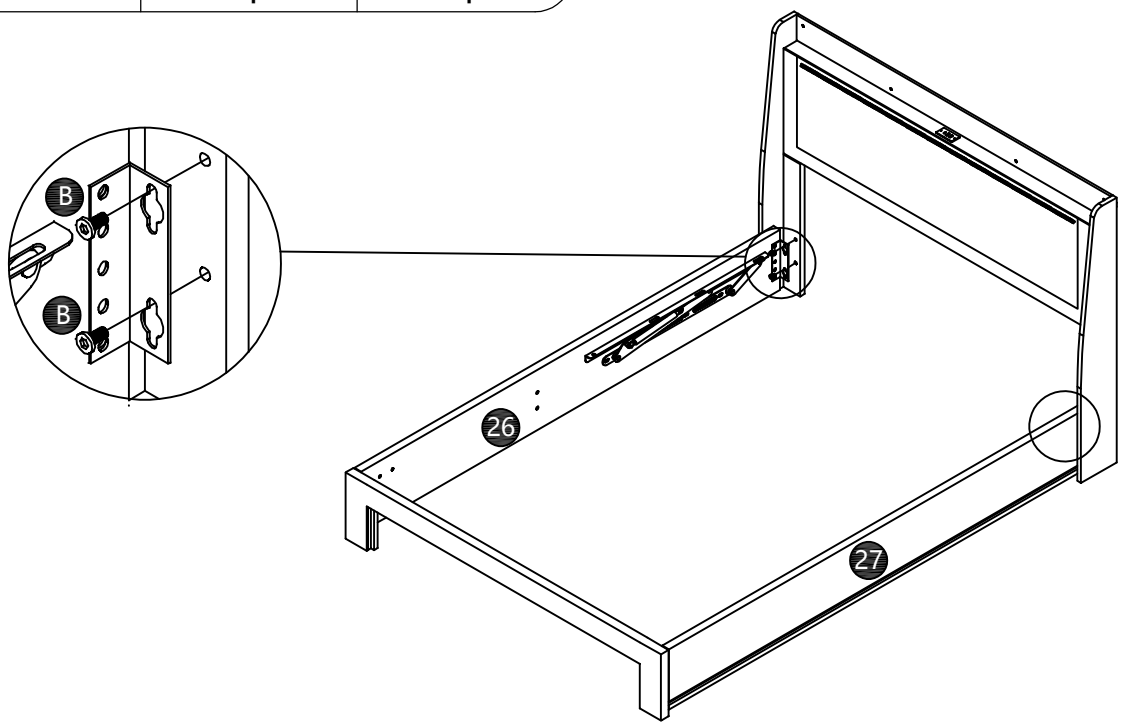

7	M8X15 BX4pcs	M8 SX1pc

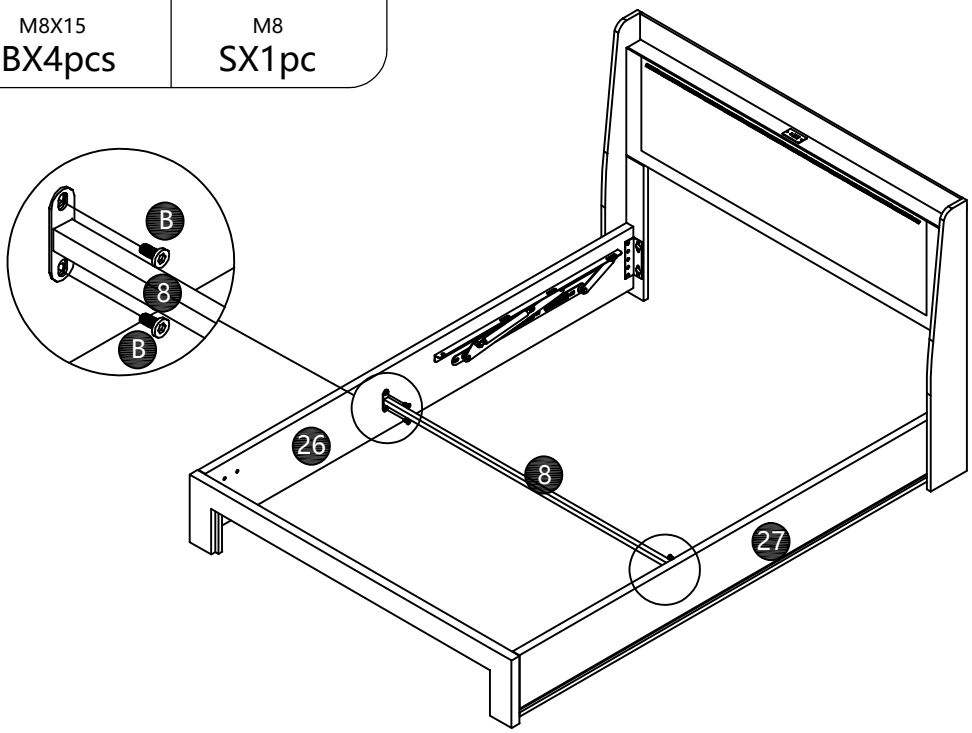

8	M8X15 BX8pcs	M8X45 EX2pcs	M8 SX1pc	WX4pcs

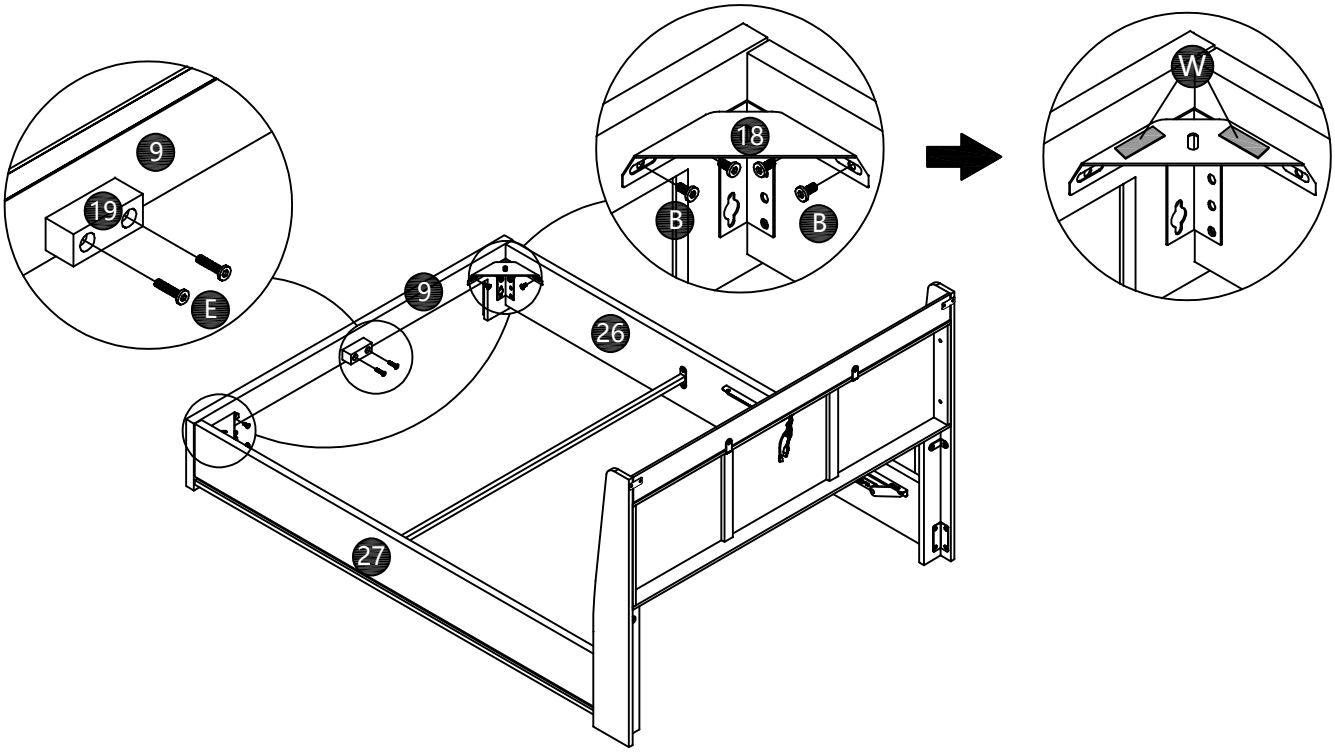

9	M8X12 AX8pcs	M8 SX1pc

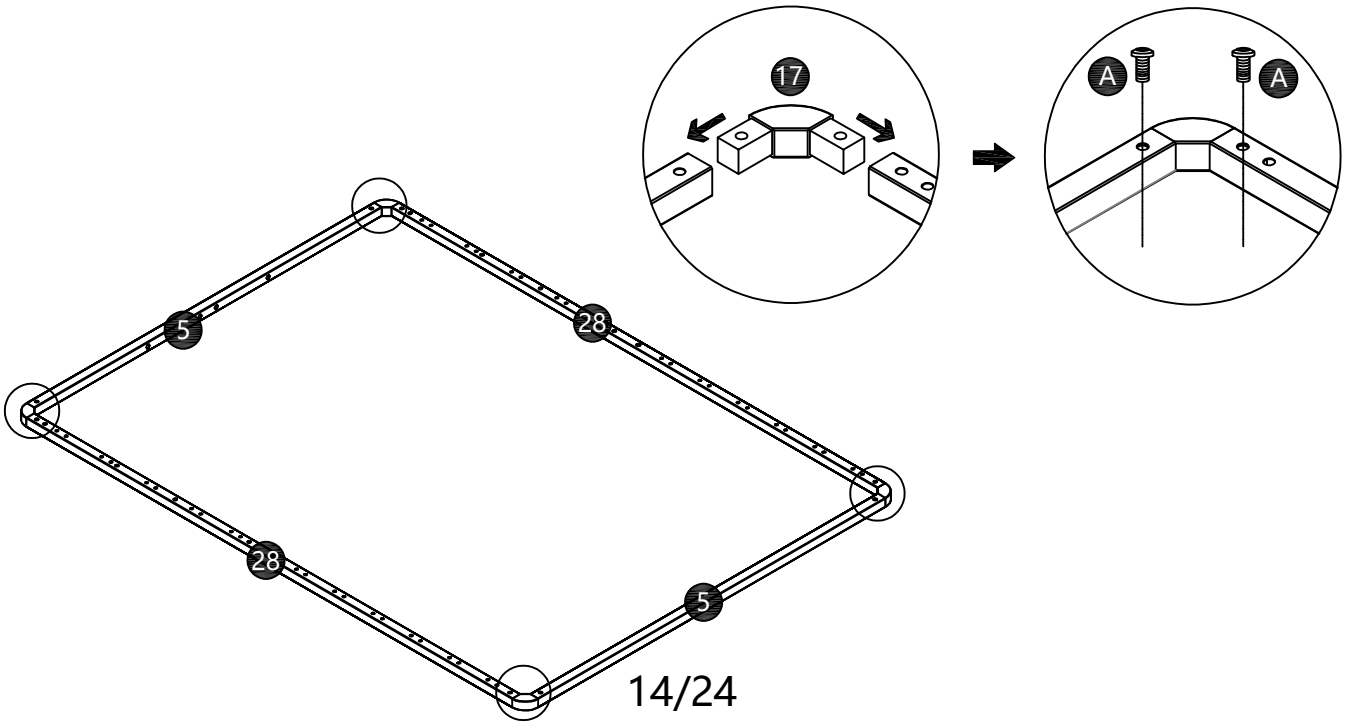

10

M8X15 BX2pcs	M8 SX1pc

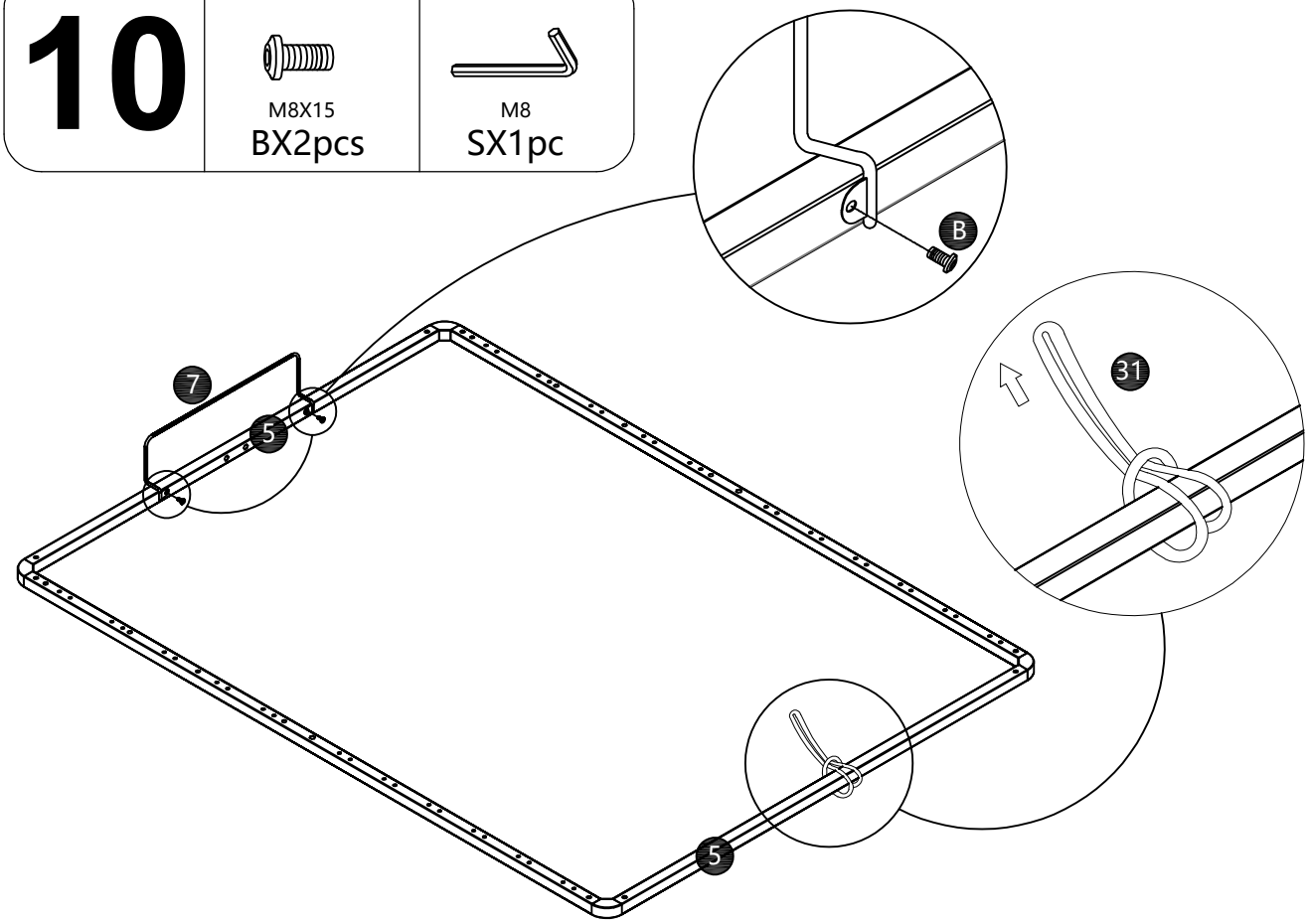

11

M8X45 EX2pcs	M8 SX1pc	M8 OX2pcs	UX1pc

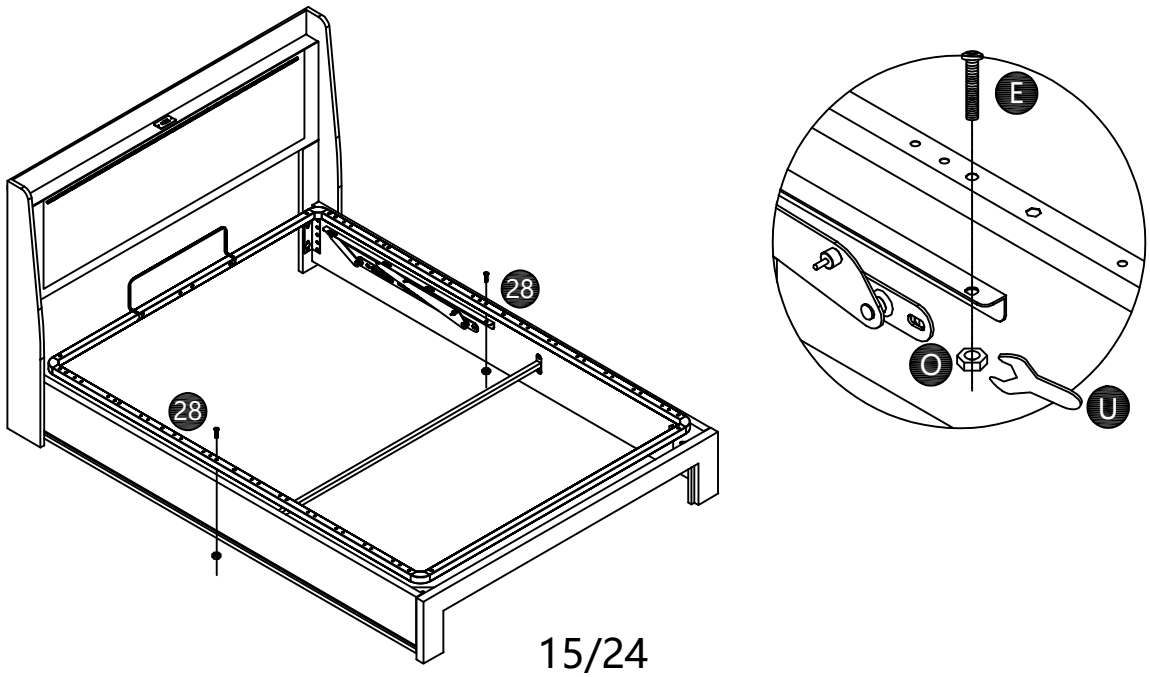

12				
	M8X45 EX6pcs	M8 SX1pc	M8 OX6pcs	UX1pc

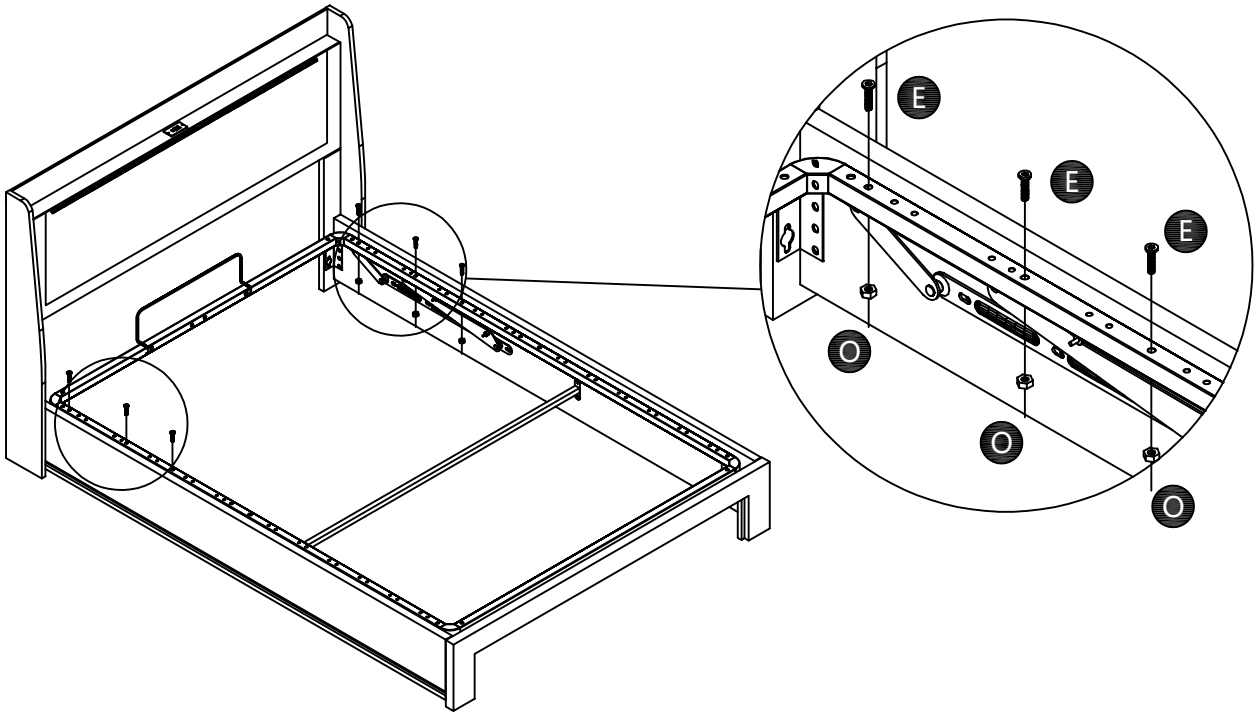

13		
	M8X35 DX2pcs	M8 SX1pc

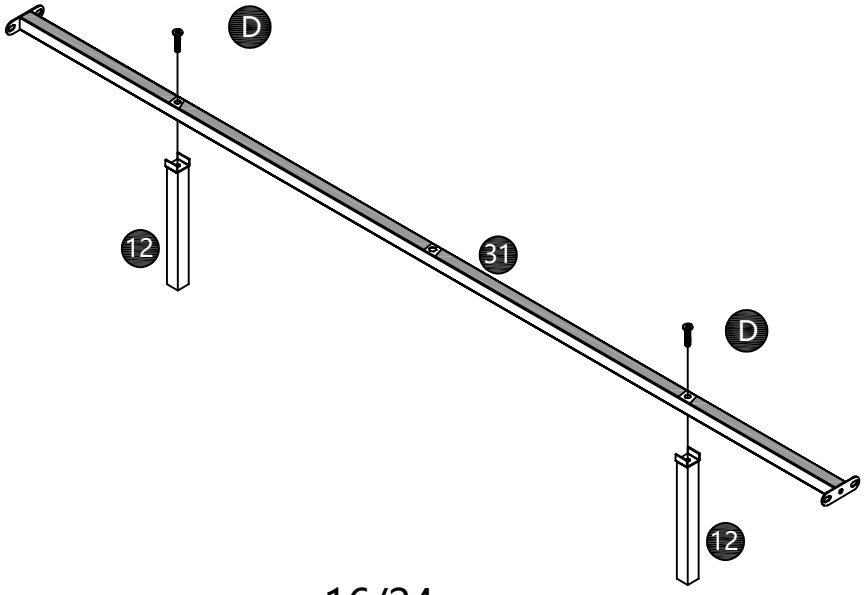

14	M8X15 BX4pcs	M8 SX1pc

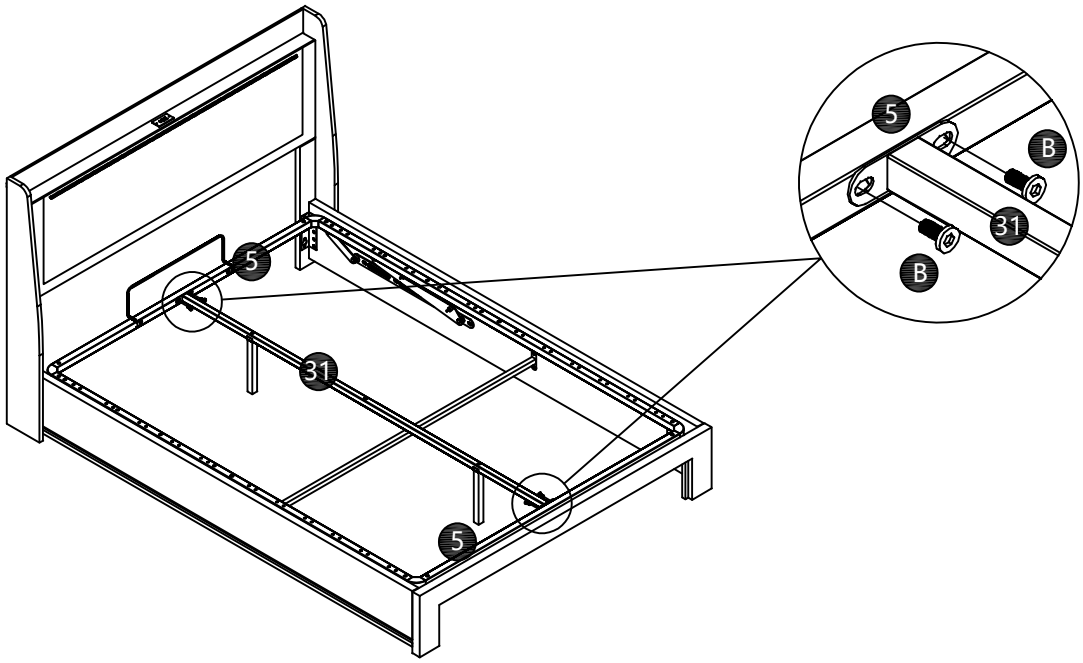

15	M8*25 CX2pcs	M8*35 DX1pcs	M8 SX1pc

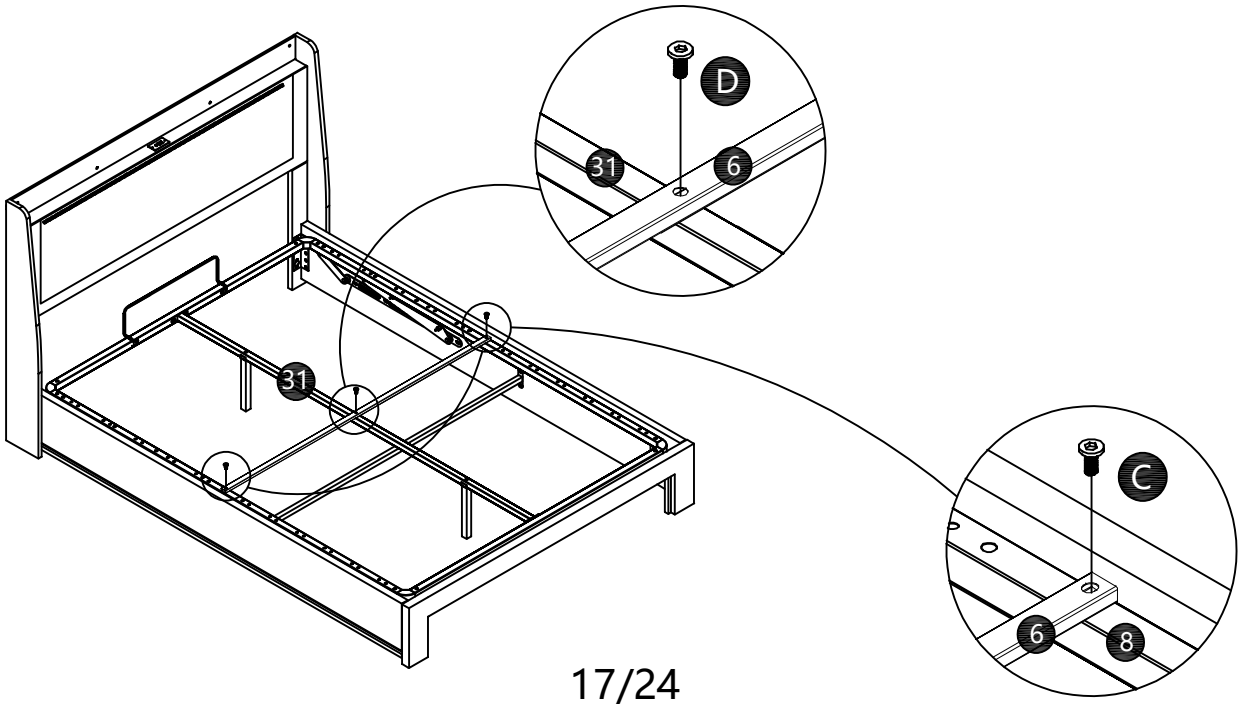

16

	M8 OX4pcs	UX1pc

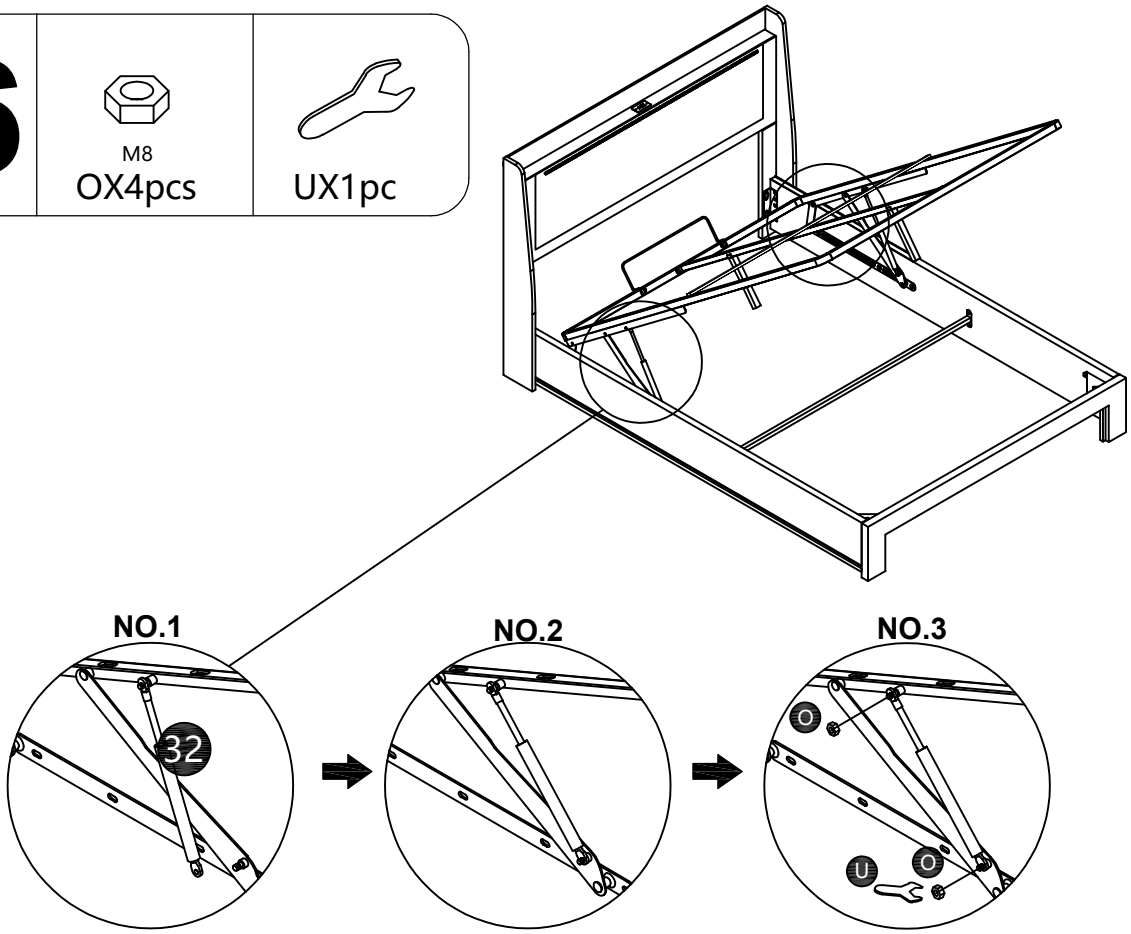

17

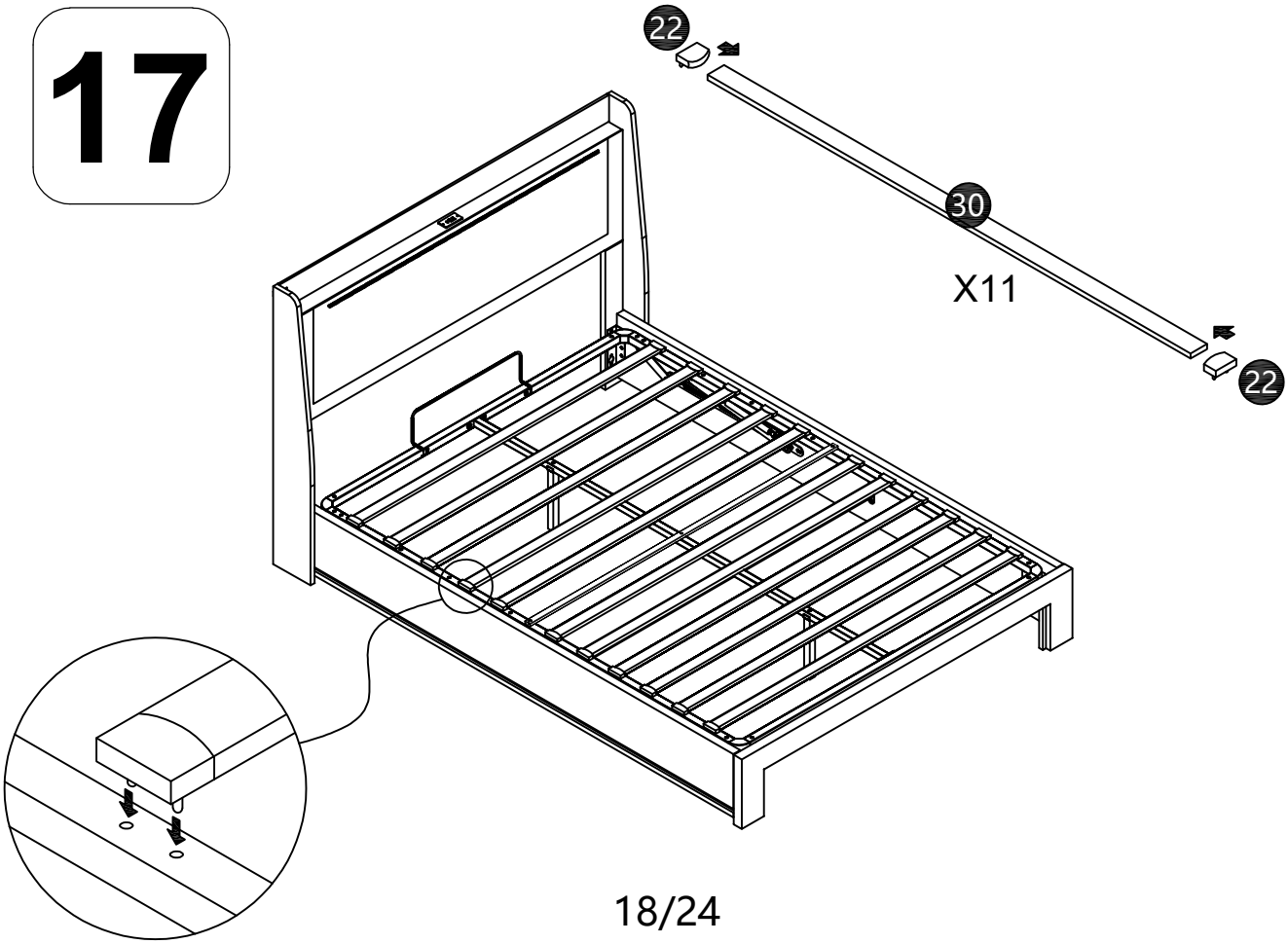

18

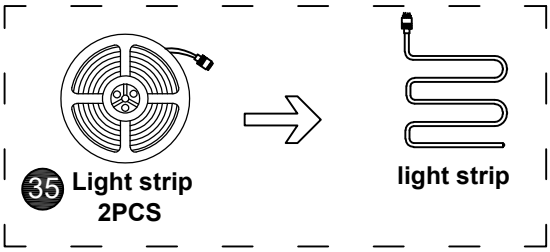

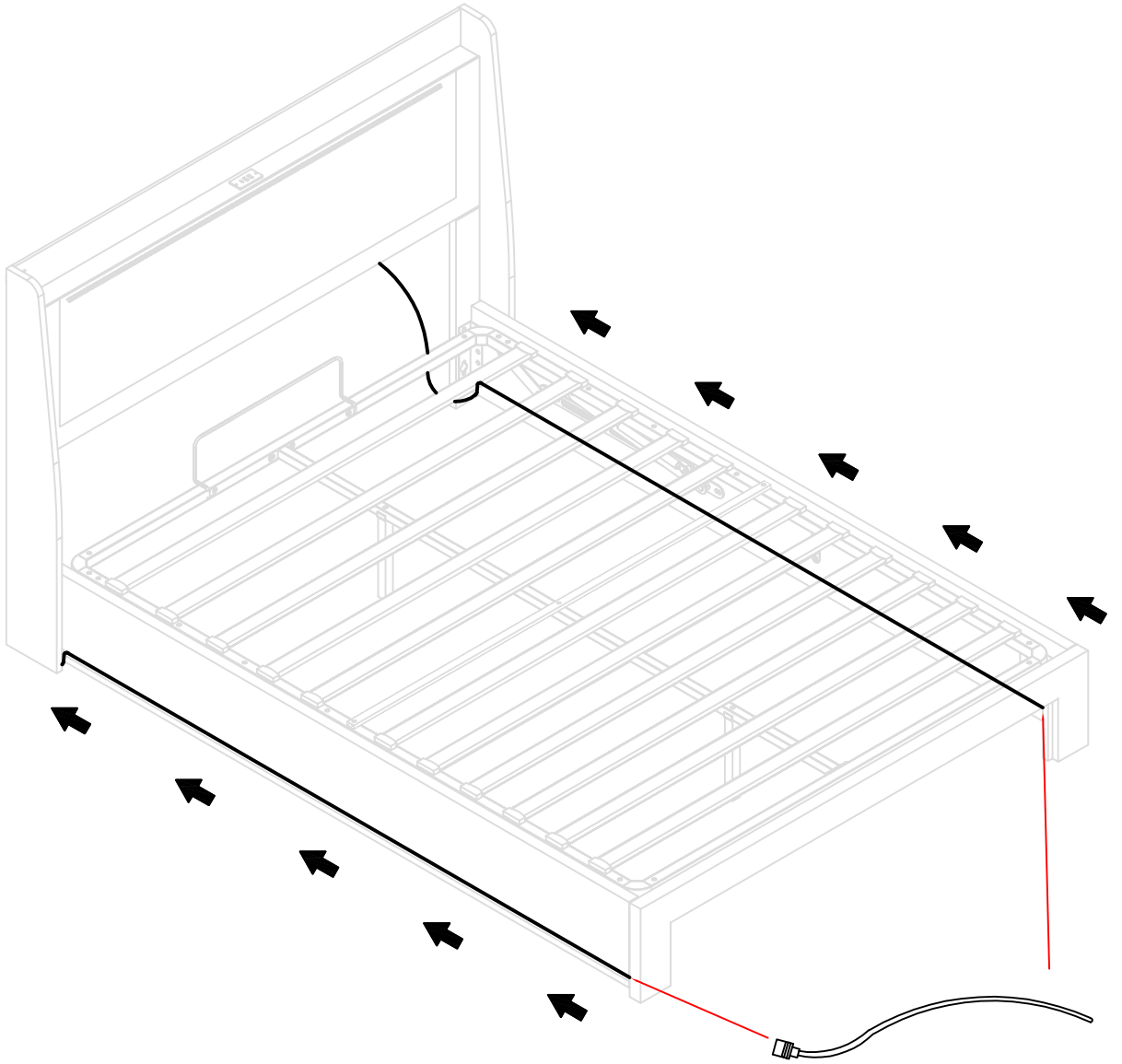

At the bottom stick the light strip on

19

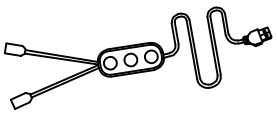

34 Power cord

1PC

You can use Magic tape to stick the connecting wire of the light strip anywhere.

20

QX4pcs

As shown in the figure Clip the pulley into position first

Then push the pulley to the side
At the same time, clamp the iron wire at the edge.It takes a little strength

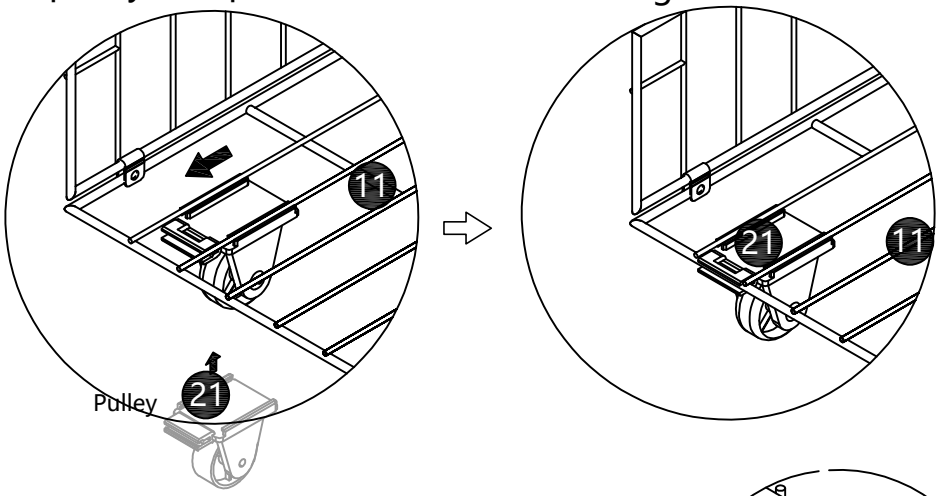

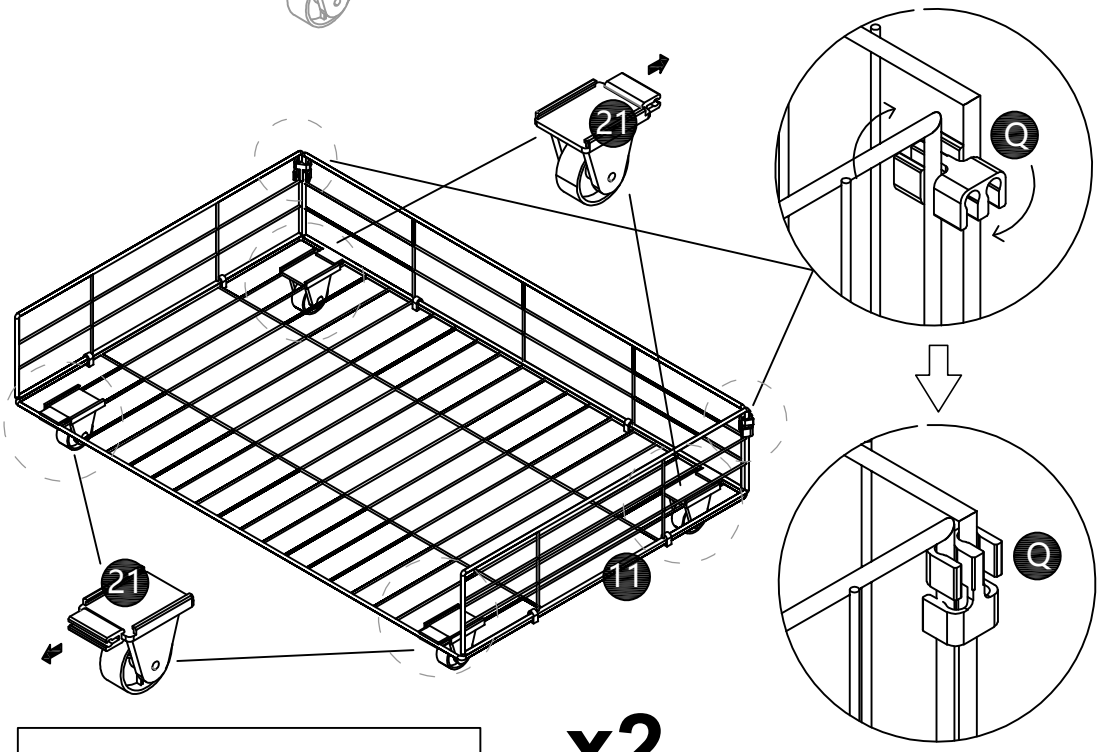

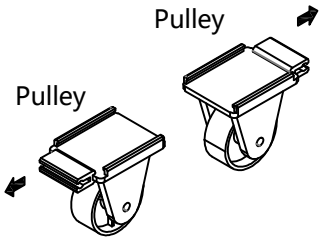

Pay attention to the orientation before clamping in

x2

Please note that this drawer base (11) has front and back sides! Please see the instructions clearly before assembling!!!

21	M8X15 BX8pcs	YX8pcs	M8 SX1pc

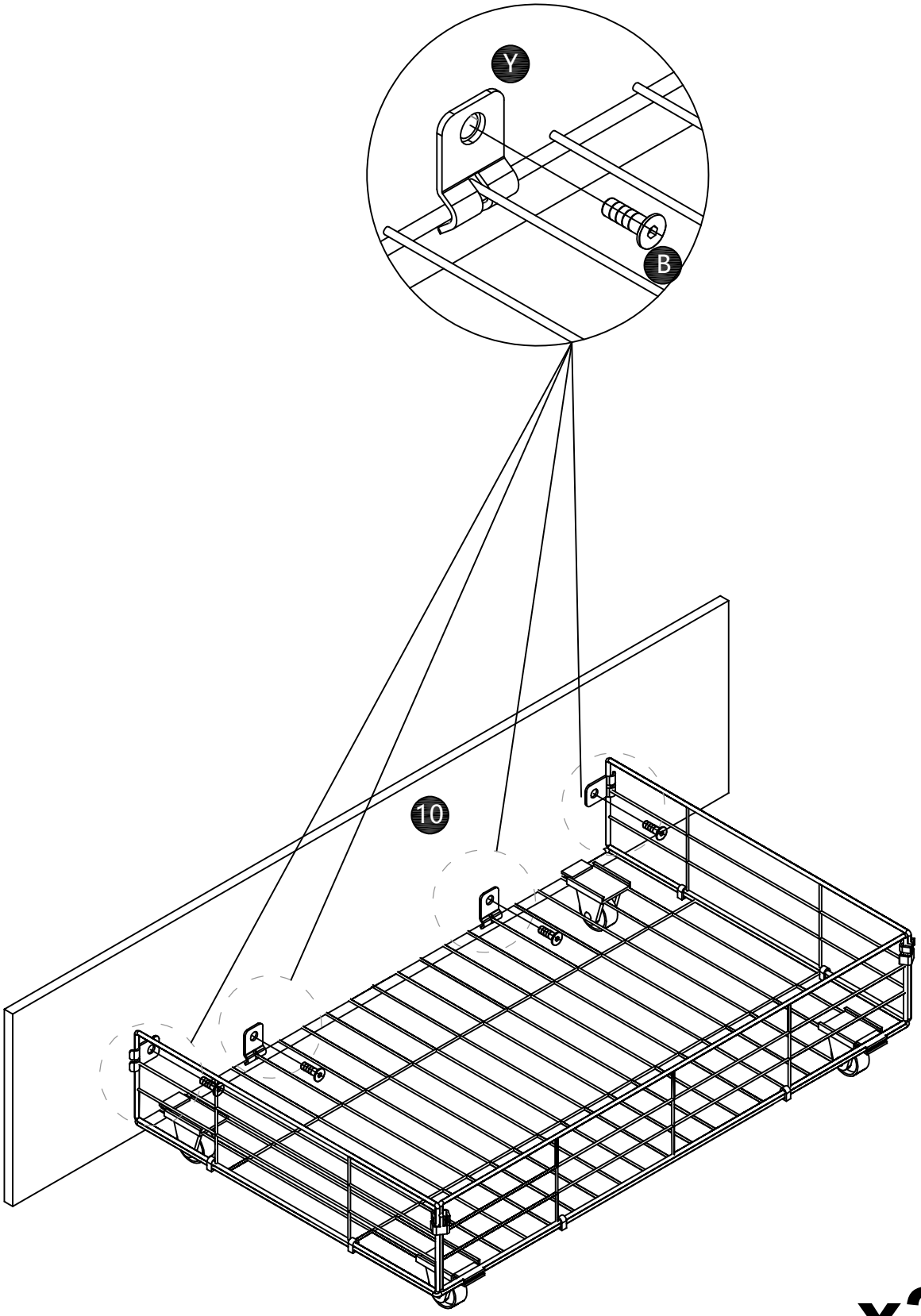

x2

22

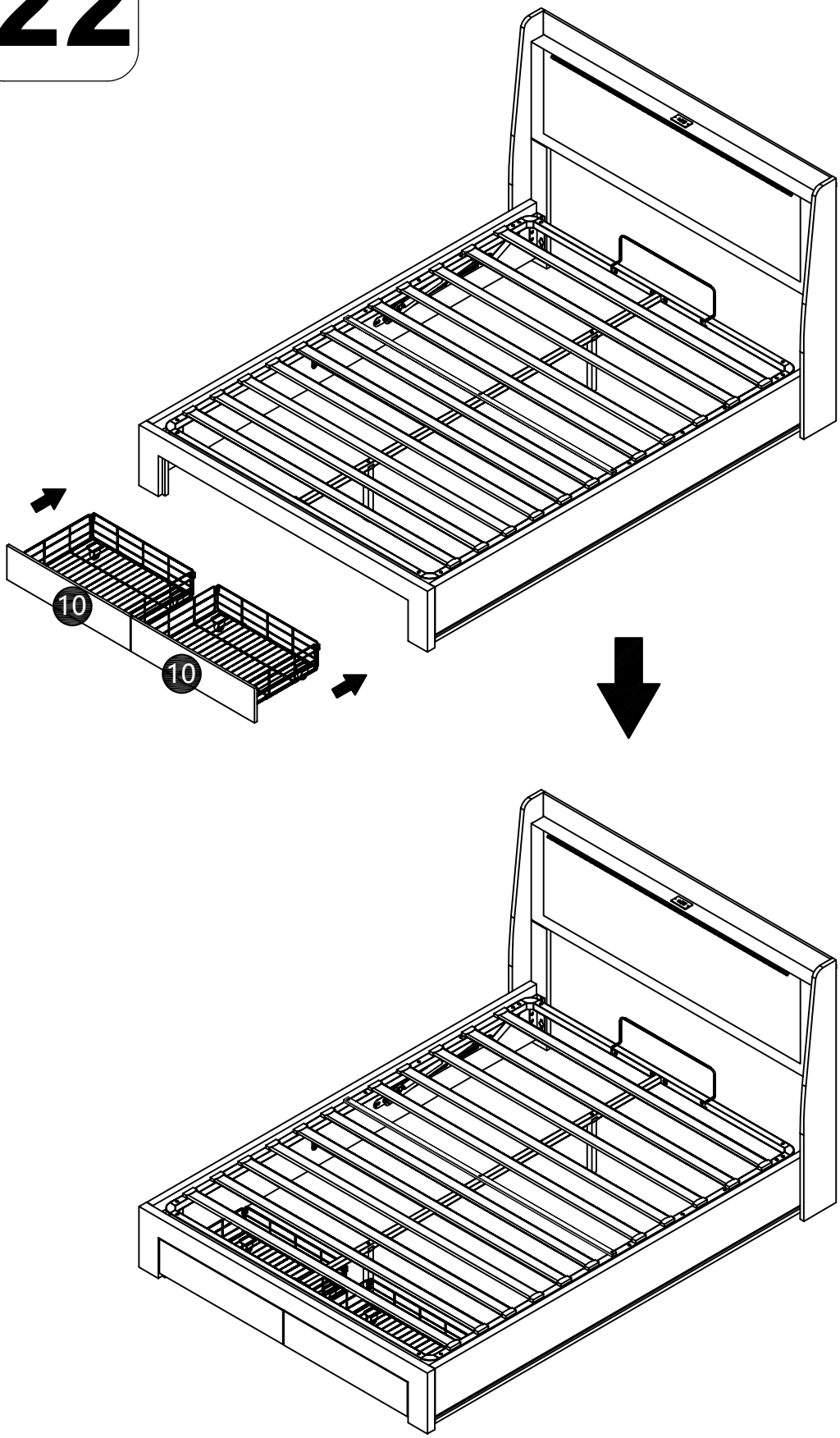

23

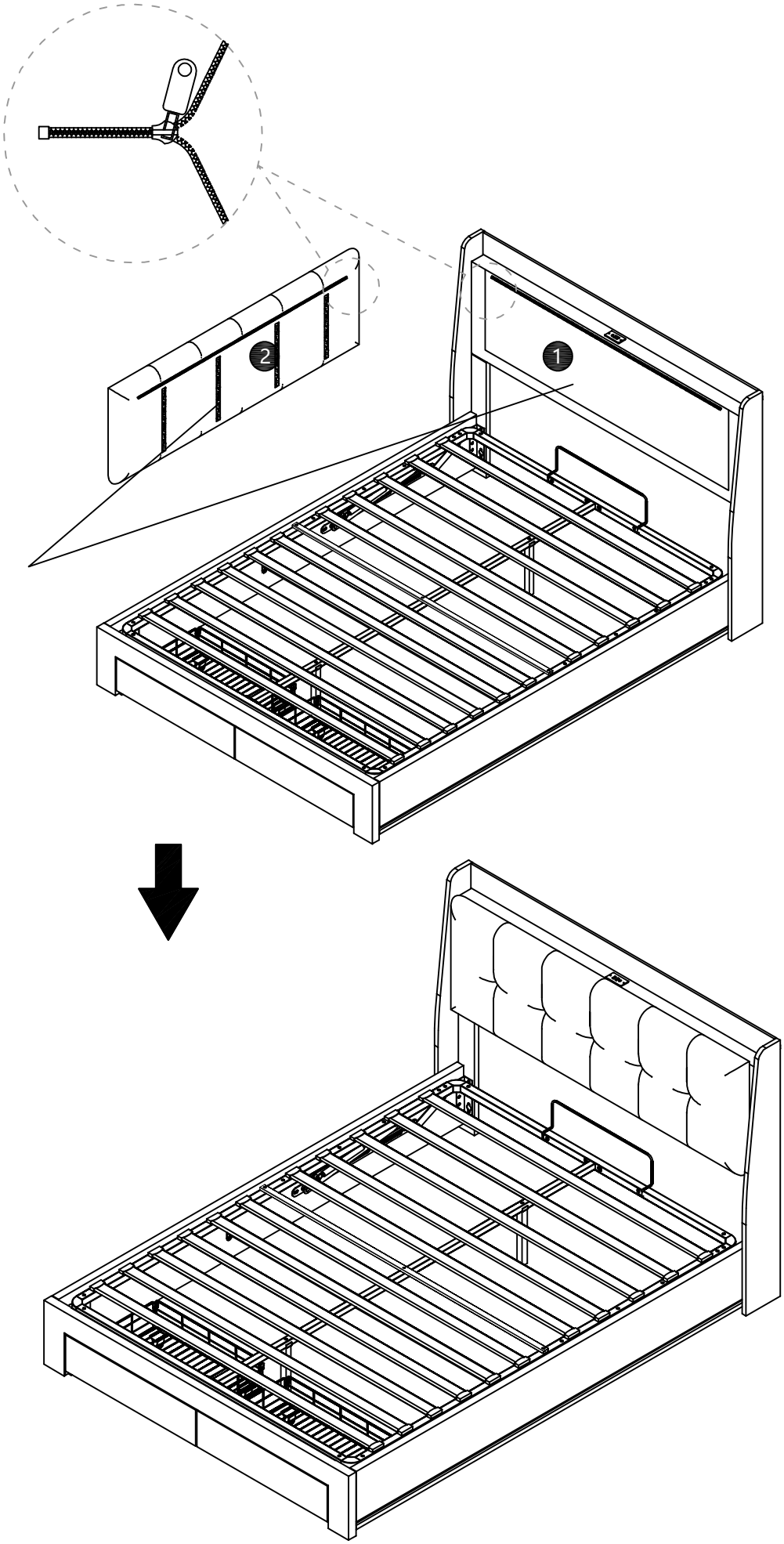

After zipping up, make sure the Velcro fits snugly

VERIFICATION OF CONFORMITY

Reference No.	:	**WTN23D07163421Z**
Applicant	:	**Guangdong Zhangong Electrical Technology Co., LTD**
Address	:	**701, Building 29, Zhifu Garden, Xingtan Town, Shunde District, Foshan City**
Manufacturer	:	**Guangdong Zhangong Electrical Technology Co., LTD**
Address	:	**701, Building 29, Zhifu Garden, Xingtan Town, Shunde District, Foshan City**
Product	:	**Furniture socket**
Model No.	:	**See model list**
Technical data	:	**250V AC, 50-60Hz 13A USB, output : 5.0V 2A 10W**

Test Standards:

BS 1363-2: 2016+A1:2018

BS EN IEC 62368-1:2020/A11:2020

The above product has been tested by us with the listed standards and found in compliance with the Electrical Equipment (Safety) Regulations 2016 of United Kingdom (S.I. 2016 No.1101). It is possible to use UKCA marking to demonstrate the compliance with the regulations.

Audio/video, information and communication technology equipment- Part 1:Safety requirements
13 A plugs, socket outlets, adaptors and connection units- Part 2: Specification for 13 A switched and unswitched
socket outlets

The referred test report(s) show that the product complies with standard(s) recognized as giving presumption of compliance with the essential requirements in the above mentioned UK regulations. Other relevant UK regulations have to be observed.

After preparation of the necessary technical documentation as well as the declaration of conformity, the UKCA marking as shown below can be affixed on the equipment under the sole responsibility of the manufacturer.

UK CA

Manager:Deval Qin
Date: 2023-9-27

The statement is based on a single evaluation of the sample of above mentioned product.It does not imply an assessment of the whole production.

Waltek Testing Group Co., Ltd.

Hotline:400-840-2288 **E-mail:info@waltek.com.cn**

Http://www.waltek.com.cn

Ver.02. 29.07.2022, WALTEK is registered trademark. Utilisation and application requires prior approval.

VERIFICATION OF CONFORMITY

Reference No.	:	**WTN23D07163421R1Z**
Applicant	:	**Guangdong Zhangong Electrical Technology Co., LTD**
Address	:	**701, Building 29, Zhifu Garden, Xingtan Town, Shunde District, Foshan City**
Manufacturer	:	**Guangdong Zhangong Electrical Technology Co., LTD**
Address	:	**701, Building 29, Zhifu Garden, Xingtan Town, Shunde District, Foshan City**
Product	:	**Furniture socket**
Model No.	:	**See model list**
Technical data	:	**250V AC, 50-60Hz 13A USB, output:5.0V 2A 10W**

Test Standards:

BS 1363-2: 2016+A1:2018

BS EN IEC 62368-1:2020/A11:2020

The above product has been tested by us with the listed standards and found in compliance with the Electrical Equipment (Safety) Regulations 2016 of United Kingdom (S.I. 2016 No.1101). It is possible to use UKCA marking to demonstrate the compliance with the regulations.

Audio/video, information and communication technology equipment- Part 1:Safety requirements
13 A plugs, socket outlets, adaptors andconnection units-Part 2: Specification for 13 A switched and unswitched
socket outlets

The referred test report(s) show that the product complies with standard(s) recognized as giving presumption of compliance with the essential requirements in the above mentioned UK regulations. Other relevant UK regulations have to be observed.

After preparation of the necessary technical documentation as well as the declaration of conformity, the UKCA marking as shown below can be affixed on the equipment under the sole responsibility of the manufacturer.

UK CA

Manager:Devail Qin
Date: 2024-07-08

The statement is based on a single evaluation of the sample of above mentioned product.It does not imply an assessment of the whole production.

Waltek Testing Group Co., Ltd.

Hotline:400-840-2288 **E-mail:info@waltek.com.cn**

Http://www.waltek.com.cn

Ver.02. 29.07.2022, WALTEK is registered trademark. Utilisation and application requires prior approval.

www.waltek.com.cn

VERIFICATION OF CONFORMITY

Attachment

Model list

WALTEK
TESTING·CERTIFICATION·INSPECTION

Reference No.:WTN23D07163421R1Z

Product name	Model name	Differences	differences
Furniture socket	ZG-JJY-1	13A 250V AC , USB output:5V 2A 10W	1-position socket without switch and USB
	ZG-JJY-1UK		1-bit socket with switch and USB
	ZG-JJY-2		2-position socket without switch and USB
	ZG-JJY-2UK		2-bit socket with switch and USB
	ZG-JJY-3		3-position socket without switch and USB
	ZG-JJY-3UK		3-bit socket with switch and USB
	ZG-JJY-4		4-position socket without switch and USB
	ZG-JJY-4UK		4-bit socket with switch and USB
	ZG-JJY-5		5-position socket without switch and USB
	ZG-JJY-5UK		5-bit socket with switch and USB
	ZG-JJY-6		6-position socket without switch and USB
	ZG-JJY-6UK		6-bit socket with switch and USB
	ZG-JJY-7		7-position socket without switch and USB
	ZG-JJY-7UK		7-bit socket with switch and USB
	ZG-JJY-8		8-position socket without switch and USB
	ZG-JJY-8UK		8-bit socket with switch and USB

======End of Attachment======

Waltek Testing Group Co., Ltd.

Hotline:400-840-2288 **E-mail:info@waltek.com.cn**

Http://www.waltek.com.cn

Ver.02. 29.07.2022, WALTEK is registered trademark. Utilisation and application requires prior approval.

Attestation of compliance Attestation of compliance Attestation of compliance

Attestation of Compliance

Declaration No.:	MK23110141P01-E01
Name and address of Applicant:	**Shenzhen Hongzhengyu Technology Co., LTD** Shenzhen baoan district rock street industrial science and technology industrial park of 2 Haitian Ianyu 3 5 floor of A
Name and address of Manufacturer:	**Shenzhen Hongzhengyu Technology Co., LTD** Shenzhen baoan district rock street industrial science and technology industrial park of 2 Haitian Ianyu 3 5 floor of A
Product name:	**RGB package**
Rated:	DC5V
Product model(s):	HZY-5050RGB-30D-90R-DC5V, HZY-5050RGB-30D-30R-DC5V, HZY-5050RGB-60D-60R-DC5V, HZY-5050RGB-60D-180R-DC5V, HZY-5050RGB-18D-18R-DC5V
Product trademark:	N/A

This Attestation of Compliance confirms that the product meets the requirements of the following standard.

BS EN IEC 55015:2019+A11:2020
IEC 61547:2020
BS EN IEC 61000-3-2:2019
BS EN 61000-3-3:2013/A2:2021

The Attestation of Compliance has been carried out in accordance with individual rules and conditions agreed with the applicant. Evaluation has been carried out in accordance with:

Test report(s) No.:	MK23110141P01-E01
Test conducted by:	TMC Testing Services (Shenzhen) Co., Ltd.
Declaration issue date:	December 5, 2023

Notes:

This Attestation of Compliance is issued according to the Great Britain legislation Electromagnetic Compatibility Regulations 2016(SI 2016 No. 1091). It confirms that the listed products complies with all essential requirements of the Regulations and applies only to the sample and its technical documentation to TMC Testing Services (Shenzhen) Co., Ltd. for testing.

After preparation of the necessary technical documentation (which must be kept for up 10 years after the product is placed on the GB market) as well as the UK Declaration of Conformity, the required UKCA marking can be affixed on the product. Other relevant Regulations have to be observed.

TMC Testing Services (Shenzhen) Co., Ltd.
t:86-755-86642861 cert@tmc-lab.com www.tmc-lab.com
1st Floor, Block A1, Zone A, Xinshidai Gongrong Industrial Park, No. 2, Shihuan Road, Shiyan Street, Baoan District, Shenzhen, China

Bauart geprüft TMC Product Safety Type approved

Lab Director
Vivian Jiang

UK CA

Attestation of Compliance

Attestation No.	:	**LCSA11254142E**
Approval Holder	:	**Dongguan Yihong Hardware Electronics Co., Ltd**
Address	:	**Room 1106, No.2, Shangheng Road, Chang'an Town, Dongguan**
Manufacturer	:	**Dongguan Yihong Hardware Electronics Co., Ltd**
Address	:	**Room 1106, No.2, Shangheng Road, Chang'an Town, Dongguan**
Brand Name	:	**N/A**
Product	:	**LED controller**
Type/Model Name	:	**YH-6183, YH-252, YH-284, YH-290, YH-287, YH-358, YH-360, YH-6180, YH-6184**
H/S Version	:	**HW: /** **SW: /**

Attestation of the technical design of the radio equipment according to the following essential requirements set out in CHAPTER 1 of the Radio Equipment Regulations 2017:
UK Radio Equipment Regulations (S.I. 2017 NO. 1206)

6.1a: Health and Safety	**Conform**
6.1b: Electromagnetic Compatibility	**Conform**
6.2: Effective Use of the Radio Spectrum	**Conform**

CE-marking

UKCA-marking

This attestation is issued in accordance with the Directive 2014/53/EU of the European Parliament and of the Council of 16 April 2014 on the harmonisation of the laws of the Member States relating to the making available on the market of radio equipment.

LCS TESTING LABORATORY APPROVED

December 16, 2024

Date of issue

Manager

Shenzhen LCS Compliance Testing Laboratory Ltd.
Room 101, 201, Building A and Room 301, Building C, Juji Industrial Park, Yabianxueziwei, Shajing Street, Bao'an District, Shenzhen, Guangdong, China
Tel: (86)0755-82591330 Fax: (86)0755-82591332
Http://www.lcs-cert.com Email: webmaster@lcs-cert.com

Annex

Applied Standards and Test Reports

Standard	Laboratory	Test Report Number
ETSI EN 301 489-1 V2.2.3 (2019-11) ETSI EN 301 489-17 V3.3.1 (2024-09) EN 55032:2015/A11:2020 EN 55035:2017/A11:2020	Shenzhen LCS Compliance Testing Laboratory Ltd.	LCSA11254142EA
ETSI EN 300 328 V2.2.2 (2019-07)	Shenzhen LCS Compliance Testing Laboratory Ltd.	LCSA11254142EB LCSA11254142EC
EN IEC 62311:2020	Shenzhen LCS Compliance Testing Laboratory Ltd.	LCSA11254142ED
BS EN IEC 62368-1:2020+A11:2020	Shenzhen LCS Compliance Testing Laboratory Ltd.	LCSA11254141S

General Remarks:

1. This conformity assessment is limited to the essential requirements of the RED Directive. Only products fulfilling all essential requirements of all applicable new approach directives may be placed on the market and put into service.
2. Products in compliance with all provisions of the applicable directives providing for the CE marking must bear this marking.
3. The manufacturer shall take all measures necessary so that the manufacturing process and its monitoring ensure conformity of the manufactured radio equipment with the approved type described in the Attestation of Compliance and with the requirements of Directive 2014/53/EU that apply to it.
4. This device also contains frequency bands that are not operational in EU member states. Only the frequency bands used in European Union have been assessed for this attestation.
5. The manufacturer shall draw up a written EU declaration of conformity for each radio equipment type and keep it at the disposal of the national authorities for 10 years after the radio equipment has been placed on the market. The EU declaration of conformity shall identify the radio equipment type for which it has been drawn up. A copy of the EU declaration of conformity shall be made available to the relevant authorities upon request.

Shenzhen LCS Compliance Testing Laboratory Ltd.
Room 101, 201, Building A and Room 301, Building C, Juji Industrial Park, Yabianxueziwei, Shajing Street, Bao'an District, Shenzhen, Guangdong, China
Tel: (86)0755-82591330 Fax: (86)0755-82591332
Http://www.lcs-cert.com Email: webmaster@lcs-cert.com

Importer	COMHARBOR LIMITED
Add	Unit C,Swit Point,Cosford Lane,Rugby,CV211PY,GB
Email/URL	harborcomhar@gmail.com
Manufacturer	Dongguan Yihong Hardware Electronics Co.. Ltd
Add	Room 1106.No.2,Shangheng Road, Chang an Town
Email/URL	414564409@qq.com
Product identification	202507
Made in	China
Produt Name: LED Controller Model:YH-252	
Rated voltage: 5 V Rated frequency:50/60Hz Power:15W	
UK REP	COMHARBOR LIMITED Unit C,Swit Point,Cosford Lane,Rugby,CV211PY,GB harborcomhar@gmail.com

Importer	COMHARBOR LIMITED
Add	Unit C,Swit Point,Cosford Lane,Rugby,CV211PY,GB
Email/URL	harborcomhar@gmail.com
Manufacturer	Foshan Xinwang Intelligent Technology Co., Ltd.
Add	The fifth floor of Building 3, Haitian Lanyu Science and Technology Industrial Park, No. 5, Industrial 2nd Road, Shilongzi Community, Shiyan Street, Bao'an District, Shenzhen
Email/URL	610488898@qq.com
Product identification	202507
Made in	China
Produt Name: LED soft light strip Model:HZY-5050RGB-60D-5V	
Rated voltage: 5 V Rated frequency:50/60Hz Power:4.5W/M	
UK REP	COMHARBOR LIMITED Unit C,Swit Point,Cosford Lane,Rugby,CV211PY,GB harborcomhar@gmail.com

Importer	COMHARBOR LIMITED
Add	Unit C,Swit Point,Cosford Lane,Rugby,CV211PY,GB
Email/URL	harborcomhar@gmail.com
Manufacturer	Guangdong Zhangong Eledtrical Technology Co. LTD
Add	701,Building 29, hifu Garden, Xingtan Town, ShundeDistrict， Foshan City
Email/URL	info@waltek.com.cn
Product identification	202507
Made in	China
UK REP	COMHARBOR LIMITED Unit C,Swit Point,Cosford Lane,Rugby,CV211PY,GB harborcomhar@gmail.com