Coffee Table

Assembly Instructions - Please keep for future reference

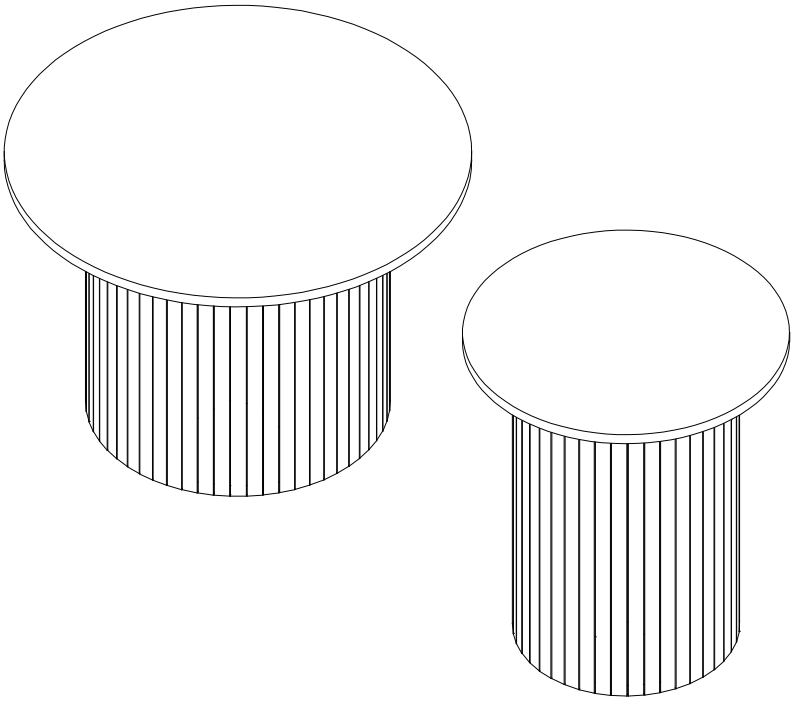

Dimensions
Width - 23.6inch
Depth - 23.6inch
Height - 16.1inch

Dimensions
Width - 16.5inch
Depth - 16.5inch
Height - 18.9inch

Any question please feel free to contact us:
support@amer-life.com TEL:(901) 347-2181.
We will provide further assistance within 24 hours.

Important – Please read these instructions fully before starting assembly

Issue 1 - 24/10/2024

Safety and Care Advice

Important – Please read these instructions fully before starting assembly

• Check you have all the components and tools listed on the following pages.

• Remove all fittings from the plastic bags and separate them into their groups.

• Keep children and animals away from the work area, small parts could choke if swallowed.

• Make sure you have enough space to layout the parts before starting.

• During assembly do not stand or put weight on the product, this could cause damage.

• Assemble the item as close to its final position (in the same room) as possible.

• Assemble on a soft level surface to avoid damaging the unit or your floor.

• Parts of the assembly will be easier with 2 people.



• To reduce the likelihood of damaging your product please ensure that your power drill is set on a low torque setting.

Care and maintenance

• Only clean using a damp cloth and mild detergent, do no use bleach or abrasive cleaners.

• From time to time check that there are no loose screws on this unit.

• This product should not be discarded with household waste. Take to your local authority waste disposal centre.

Handy Hints

• Assemble all parts and bolts loosely during assembly, only once the product is complete should you fully tighten the bolts

• Regularly check and ensure that all bolts and fittings are tightend properly.

Components - Fittings

Please check you have all the fittings listed below

Note: The quantities below are the correct amount to complete the assembly. In some cases more fittings may be supplied than are required.

A  8*30mm Wooden Dowel x 16	**B**  5*40mm Screw x 16	**C**  6*25mm Bolt x 8
D  Allen Key x 1	**E**  Felt Pad x 8	

Tools required

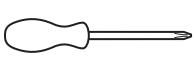

Phillips screwdriver
(medium & large)

Ruler - Use this ruler to help correctly identify the screws

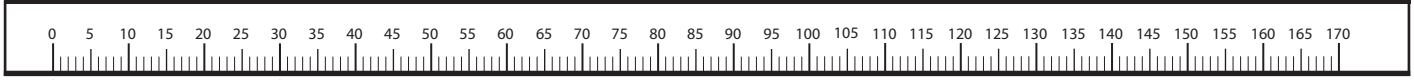

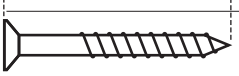

The screws length is measured from the head to the point (30mm screw shown).

Components - Panels

Please check you have all the panels listed below

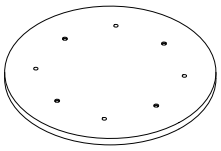

1 (Ø38.5 x 1.5cm) x1

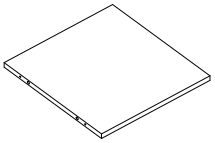

2 (38.3 x 36.5 x 1.5cm) x1

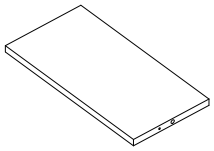

3 (18.4 x 36.5 x 1.5cm) x2

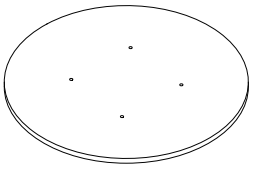

4 (Ø60 x 1.5cm) x1

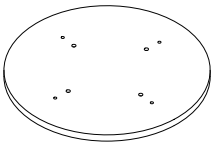

5 (Ø38.5 x 1.5cm) x1

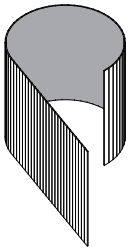

6 (39.4 x 122.4 x 0.47cm) x1

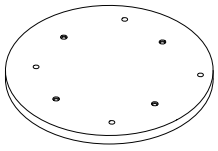

7 (Ø28.5 x 1.5cm) x1

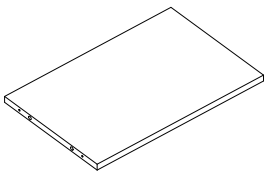

8 (28.3 x 43.5 x 1.5cm) x1

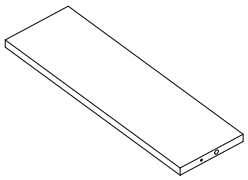

9 (13.4 x 43.5 x 1.5cm) x2

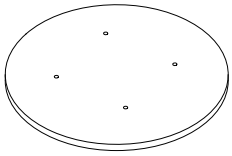

10 (Ø42 x 1.5cm) x1

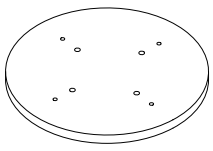

11 (Ø28.5 x 1.5cm) x1

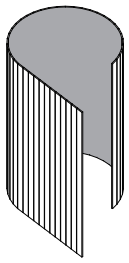

12 (46.4 x 90.8 x 0.47cm) x1

Assembly Instructions

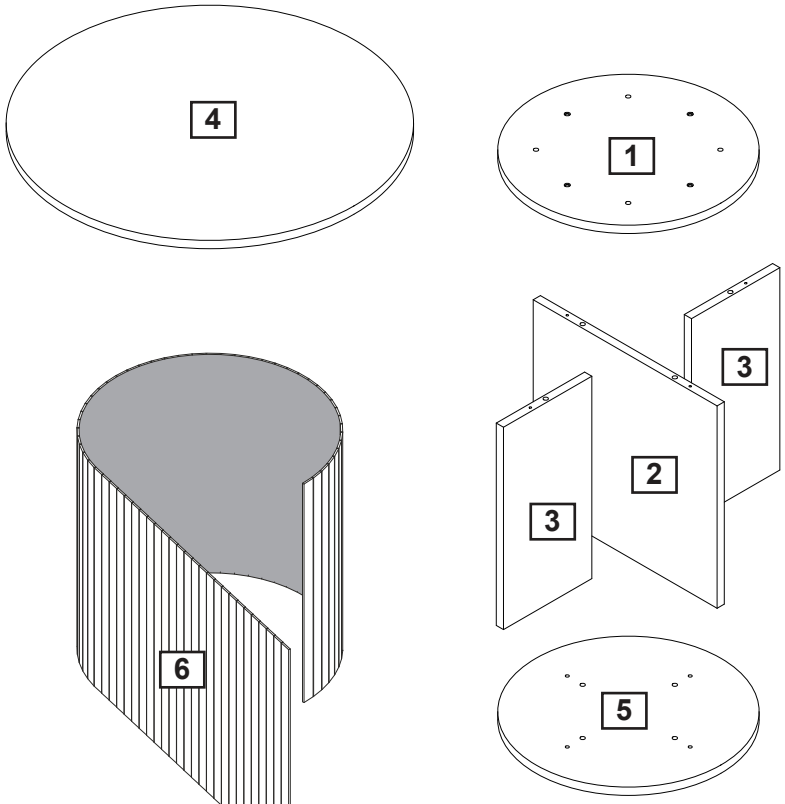

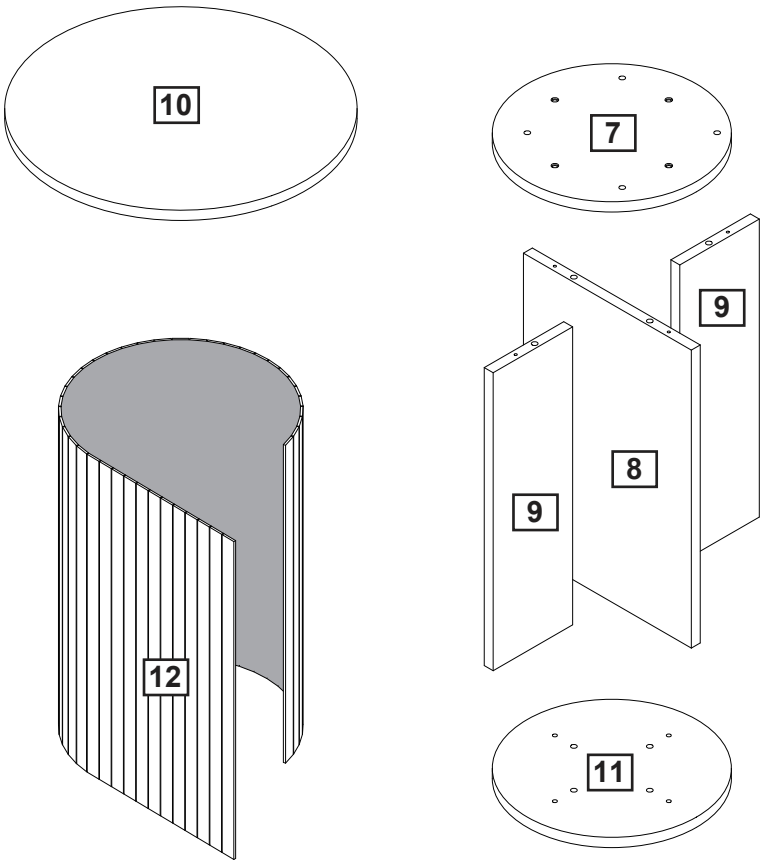

Assembly Instructions

Step 1

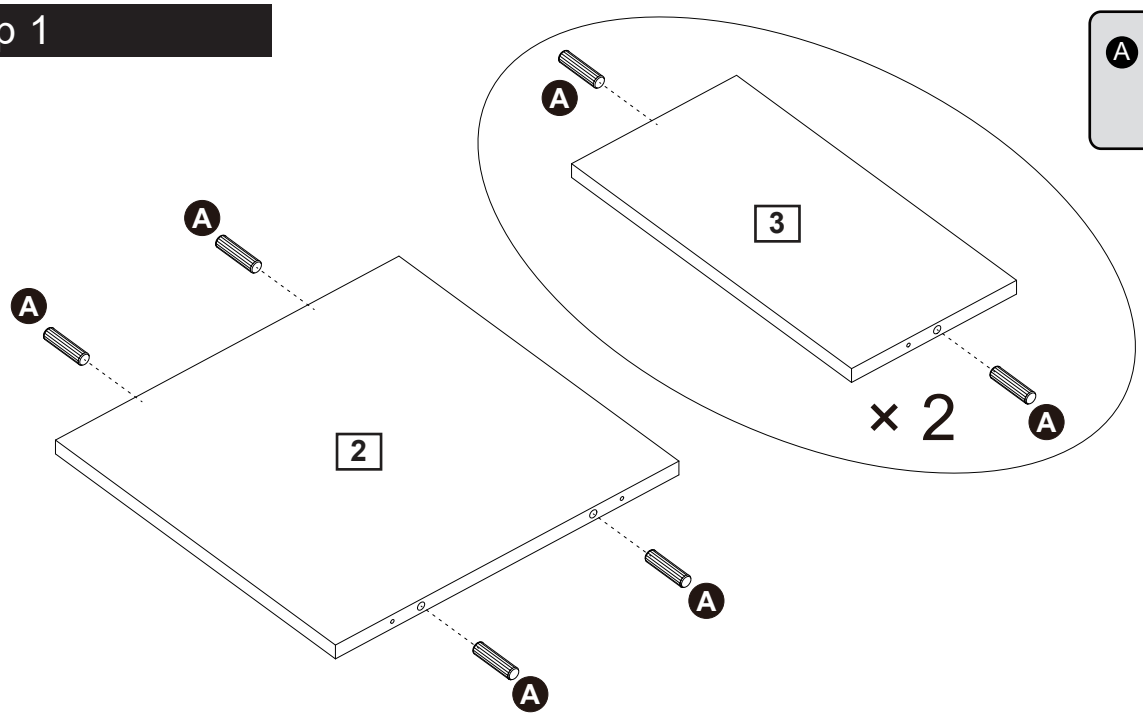

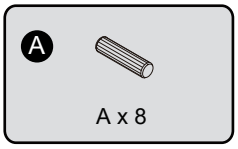

Insert wooden dowel (A) into part (2, 3).

Step 2

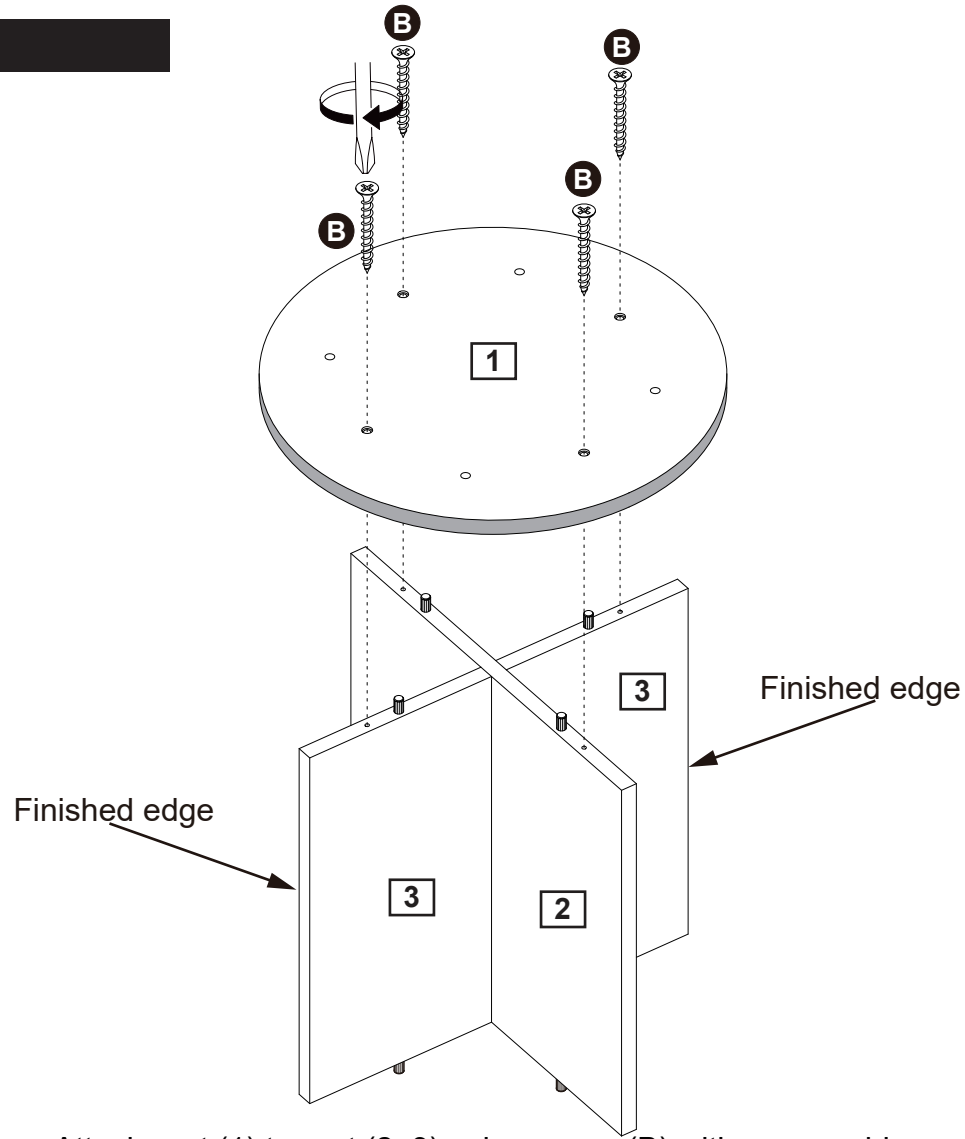

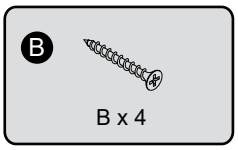

Attach part (1) to part (2, 3) using screw (B) with a screwdriver.

Assembly Instructions

Step 3

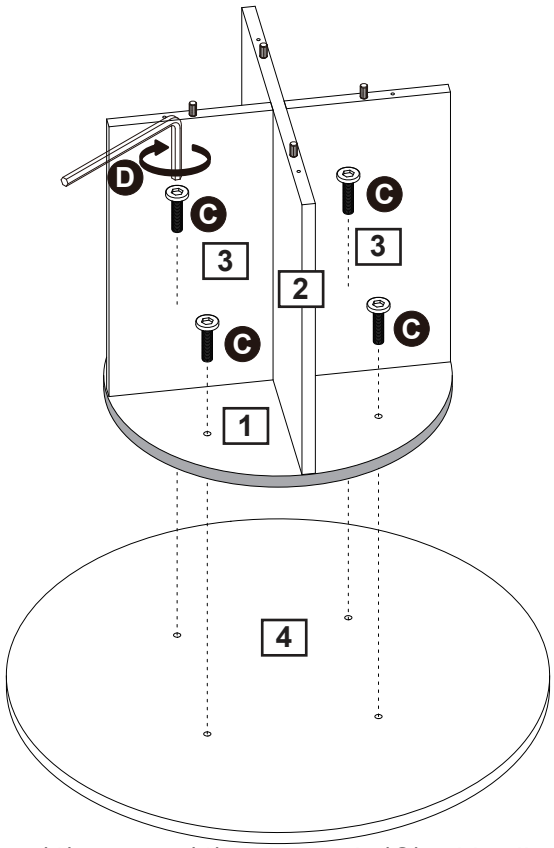

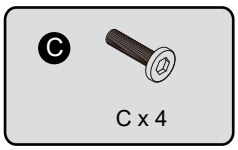

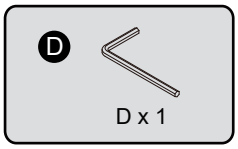

Attach part (1) to part (4) using bolt (C) with allen key (D).

Step 4

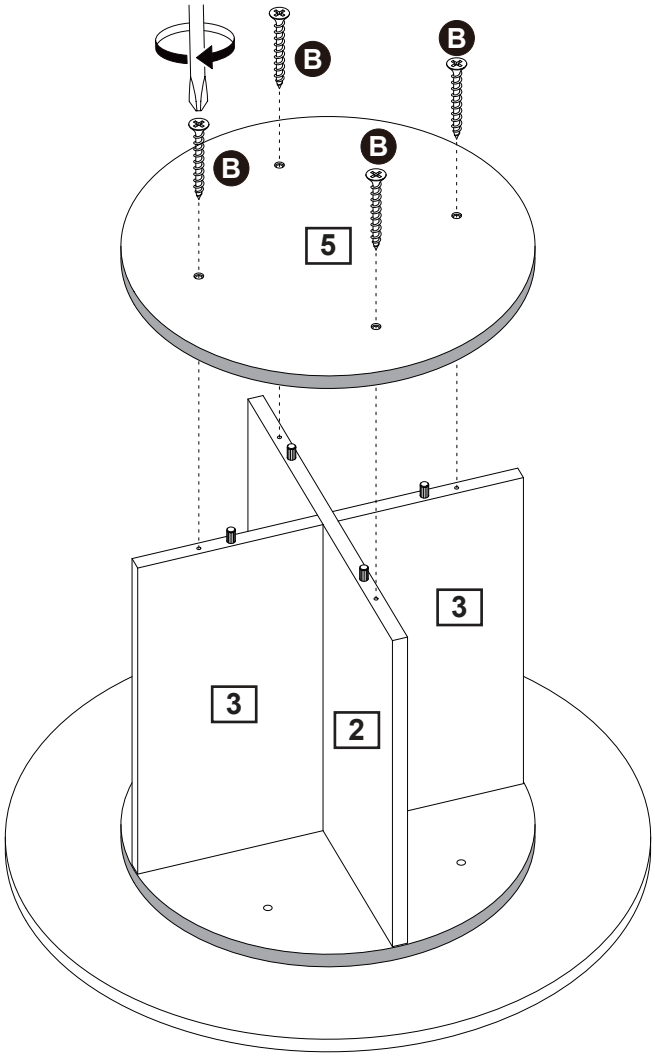

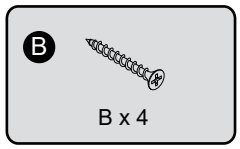

Attach part (5) to part (2, 3) using screw (B) with a screwdriver.

Assembly Instructions

Step 5

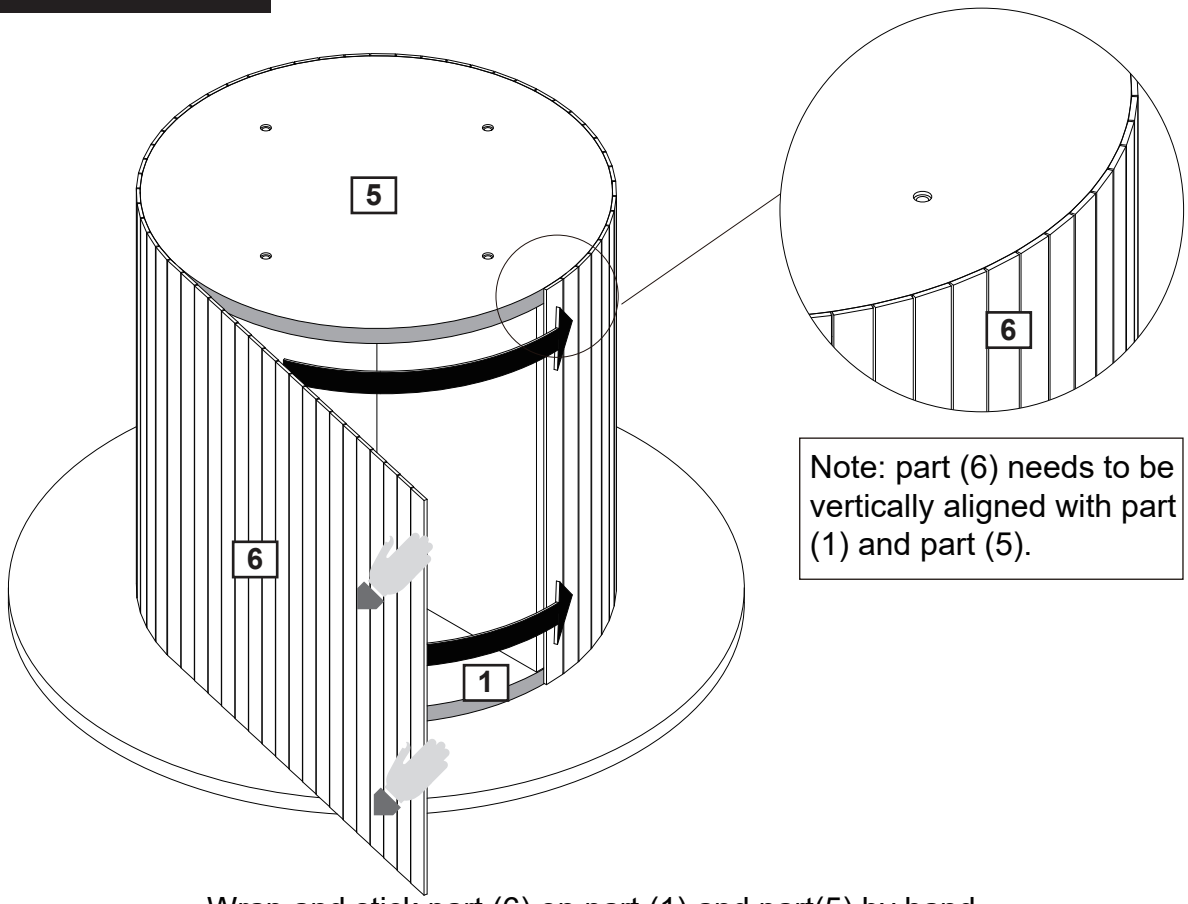

Note: part (6) needs to be vertically aligned with part (1) and part (5).

Wrap and stick part (6) on part (1) and part(5) by hand.

Step 6

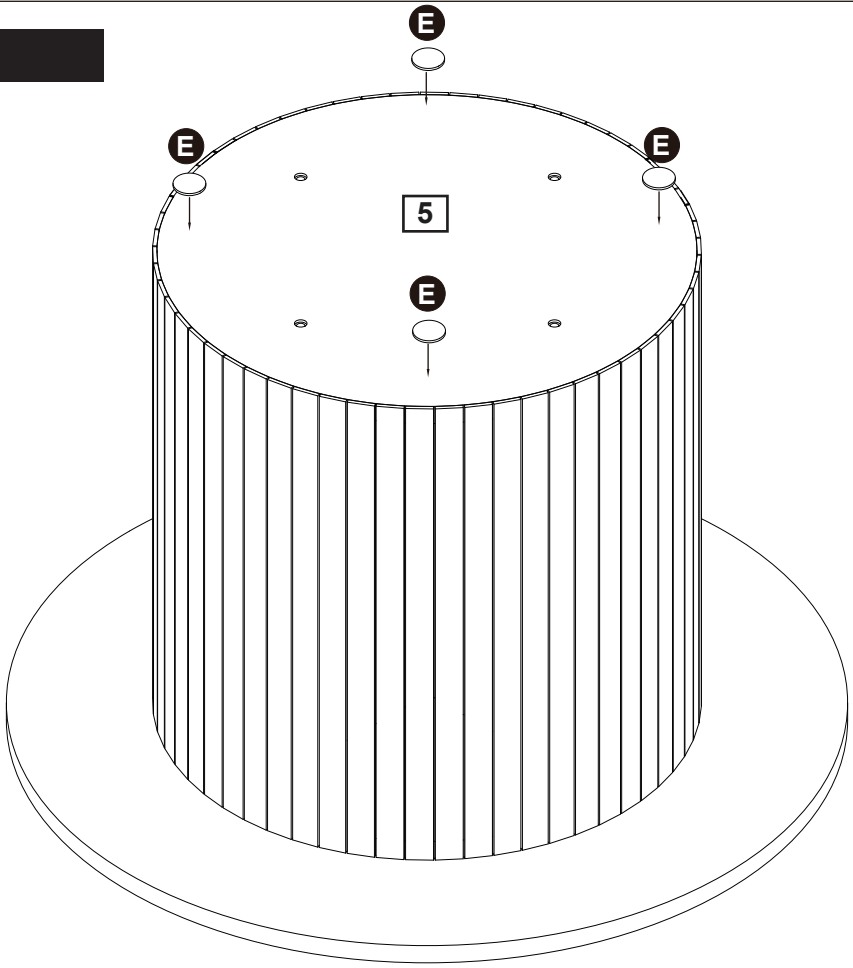

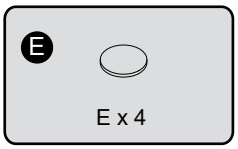

Attach felt pads (E) to part (5).

Assembly Instructions

Step 7

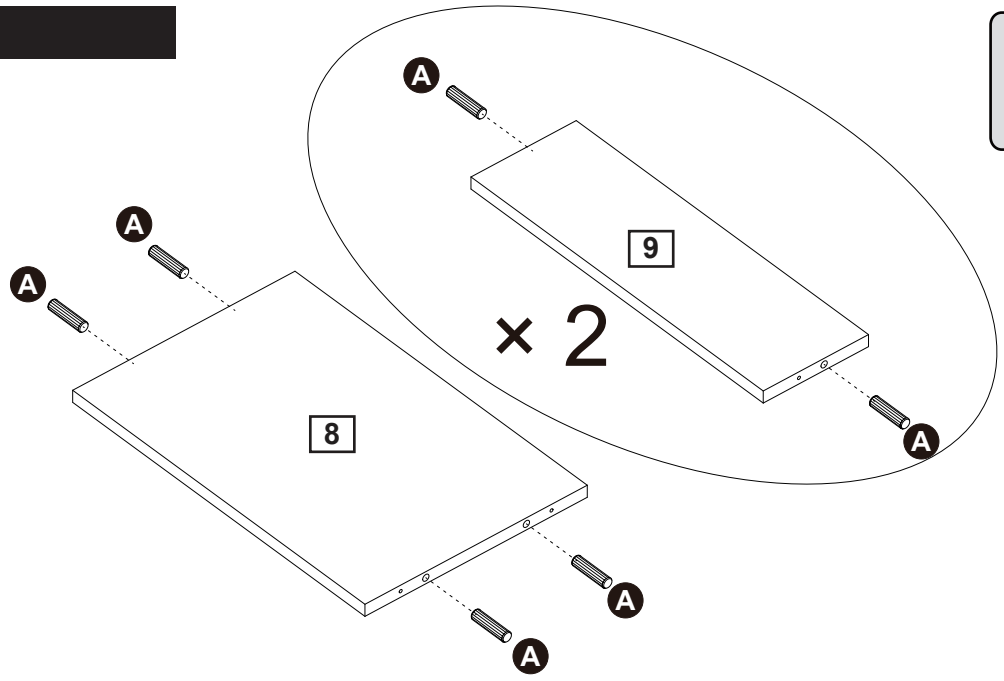

Insert wooden dowel (A) into part (8, 9).

Step 8

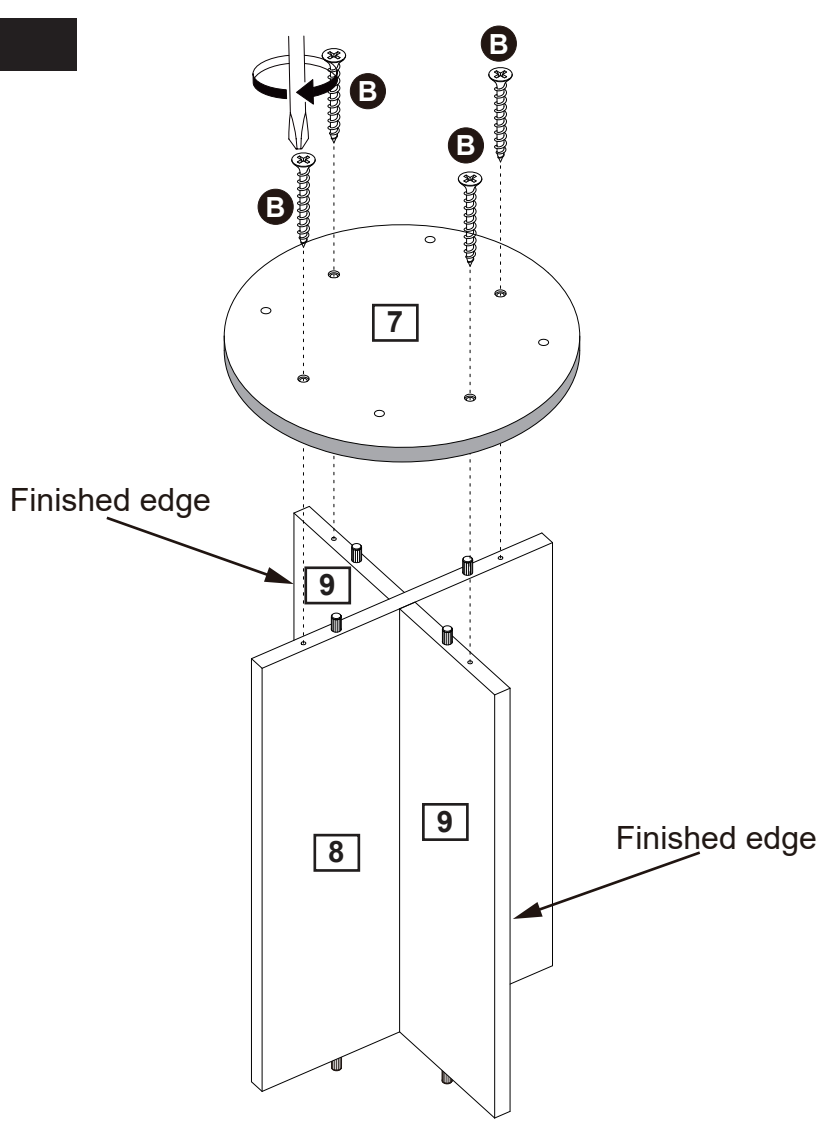

Attach part (7) to part (8, 9) using screw (B) with a screwdriver.

Assembly Instructions

Step 9

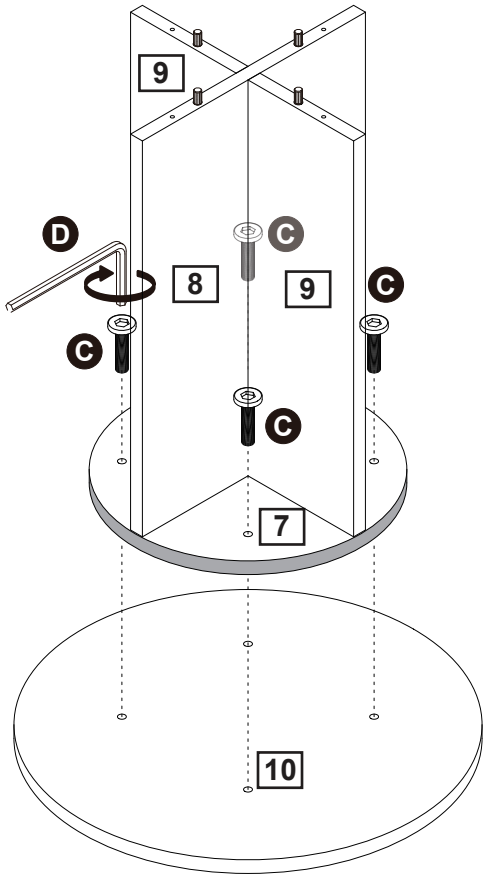

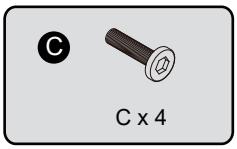

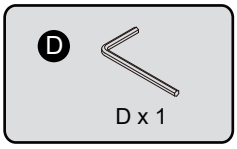

Attach part (7) to part (10) using bolt (C) with allen key (D).

Step 10

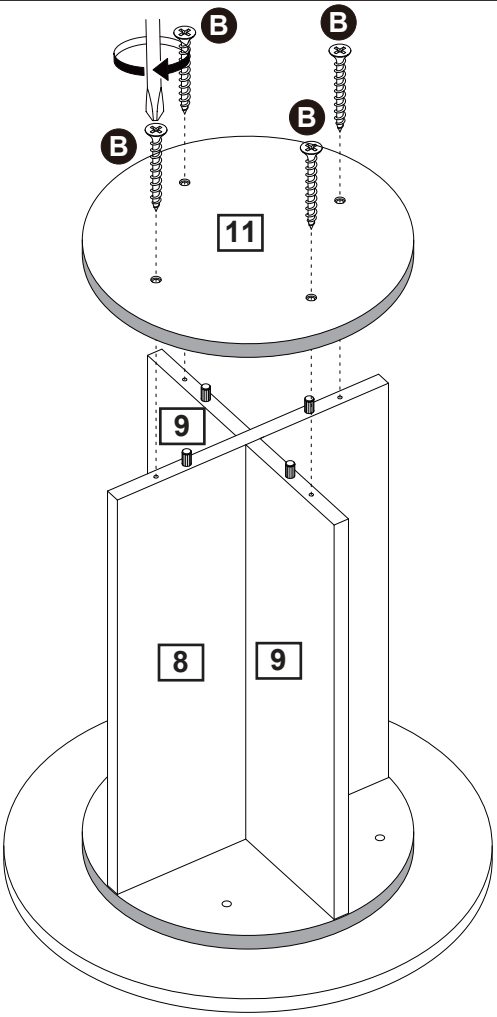

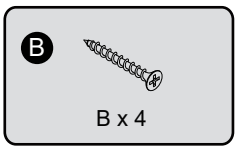

Attach part (11) to part (8, 9) using screw (B) with a screwdriver.

Assembly Instructions

Step 11

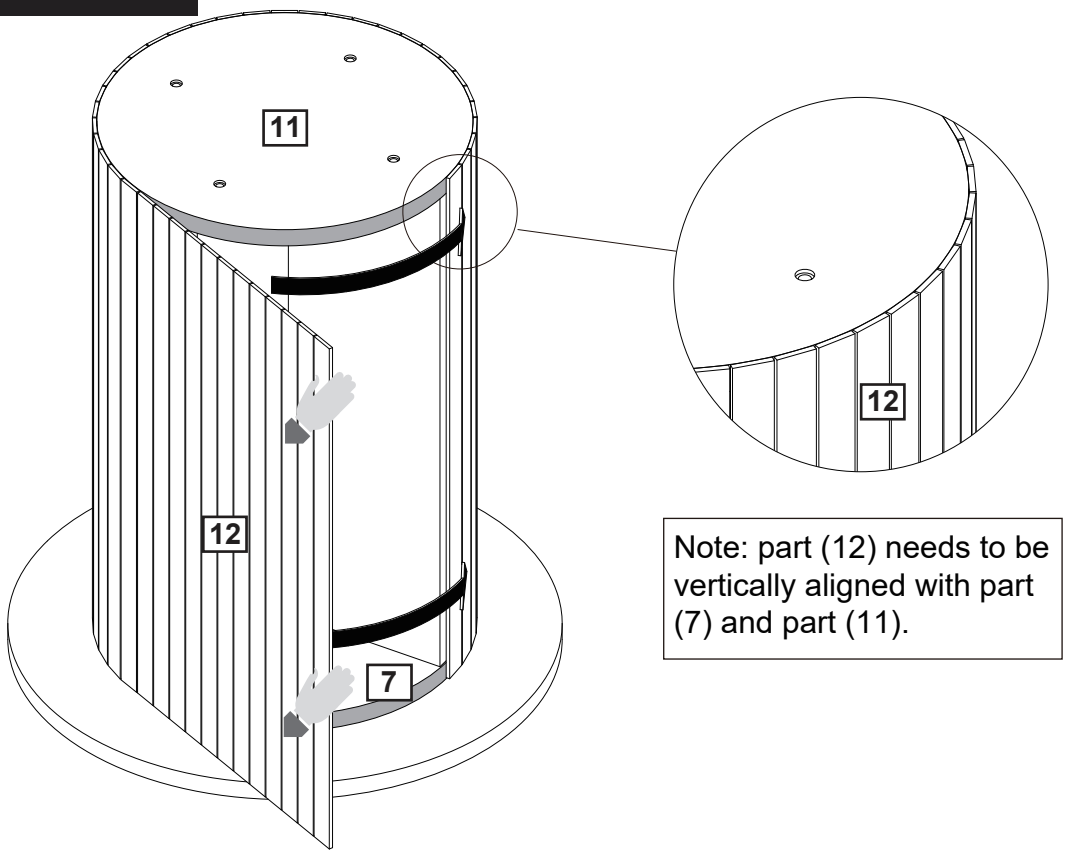

Note: part (12) needs to be vertically aligned with part (7) and part (11).

Wrap and stick part (12) on part (7) and part(11) by hand.

Step 12

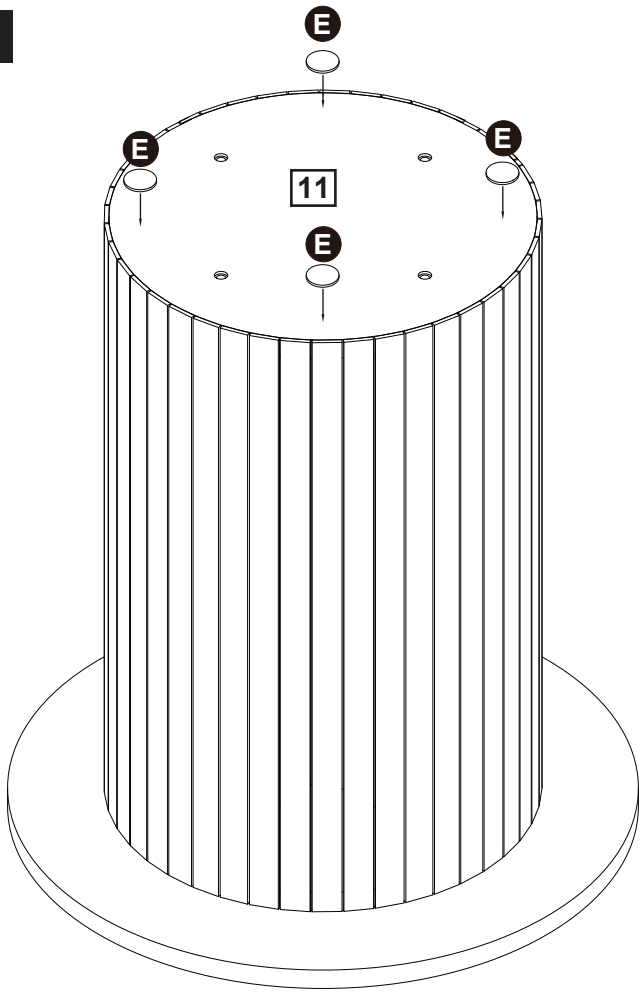

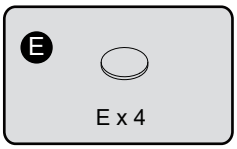

Attach felt pads (E) to part (11).

Assembly Instructions

Step 13

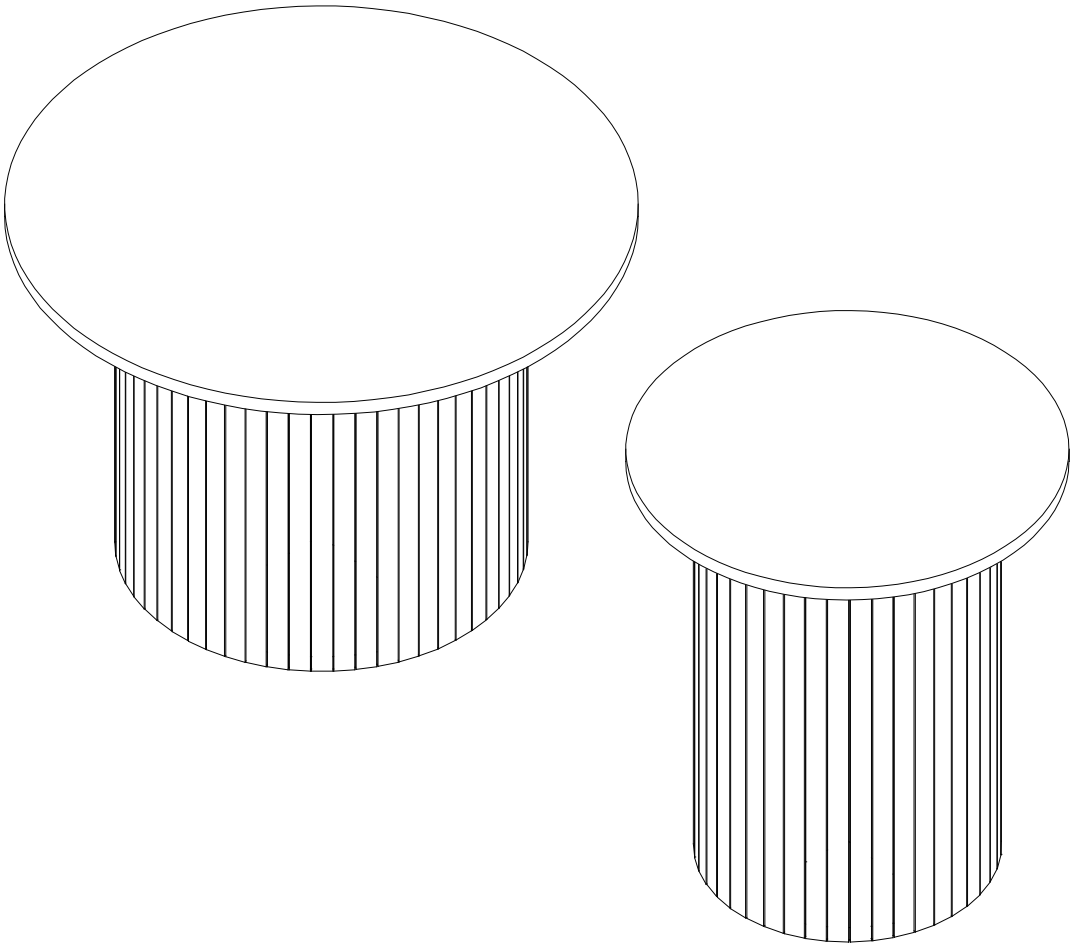

Assembly is complete