furniturebox

DELPHINE

Small TV Unit

Assembly Guide

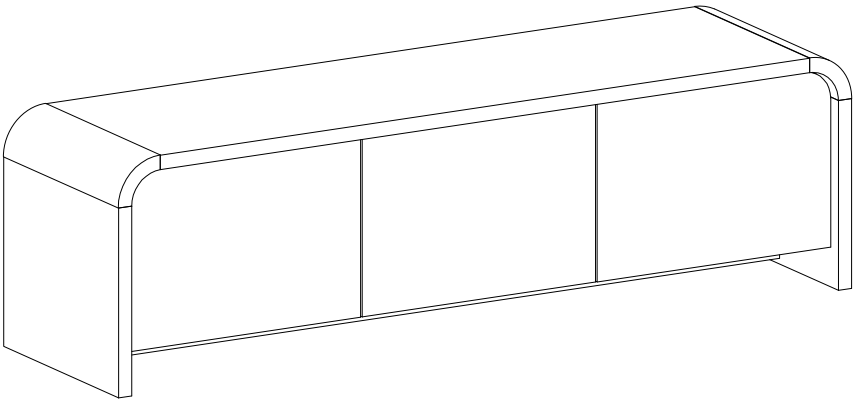

furniturebox

IMPORTANT: please read these instructions fully before starting assembly



SAFETY AND CARE ADVICE



NO POWER TOOLS

- Check you have all the components and tools listed
- Remove all fittings from their bags and separate into groups
- We do not recommend use of power tools - this could damage the unit. Only use hand screwdrivers and Allen keys
- Keep children and animals away from the work area, small parts could cause choking if swallowed
- Make sure you have enough space to lay out the parts before starting
- Assemble the item as close to its final position (same room) as possible
- Do not over tighten the nuts to avoid damage to the threads
- Only clean using a damp cloth and mild detergent. Do not use bleach or abrasive cleaners
- Do not allow children to climb or play on this product From time to time, check there are no loose screws in this unit
- This product should not be discarded with household waste. Take to your local authority waste disposal centre
- Unless otherwise stated, this product is designed for domestic use and is not certified for commercial or contract settings

furniturebox

IMPORTANT INFORMATION



60 Minute Build



Two Person Build



Max Weight Capacity 40kg

Note: Assembly estimates are approximate and can differ based on the specific environment and user experience.

furniturebox

WHAT'S IN THE BOX

Note: the quantities are the correct amount to complete the assembly. In some cases more fixings may be supplied than are required.

Getting to know your product:

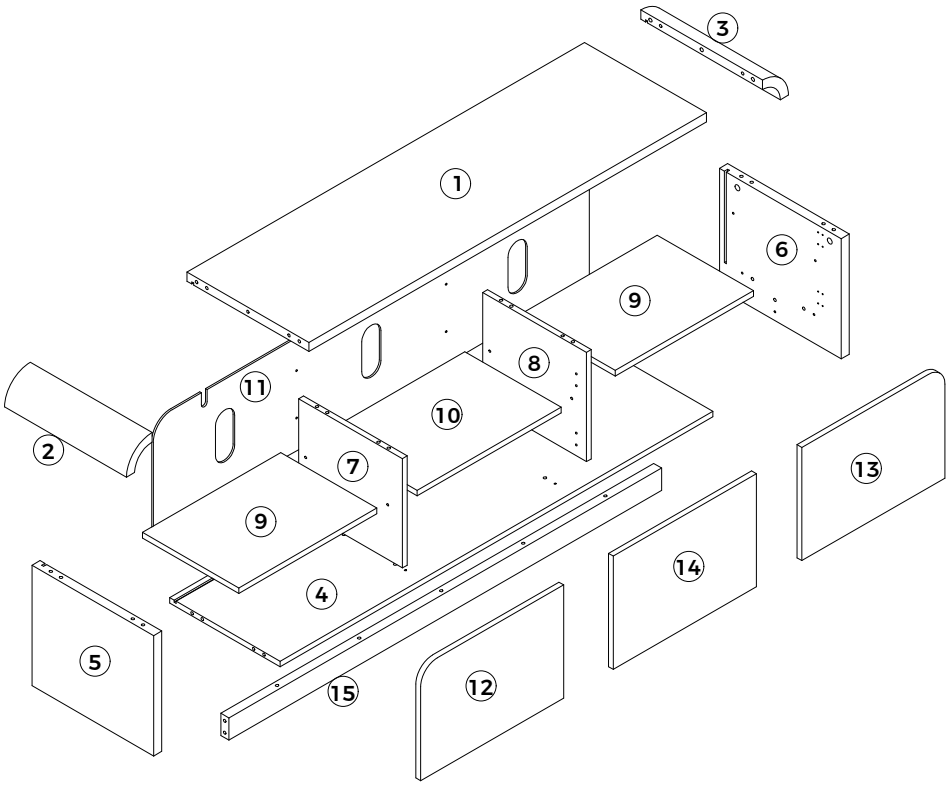

furniturebox

WHAT'S IN THE BOX

Note: the quantities are the correct amount to complete the assembly. In some cases more fixings may be supplied than are required.

Parts Key:

Label	Part Name	Image / Drawing	Quantity
1	Top Panel	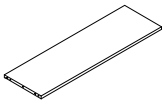	1
2	Left Corner Rail	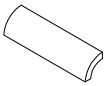	1
3	Right Corner Rail	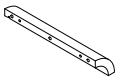	1
4	Bottom Panel	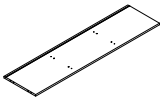	1
5	Left Side Panel	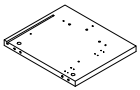	1
6	Right Side Panel	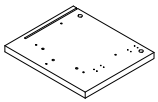	1
7	Left Divider Panel	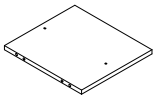	1
8	Right Divider Panel	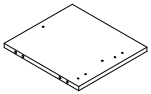	1

Label	Part Name	Image / Drawing	Quantity
9	Side Shelf	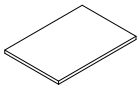	2
10	Middle Shelf	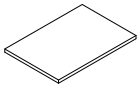	1
11	Back Panel	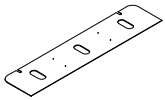	1
12	Left Side Door	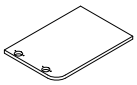	1
13	Right Side Door	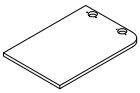	1
14	Middle Door	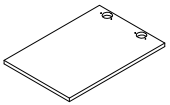	1
15	Bottom Rail	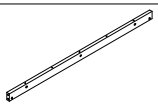	1

furniturebox

WHAT'S IN THE BOX

Note: the quantities are the correct amount to complete the assembly. In some cases more fixings may be supplied than are required.

Hardware Key:

Label	Hardware Description	Image / Drawing	Size(mm)	Quantity
A	Cam Bolt		ø7x34	25
B	Cam Nut		ø15x12	25
C	Dowel		ø8x30	14
D	Dowel		ø10x40	6
K	Metal Plate		35x18x2mm	4
L	Screw		ø3.5x15mm	8
M	Felt Pad		ø20x5mm	4
N	L-Bracket	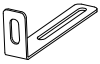	80x30x15mm	2
P	Screw		ø4x14mm	4
Q	Wedge		14x13x10mm	6

furniturebox

WHAT'S IN THE BOX

Note: the quantities are the correct amount to complete the assembly. In some cases more fixings may be supplied than are required.

Hardware Key:

Label	Hardware Description	Image / Drawing	Size(mm)	Quantity
R	Screw		ø3x19	10
S	Hinge	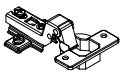	ø35	2
T	Large Hinge	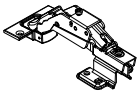	ø35	4
U	Screw		ø4x15	28
V	Push-Open			3
W	Screw		ø3.5x12mm	6
Y	Shelf Pin		ø6.5x16	12
Z	Cover		ø25x1	8

furniturebox

STEP 1

Insert 8 x small dowels [C] to Bottom panel [4] and Bottom rail [15] as shown. If needed use a mallet to gently tap the dowels into place. Screw 7 x cam bolts [A] into Bottom panel [4] as shown, tighten with a Phillips head screwdriver.

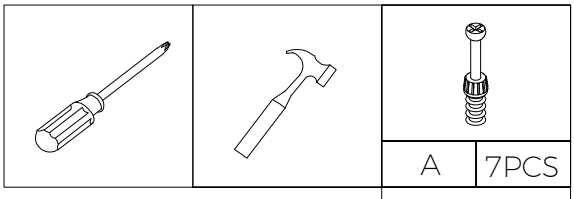

A	7PCS
C	8PCS

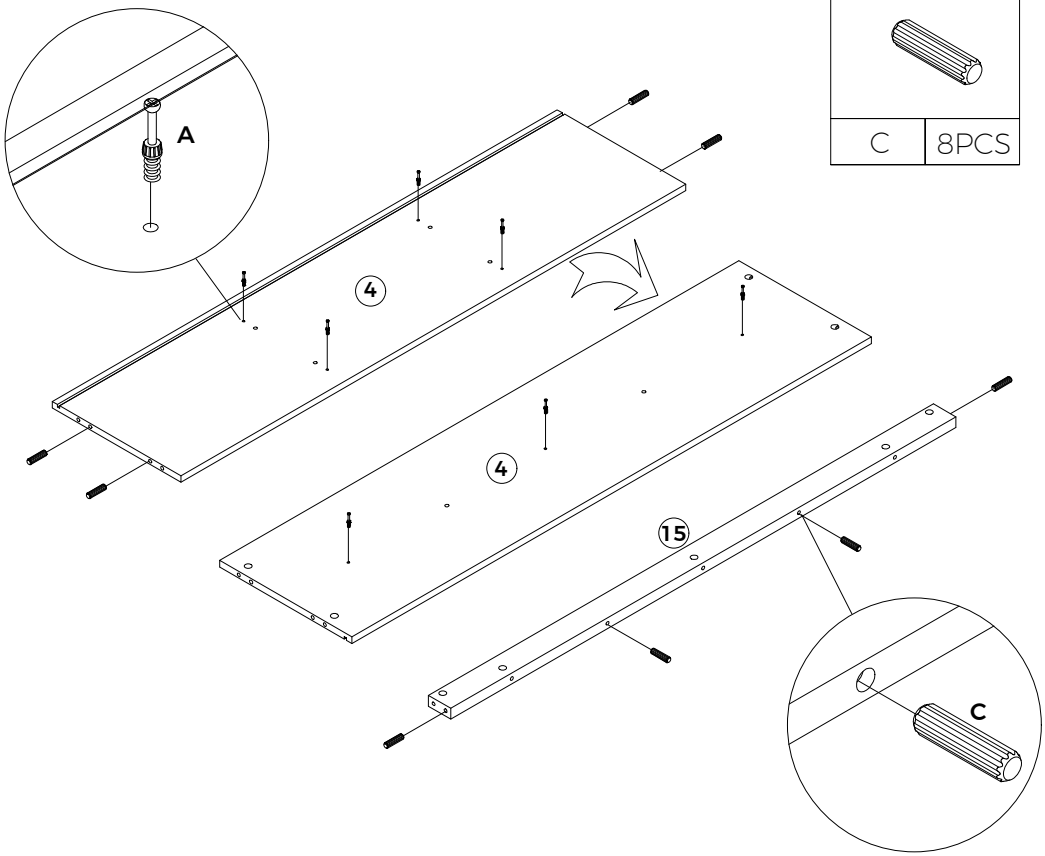

furniturebox

STEP 2

Attach Bottom rail [15] onto Bottom panel [4] as shown.
Insert 3 x cam nuts [B] into Bottom rail [15]. Turn cam nuts clockwise to lock using a flat head screwdriver.

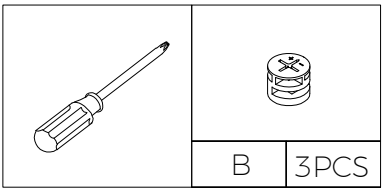

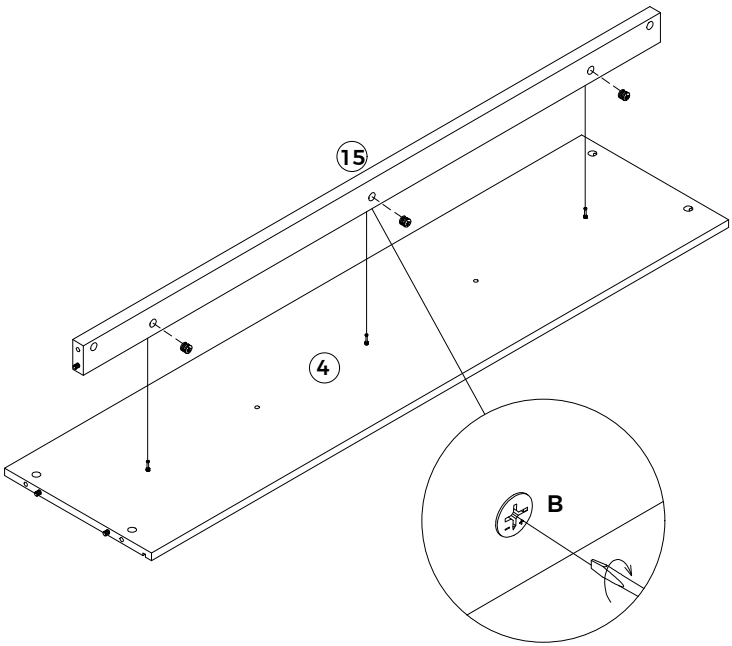

furniturebox

STEP 3

Insert 4 x small dowels [C] to Side panels [5] & [6] as shown.
Screw 6 x cam bolts [A] into Side panels [5] & [6] as shown.
Attach 4 x felt pads [M] to Side panels [5] & [6] as shown.

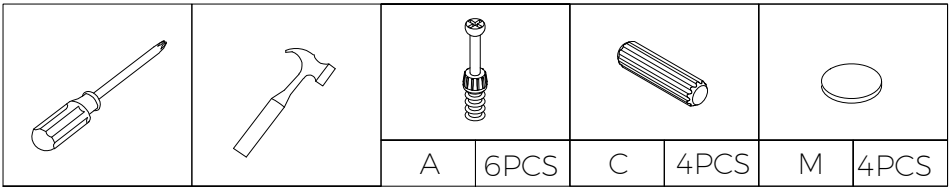

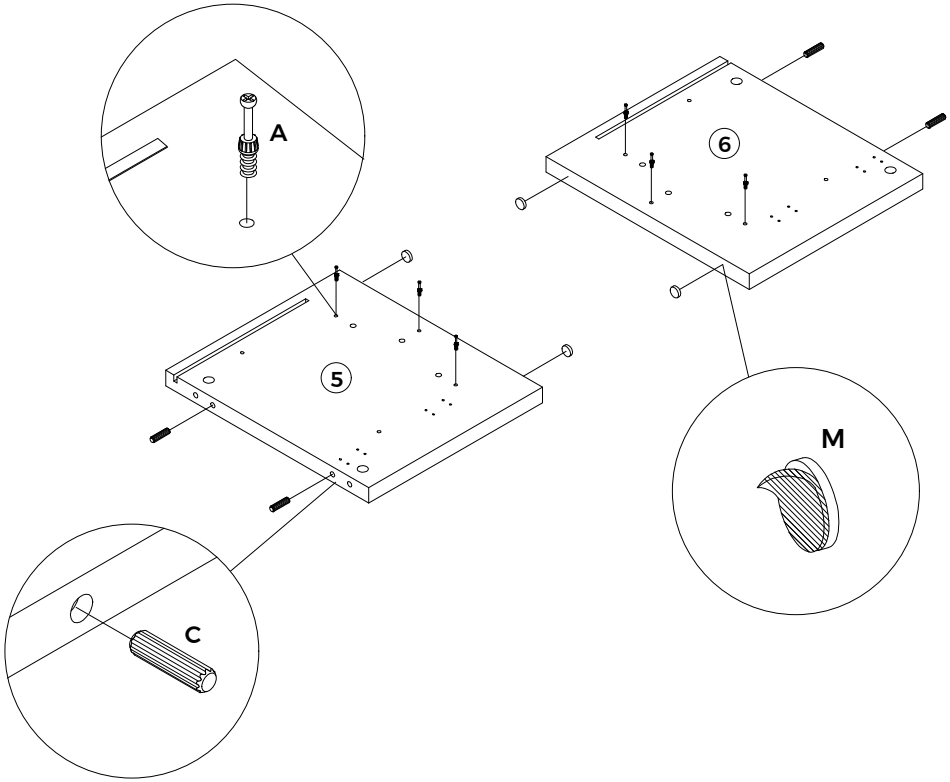

furniturebox

STEP 4

Attach Side panels [5] & [6] onto Bottom panel [4] and Bottom rail [15] as shown.
Insert 6 x cam nuts [B] into Bottom rail [15] and Bottom panel [4] as shown, turn cam nuts clockwise to lock using a flat head screwdriver.

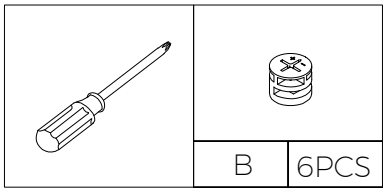

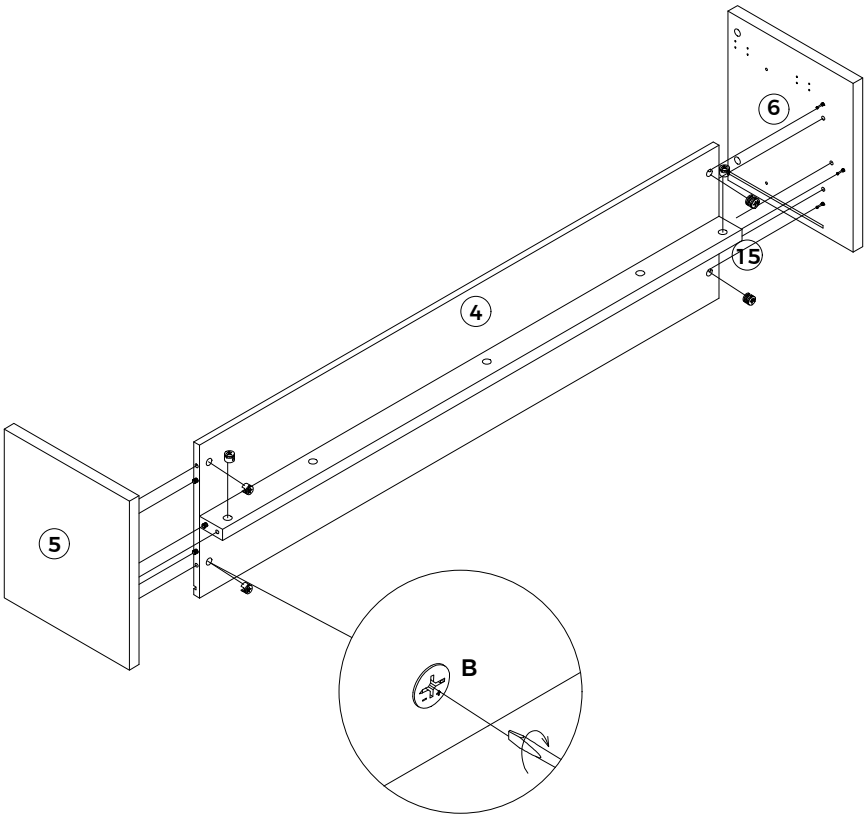

furniturebox

STEP 5

Insert 8 x small dowels [C] to Divider panels [7] & [8] as shown.

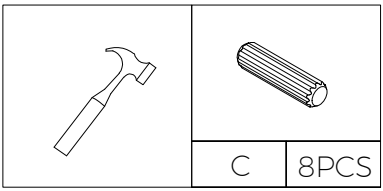

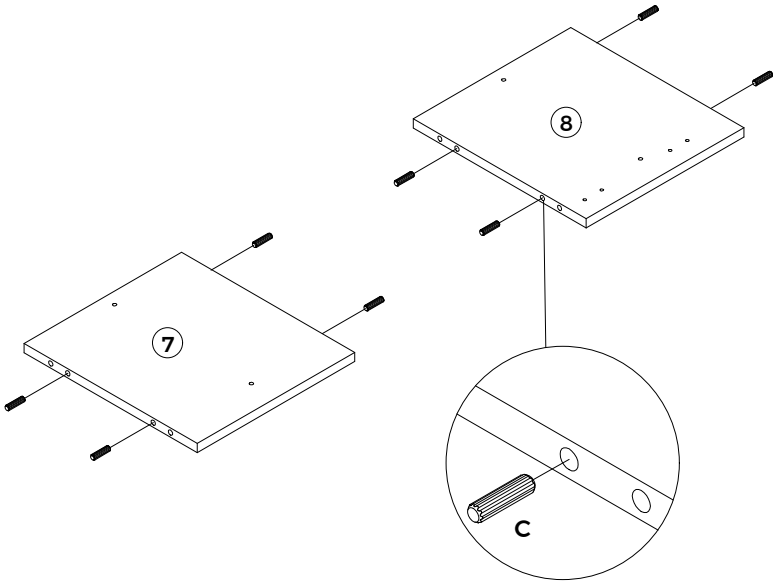

furniturebox

STEP 6

Attach Divider panels [7] & [8] onto Bottom panel [4] as shown.
Insert 4 x cam nuts [B] into Divider panels [7] & [8] as shown,
tight with a flat head screwdriver.

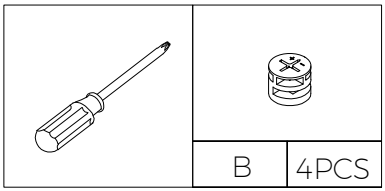

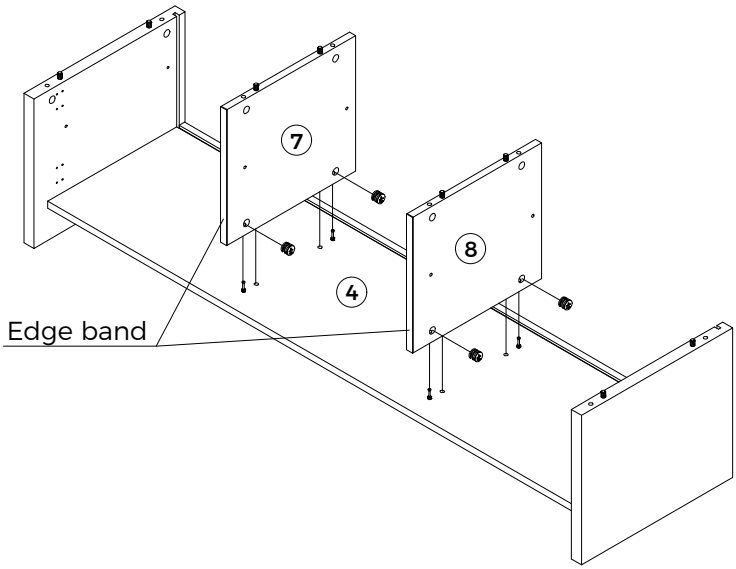

furniturebox

STEP 7

Slot in Back panel [11] into the grooves on side panels and bottom panel as shown. Ensure Back panel [11] is fully slotted into the grooves.

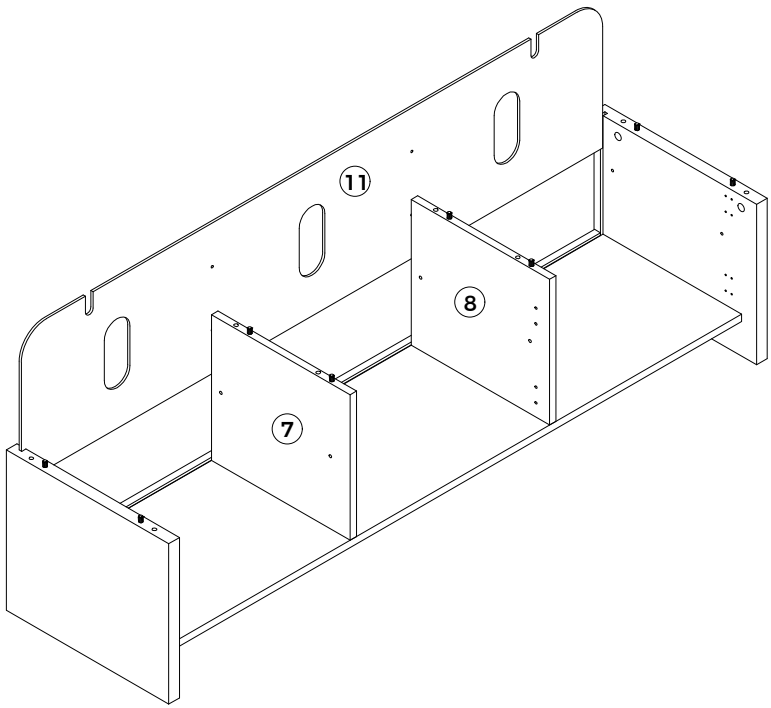

furniturebox

STEP 8

Insert 6 x large dowels [D] to Top panel [1] as shown.
Screw 4 x cam bolts [A] into Top panel [1] as shown.
Attach 2 x L-brackets [N] to Top panel [1] with 4 x screws [P] using a Phillips head screwdriver.

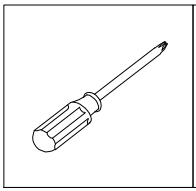
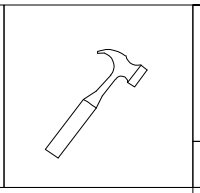
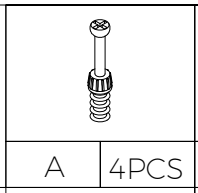
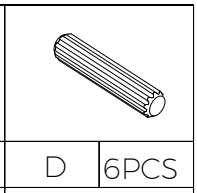

A	4PCS	D	6PCS
N	2PCS	P	4PCS

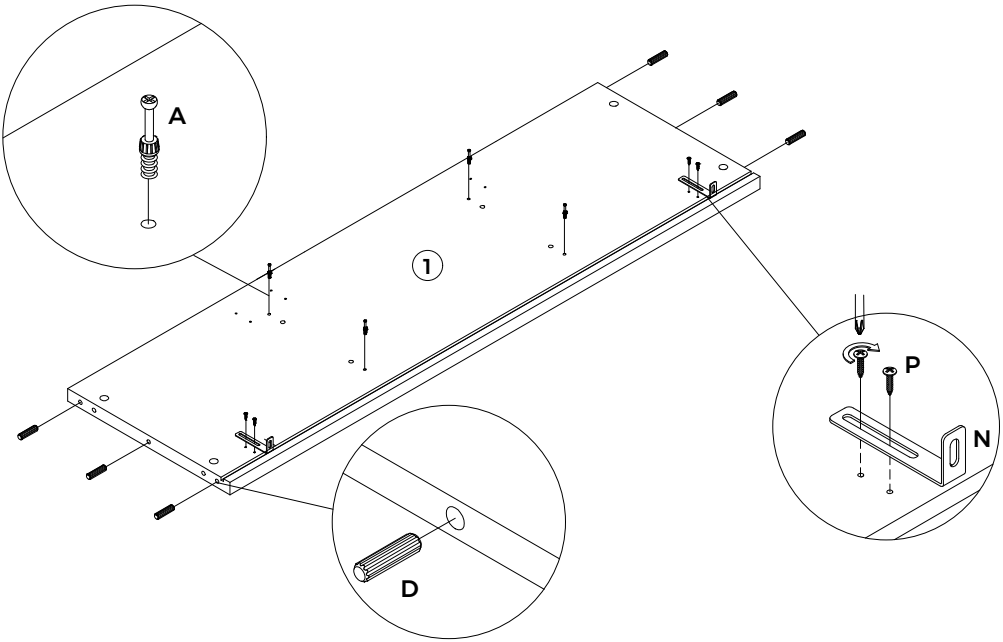

furniturebox

STEP 9

Attach 3 x Push-open [V] to Top panel [1] using 6 x screws [W] with a Phillips Head Screwdriver.

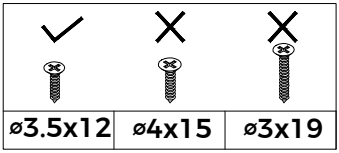

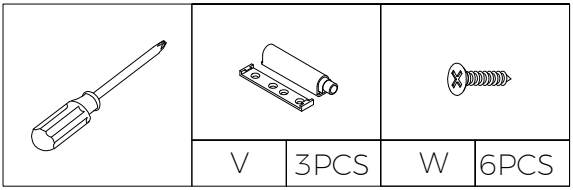

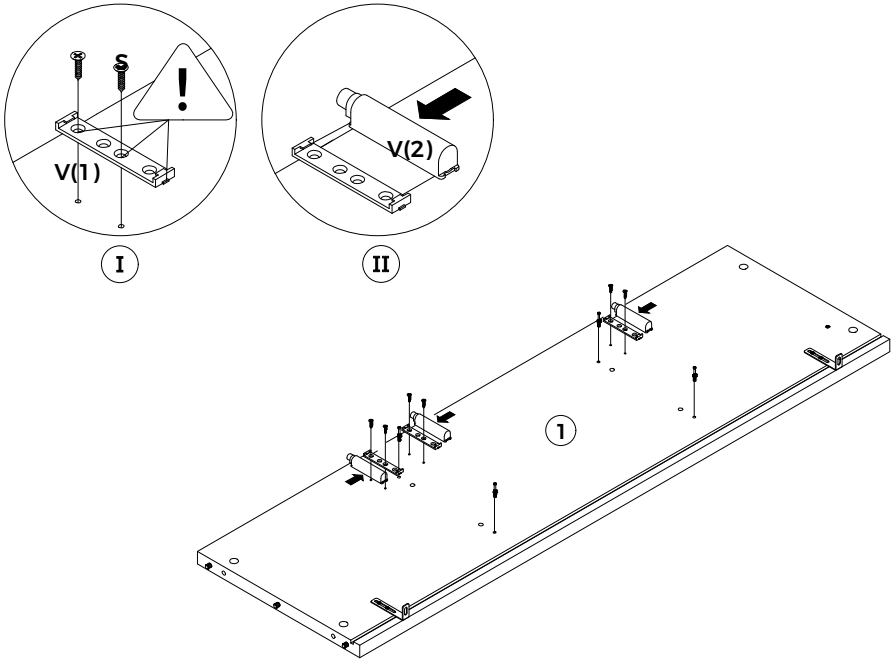

furniturebox

STEP 10

Screw 8 x cam bolts [A] into Corner rails [2] & [3] as shown.

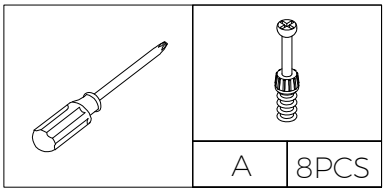

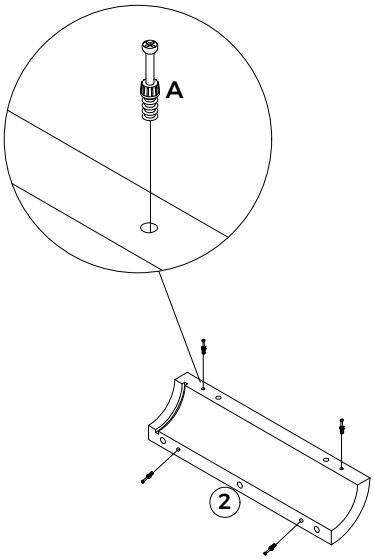

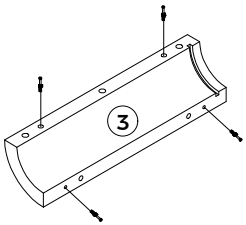

STEP 11

Attach Corner rails [2] & [3] onto Top panel [1] as shown.
Insert 4 x cam nuts [B] into Top panel [1] as shown, tight with a Phillips head screwdriver.

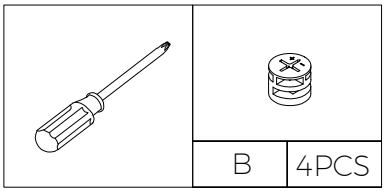

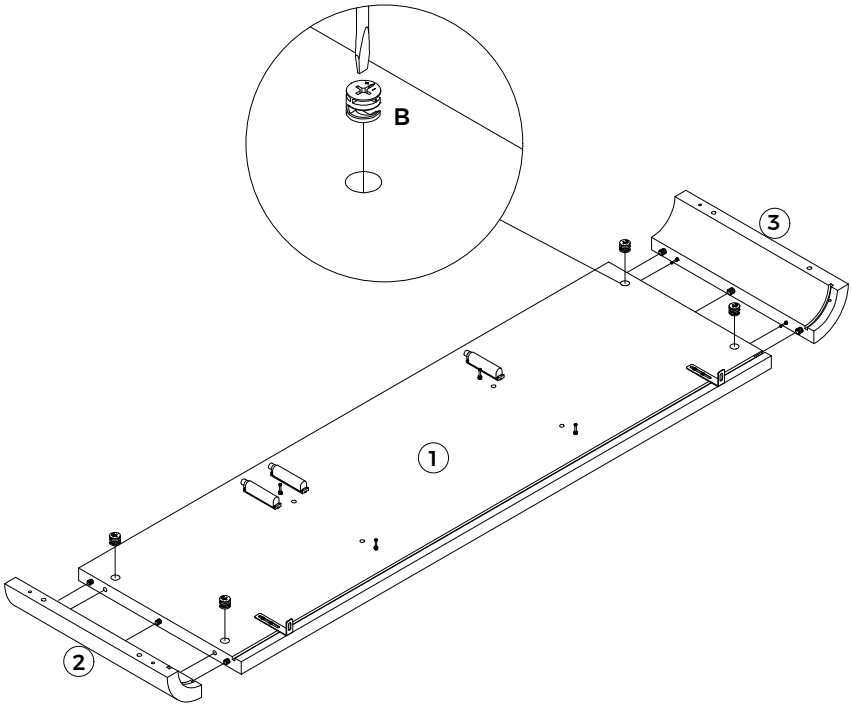

STEP 12

Attach 4 x metal plates [K] to top panel and corner rails with 8 x screws [L] as shown.

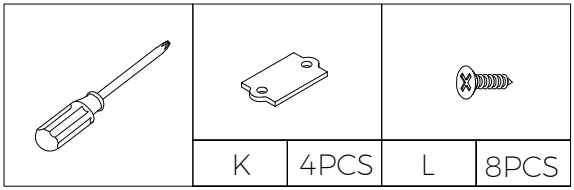

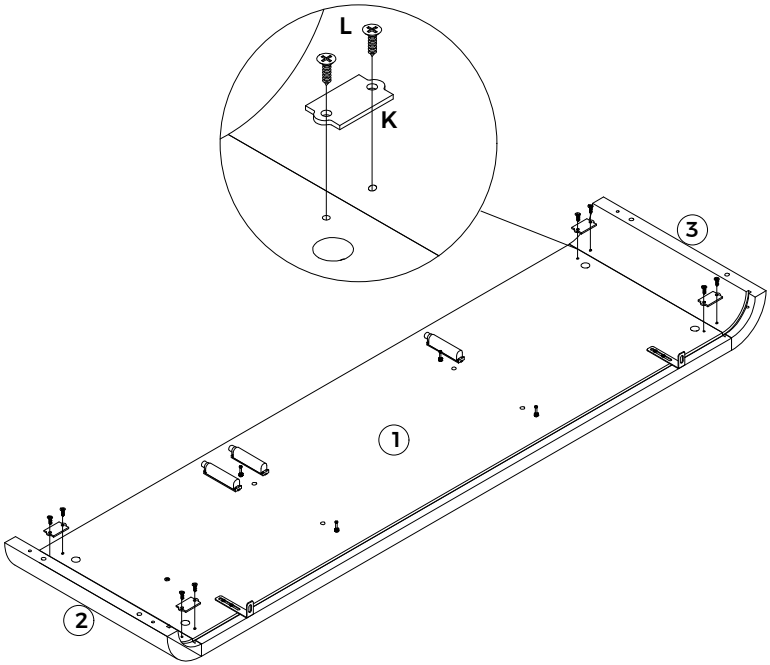

furniturebox

STEP 13

Attach Top panel [1] onto assembled frame as shown.
Insert 8 x cam nuts [B] into Divider panels [7] & [8] and
Side panels [5] & [6] as shown, tight with a flat head screwdriver.

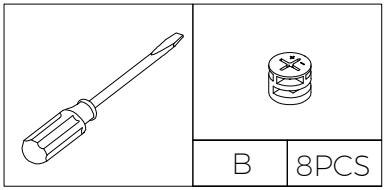

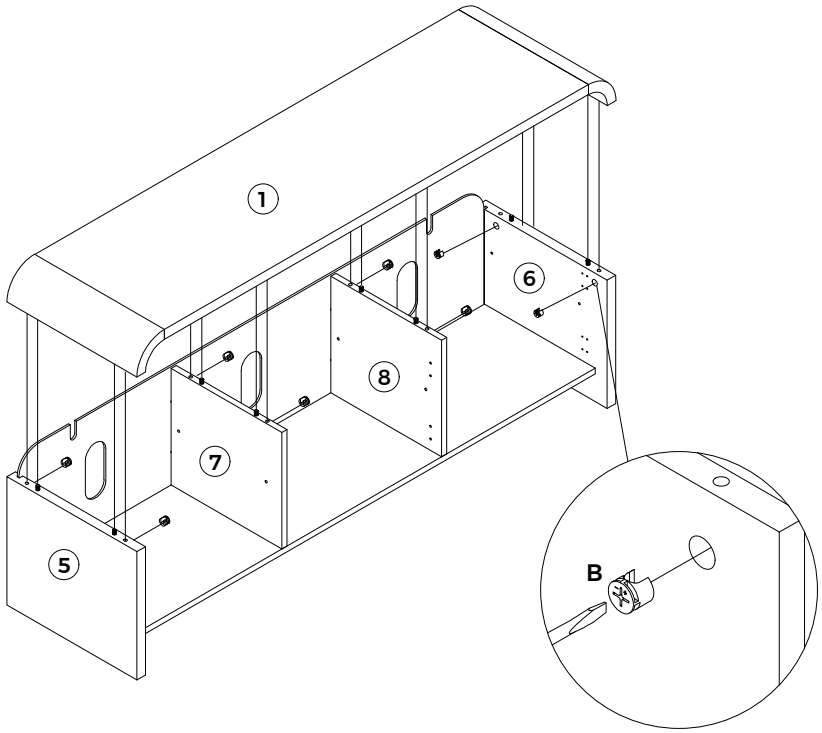

STEP 14

If necessary, gently adjust the Top panel [1] sideways in either direction until XX and YY are equal. Holding it in place, fix 6 x wedges [Q] to assembled unit with 6 x screws [R] as shown.
Screw 4 x screws [R] into Back panel [11] as shown, using a Phillips head screwdriver.

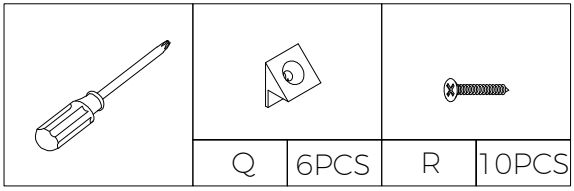

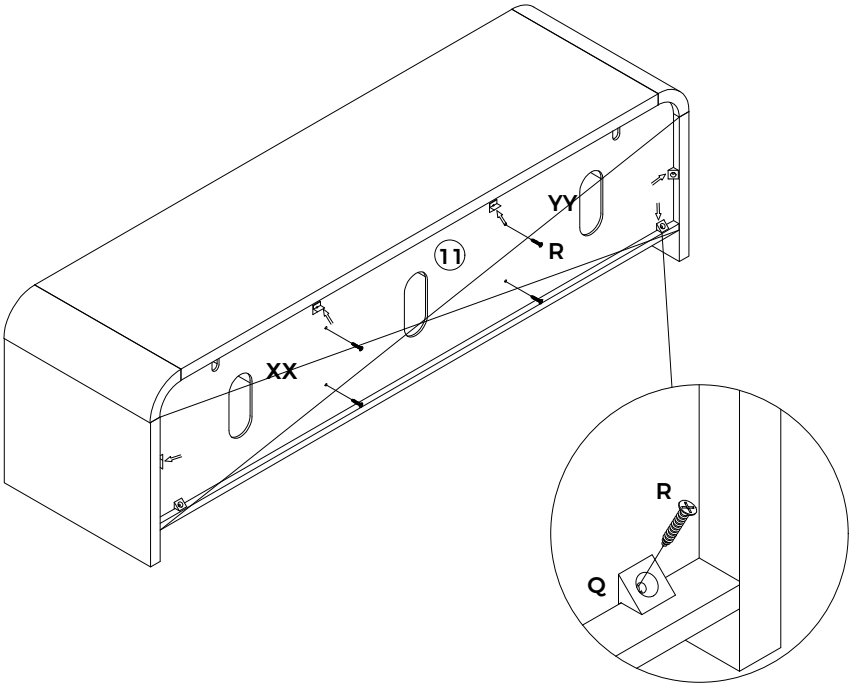

furniturebox

STEP 15

Insert 12 x shelf pins [Y] into desired holes in the panels.

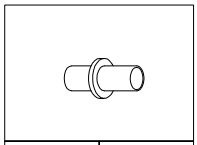

Y	12PCS

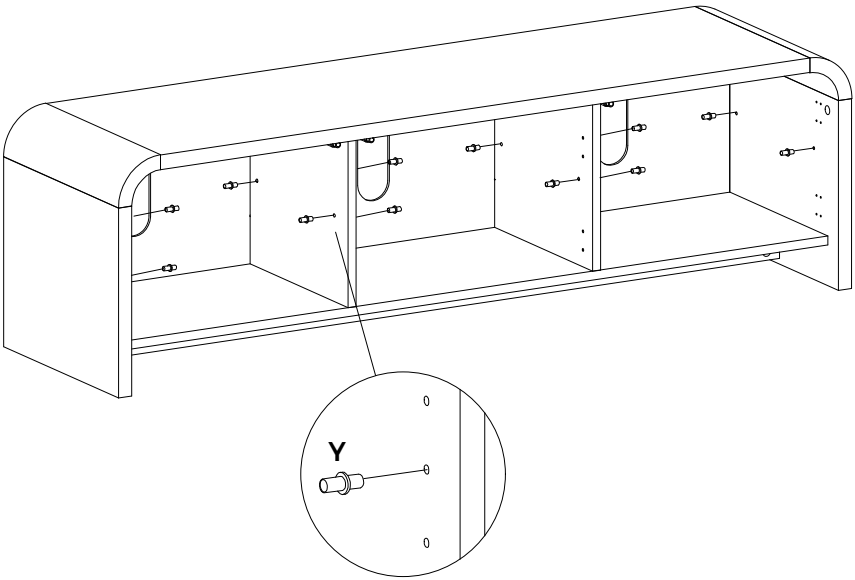

furniturebox

STEP 16

Attach 4 x Hinges [T] to Doors [12] & [13] with 8 x screws [U] as shown, tighten with a Phillips head screwdriver.

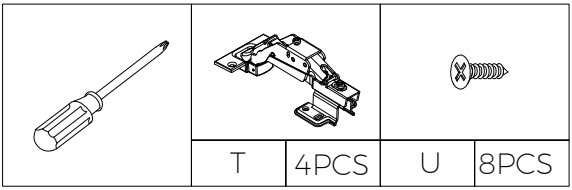

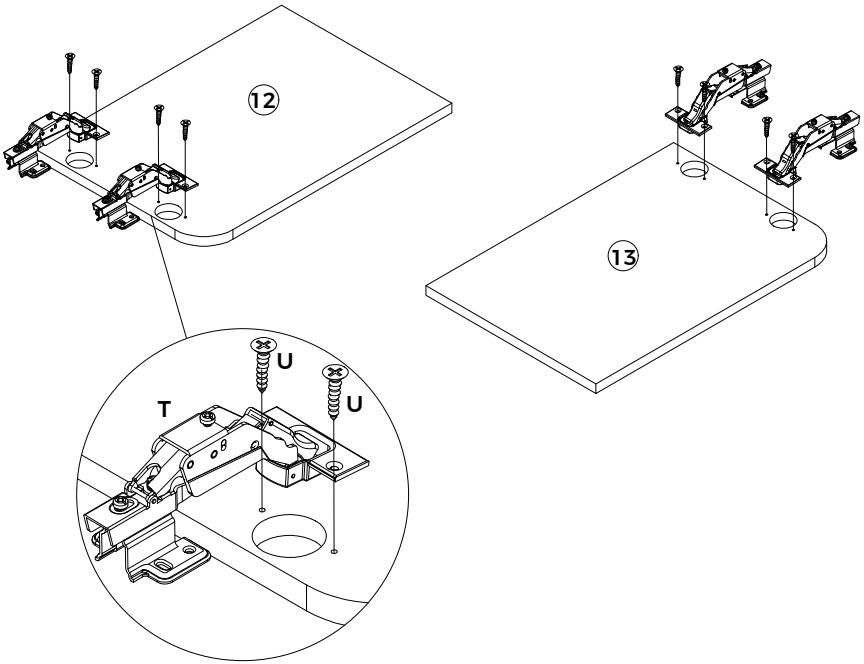

STEP 17

Attach 2 x Hinges [S] to Door [14] with 4 x screws [U] as shown, tighten with a Phillips head screwdriver.

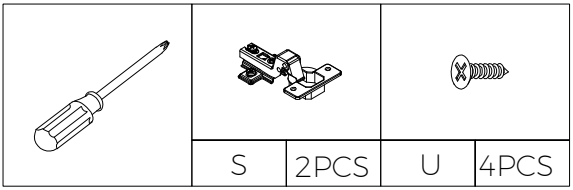

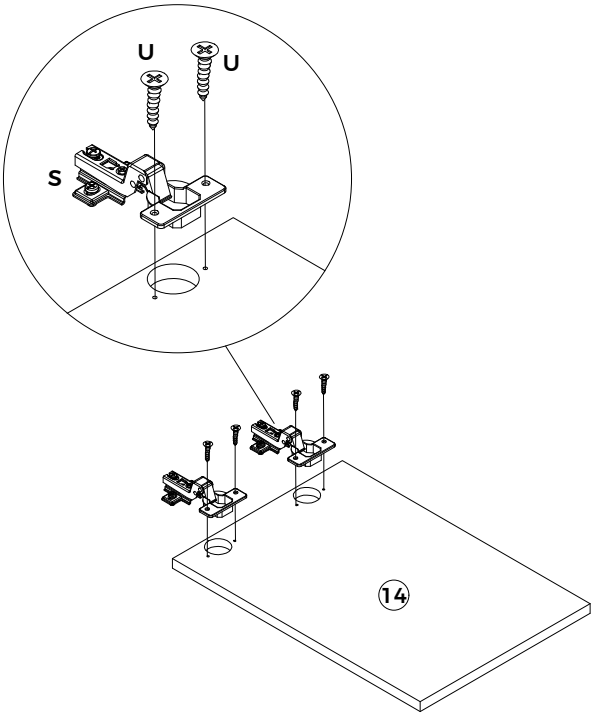

furniturebox

STEP 18

With assistance, turn over the frame onto its back.
Attach Side doors [12] & [13] to assembled unit as shown,
secure the large hinges using 8 x screws [U] with a Phillips head screwdriver.

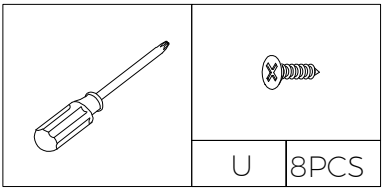

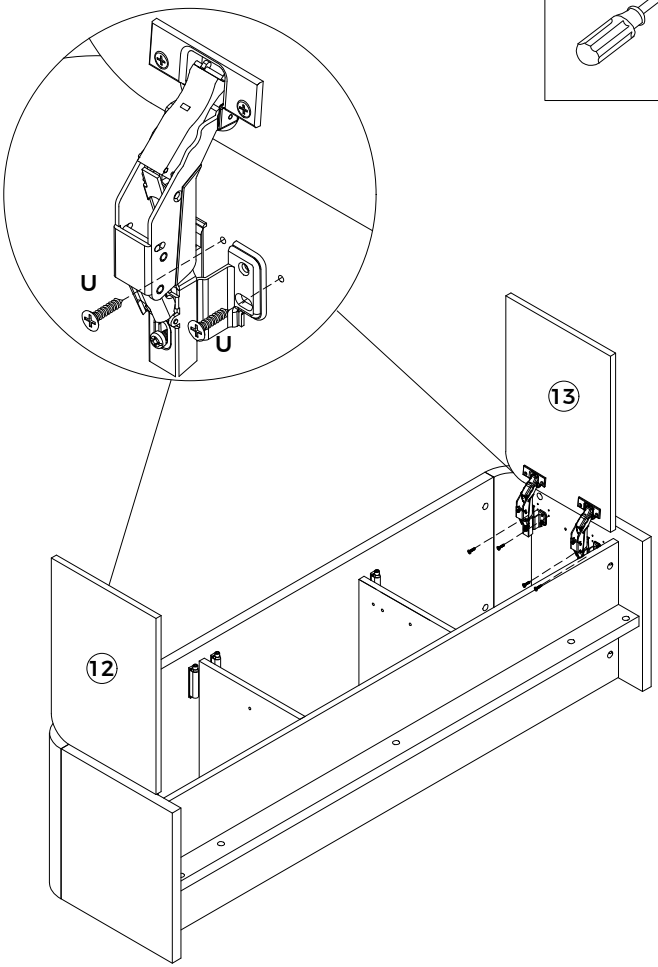

furniturebox

STEP 19

Attach Middle door [14] to assembled unit as shown, tighten with a Phillips head screwdriver.

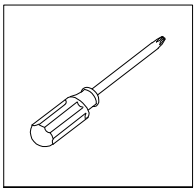

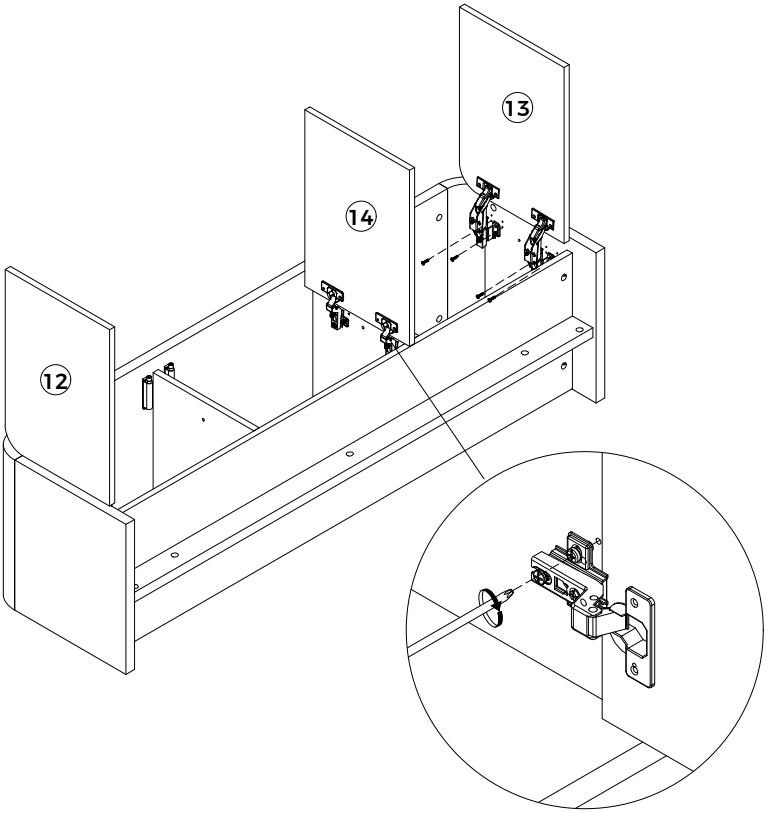

furniturebox

STEP 20

With assistance, turn the unit upright.

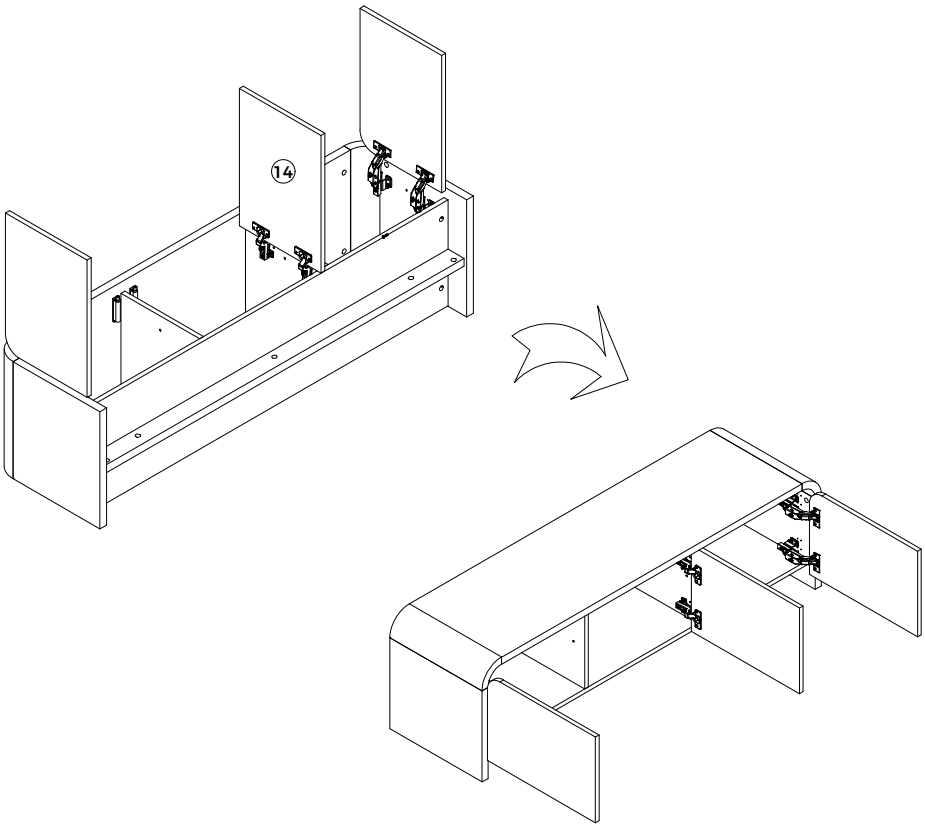

furniturebox

STEP 21 - Anti-tip Restraint

WARNING

To reduce the risk of serious injury or death from tip-over, this unit must be securely anchored to a suitable wall before use.

- Never allow children to climb, stand or hang on this furniture.
- Always secure the unit to a suitable wall using appropriate fixings for your wall type.
- Before drilling, check for hidden electrical cables, water pipes and other concealed services.
- If you are unsure how to install the anti-tip restraint or select suitable fixings, seek advice from a qualified installer or your local hardware store.

Installation

1. With assistance, move the TV unit into its final position.
2. Using the attached L-brackets [N] as a guide, mark the fixing positions on the wall.
3. Move the cabinet away from the wall and prepare the wall for fixing as required.
4. Reposition the cabinet and securely fasten the L-brackets [N] to the wall using fixings suitable for your wall type.
5. Check that the cabinet is level, stable and securely anchored before use.

Important Handling Note

Always lift the cabinet from the base. Do not lift or carry the cabinet by the top panel, as this may cause damage or separation.

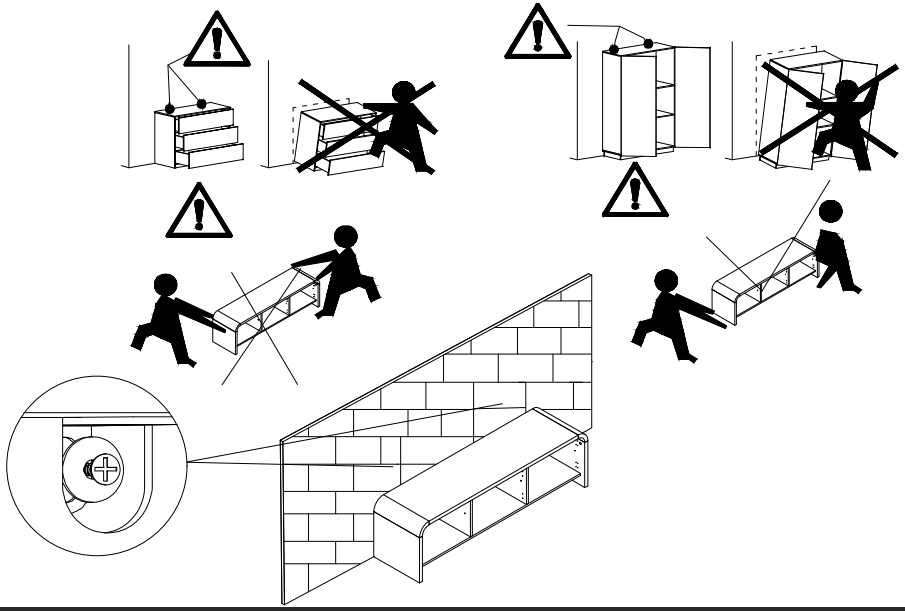

furniturebox

STEP 22

Doors adjustment :

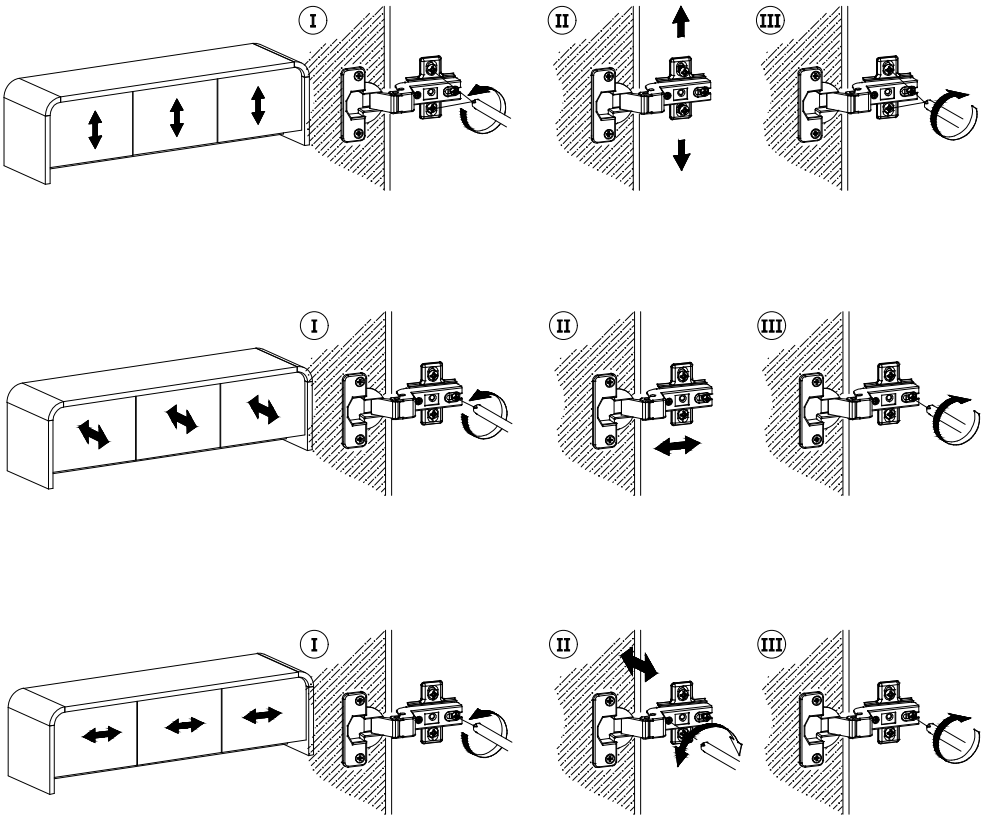

furniturebox

STEP 23

After door adjustment, using 8 x screws [U] to strengthen fixing of large hinges as shown.

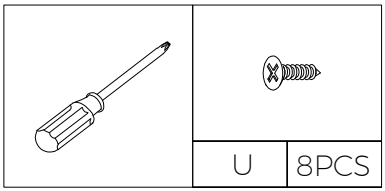

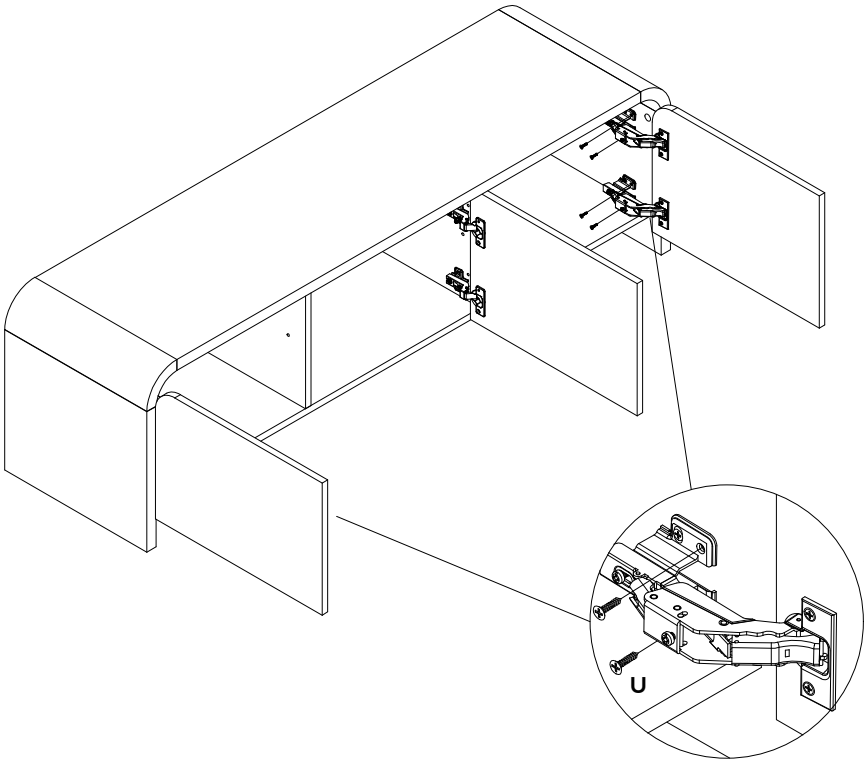

furniturebox

STEP 24

Place 2 x Side shelves [9] and Middle shelf [10] into cabinet as shown by resting on the shelf pins.

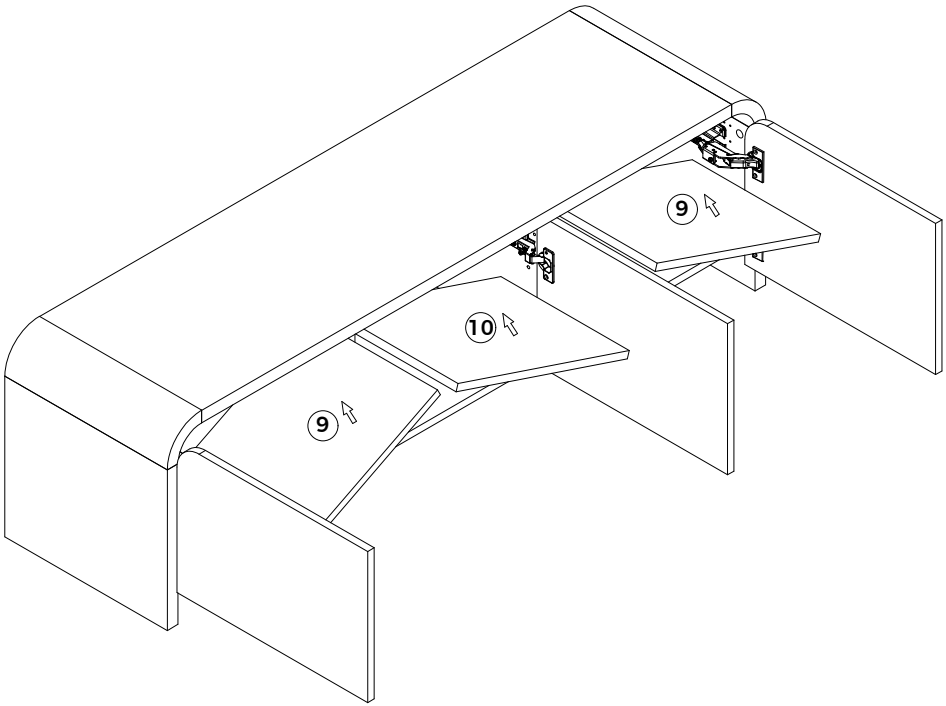

furniturebox

STEP 25

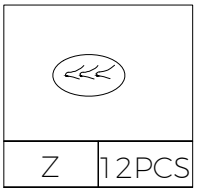

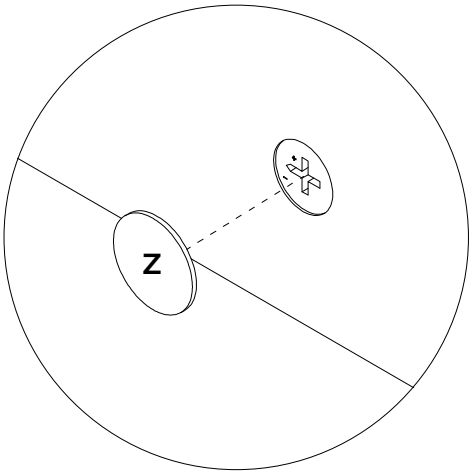

Add the screw caps for those visible cams

furniturebox

STEP 26

After transportation the push-to-open latches may require adjustment if they are not working. See diagrams below. To adjust the latches, please push and release the piston once to allow it to extend outwards. Once extended, gently turn the piston clockwise or anti-clockwise to correct its position. Close and open the door to confirm latch is functioning correctly.

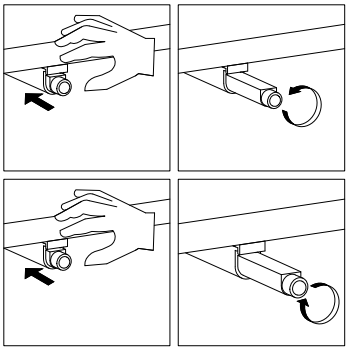

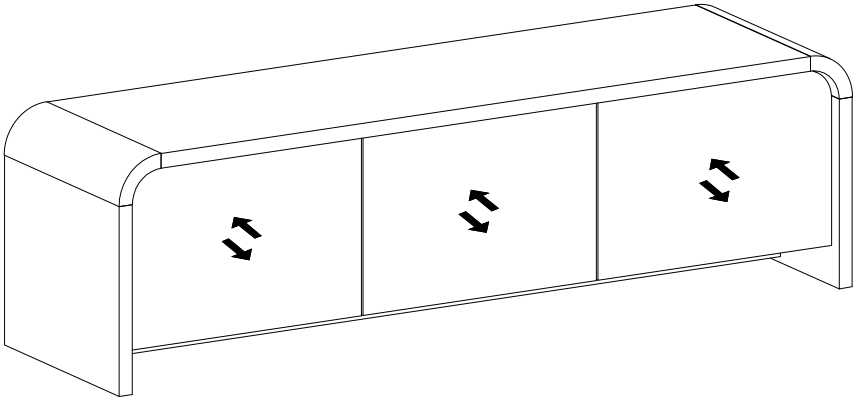

furniturebox

STEP 27

Note: To open the door, push the corner of the door front inward as shown.

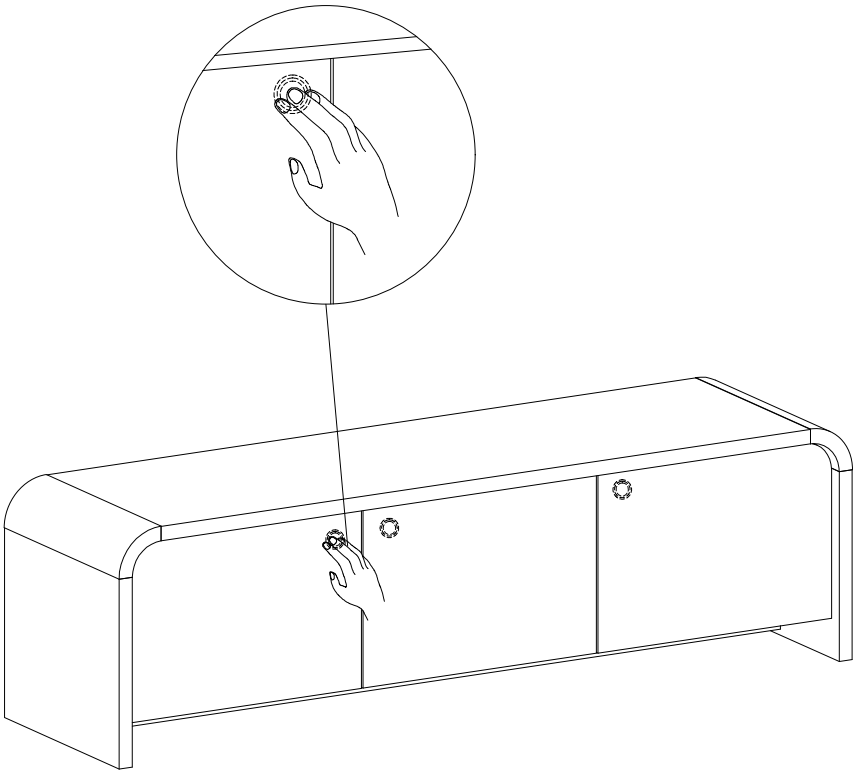

Looking Good!

Now you've assembled your furniture, find out how to care for your item and keep it looking brand new.

Product Care Guide



Look for your care guide in the box or visit:
www.furniturebox.co.uk/club/care-guide

our 2 year GUARANTEE

Our products come with a 2 year guarantee, giving you extra peace of mind when shopping with us!

What the guarantee covers

PRE-INSERTED FIXINGS
e.g. loose metal threads

FAULTY JOINTS
e.g. legs bending

EXTERNAL FIXING FAULTS
e.g. metal discs removing from table top

STRUCTURAL INTEGRITY
e.g. the frame of the product

Activate your Guarantee

Scan the QR code to read the full guarantee online and register your product. It only takes a moment to fill out.
Or visit: furniturebox.co.uk/our-guarantee

Furniturebox Unit 6, Indurent Park Chippenham, Clanville Way, Chippenham, SN15 5BD, UK
Telephone: 01747 863 333 **Email:** sales@furniturebox.co.uk