ASSEMBLY INSTRUCTION

	A	1
	B	8
	C	8
	D	16
	E	4
	F	8
	G	1

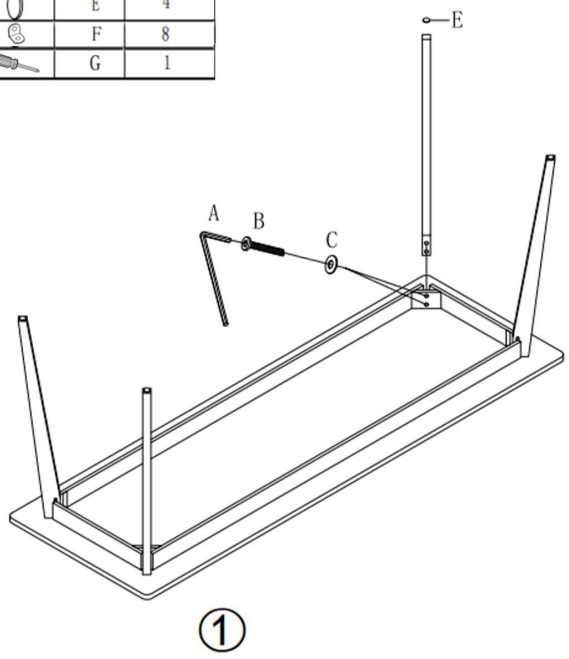

①

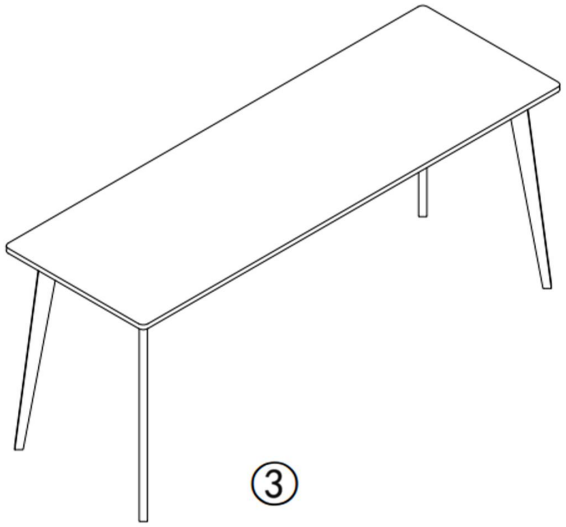

③

If you want to make your table more stable, please continue with the installation steps below.

	A	1
	B	8
	C	8
	D	16
	E	4
	F	8
	G	1

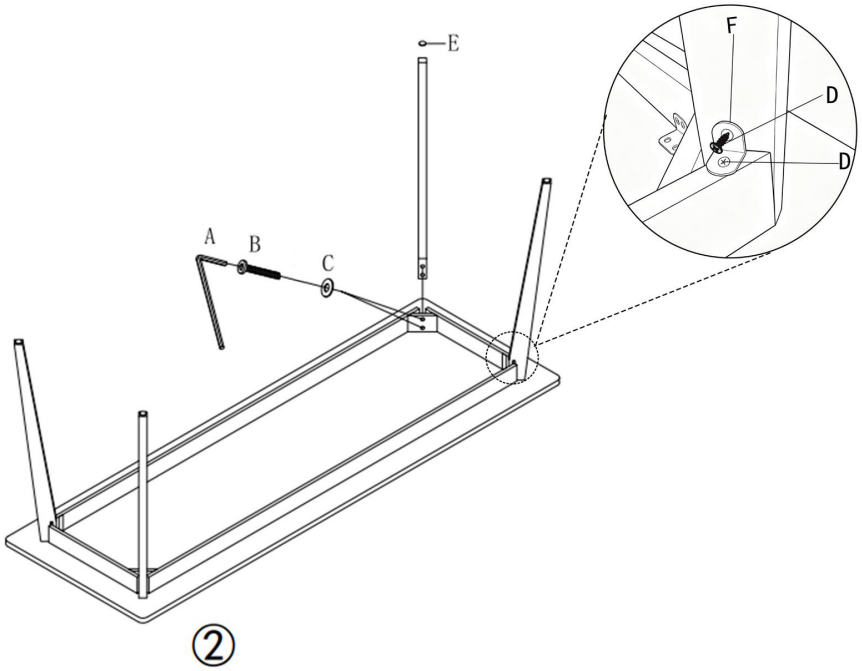

②