Outdoor Adirondack Chair

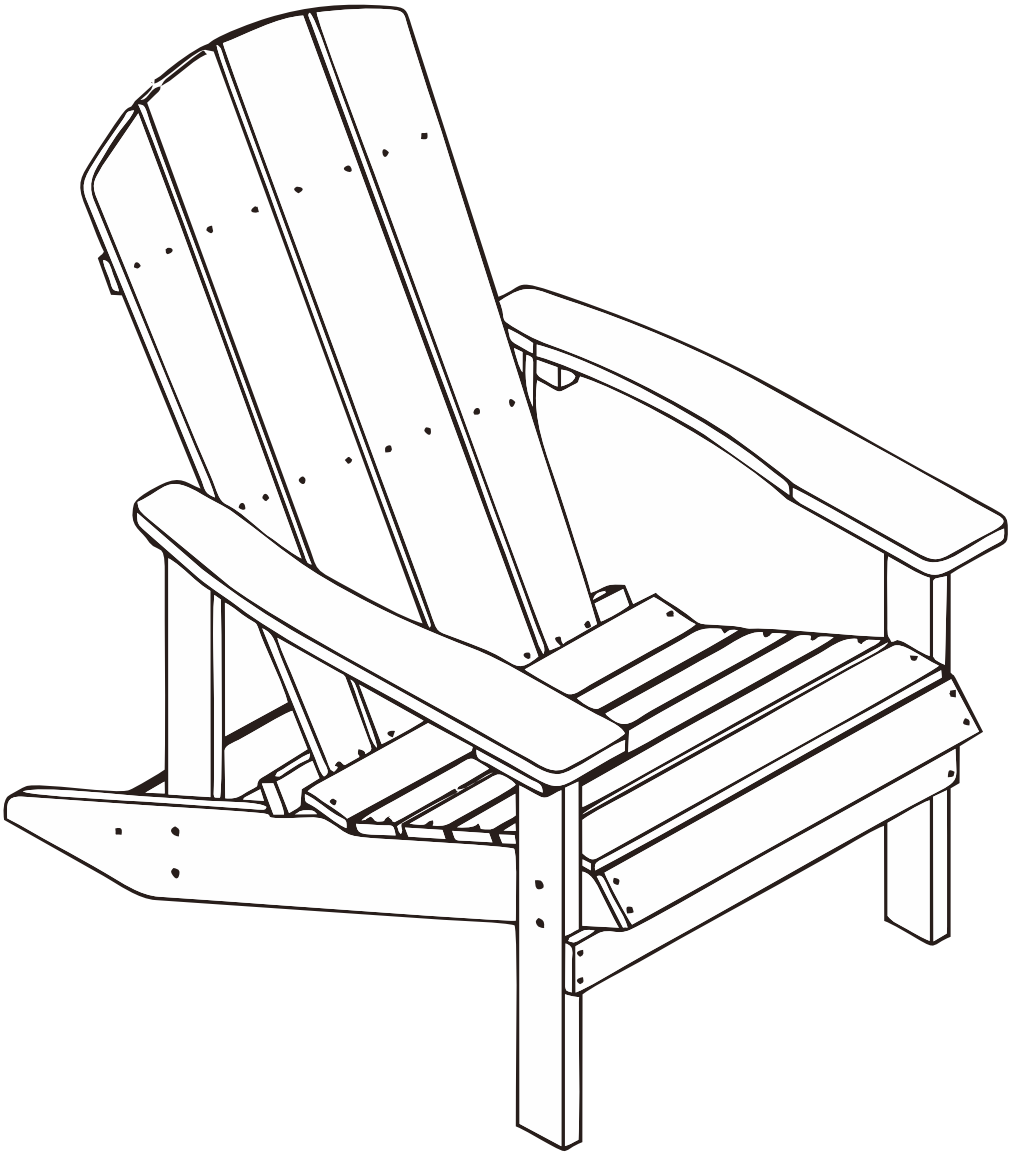

If need any other assistance, Please feel free to contact us. we are always here at your service:)

User Manual

General Guidelines

- Please read the following instructions carefully and use the product accordingly.
- Please keep this manual and hand it over when you transfer the product.
- This summary may not include every detail of all variations and considered steps. Please contact us when further information and help are needed.

Notes

- Personal injury and/or damage to the product may occur if products are used outside of their intended purposes and/or if products have been changed/modified from their original design. The product must be assembled and used in accordance with the provisions of the manual. The seller does not assume any responsibility or liability with respect to any damage caused by incorrect assembly or improper use.
- Carefully check accessories when opening the package. If anything is missing or damaged, please contact us immediately.
- Do not use sharp tools or equipment such as a knife or scissors when removing the protective material, as it may damage the product.
- Carefully remove all of the components from the packaging and set aside for assembly.
- Assemble on a soft surface to prevent scratching during assembly.
- Tighten all components securely before use. Failure to do so may result in personal injury.

Warnings

- Keep children away when assembling the product. Small parts are included in the package; they may be fatal if swallowed or inhaled.
- To avoid the potential dangers of suffocation, please keep all parts and packaging (film, plastic bags, foam, etc.) away from babies and children.
- Keep the parasol away from fire; do not use it during extreme cold and heat, and severe weather like rainy, windy, snowy days, and hailstorms, etc.

Daily Maintenance

- Clean the chair with a soft cloth moistened with a neutral detergent. Store it after completely drying.

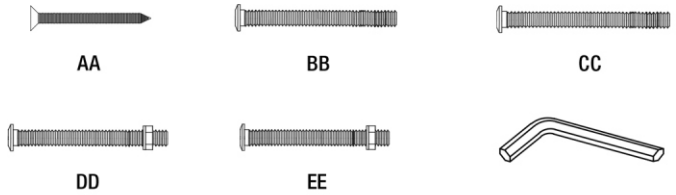

Part	Description	Quantity
AA	Screw (3.5x40)	6
BB	Bolt (M6x60)	2
CC	Bolt (M6x70)	2
DD	Bolt (M6x60)	6
EE	Bolt (M6x45)	4

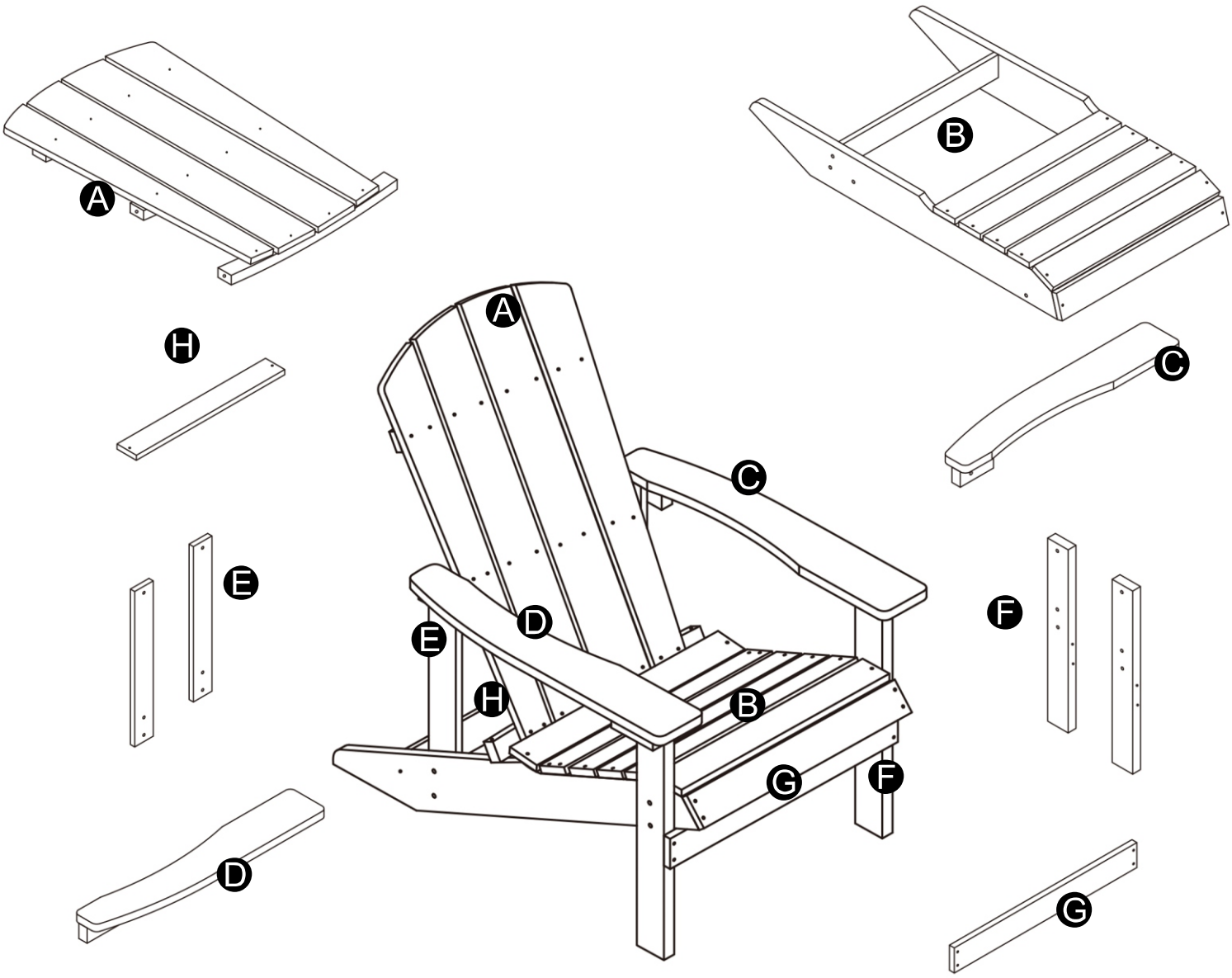

Part	Description	Quantity
A	Back	1
B	Seat	1
C	Left armrest	1
D	Right armrest	1
E	Vertical Back Support	2

Part	Description	Quantity
F	Front Legs	2
G	Front Leg Cross Beam	1
H	Rear Seat Slat	1

***Note: DO NOT TIGHTEN ANY BOLTS BEFORE THE UNIT PUT TOGETHER.**

Step 1 Attaching the rear seat slat

- Attach the rear seat slat (H) to the seat (B) with screws (AA).

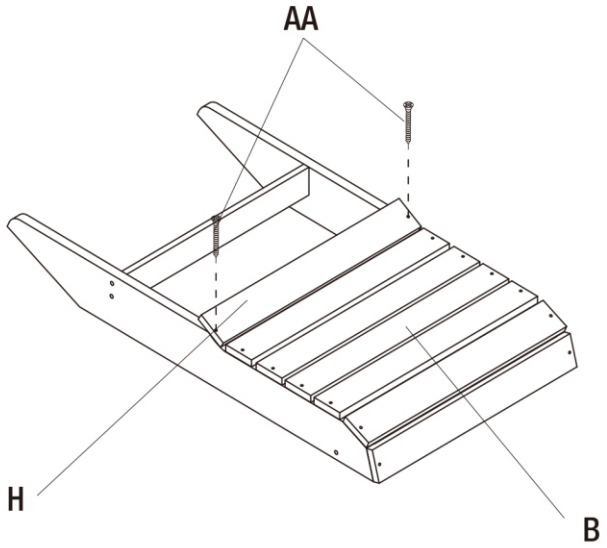

Step 2 Attaching the front legs

- Attach the front legs (F) onto the seat (B) with Bolts (DD).
  Attach Vertical Back Support (E) onto the Seat with Bolts (EE).

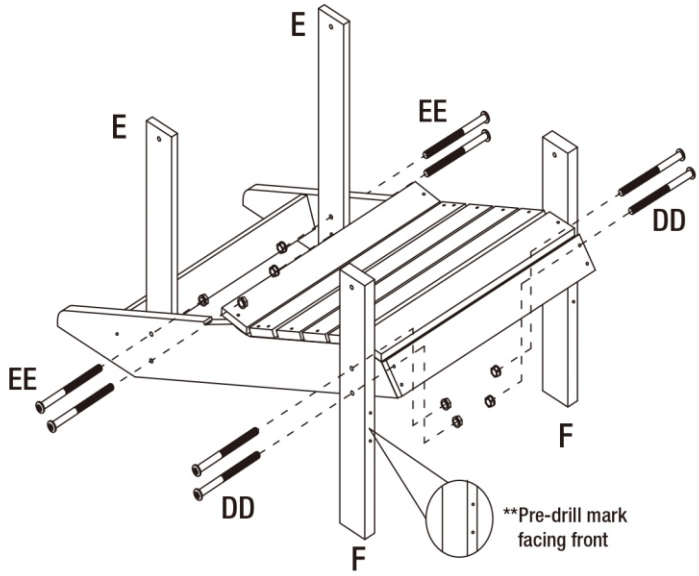

Step 3 Attaching the cross board

- Attach the Cross Beam (G) to the front legs (F) with screws (AA).

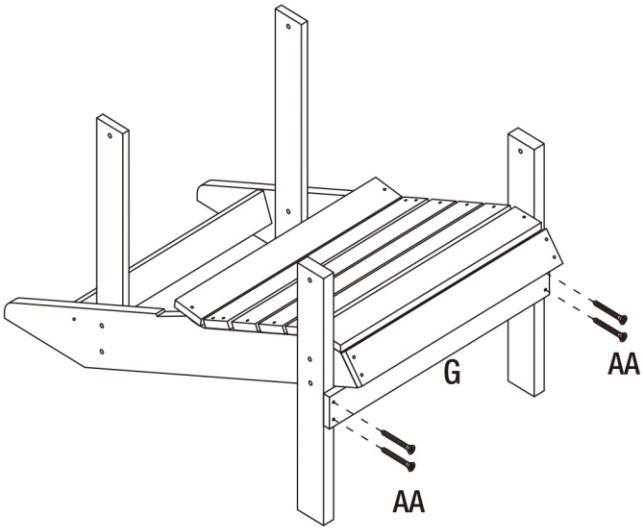

Step 4 Attaching the Hinge

- Attach the Back (A) to the Seat (B) with Bolts (BB).
  Attach the Armrest (C & D) to the Front Legs with Bolt (DD).
  Attach th Armrest to the Vertical Back Support (E) with Bolt (CC).

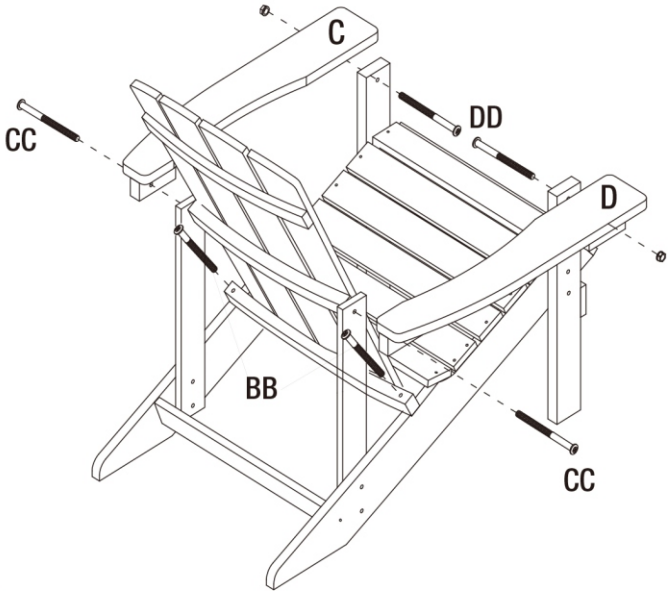

E