ASSEMBLY INSTRUCTION

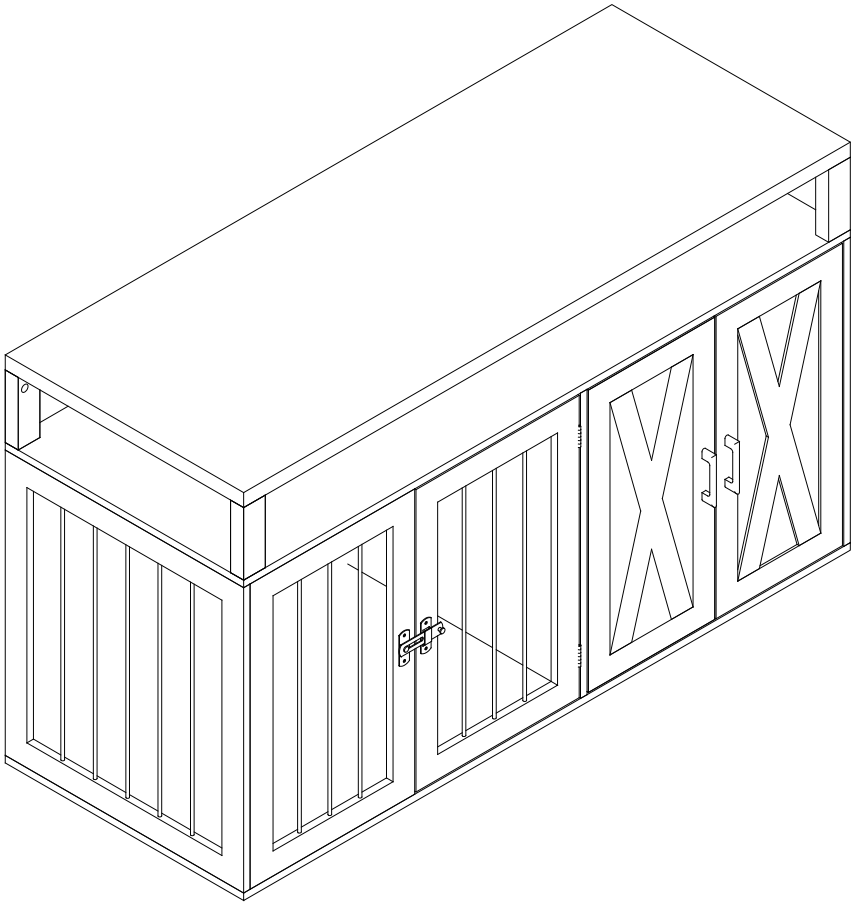

Parts and Operation Elements

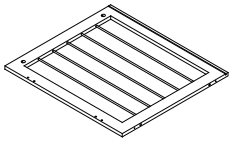 Left Panel	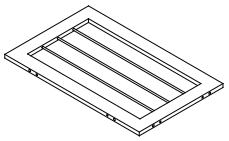 Door	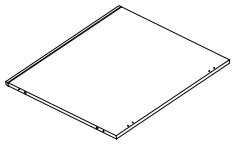 Middle Panel	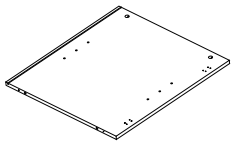 Right Panel
① 1 pc	② 1 pc	③ 1 pc	④ 1 pc
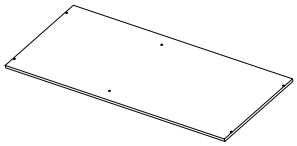 Bottom Panel	 Board	 Board	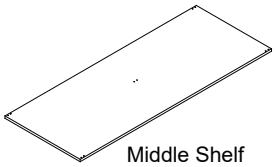 Middle Shelf
⑤ 1 pc	⑥ 3 pcs	⑦ 2 pcs	⑧ 1 pc
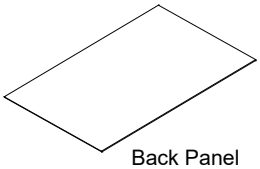 Back Panel	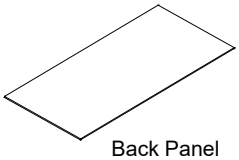 Back Panel	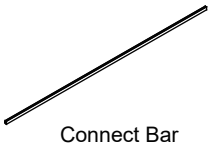 Connect Bar	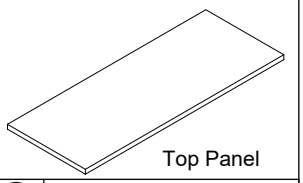 Top Panel
⑨ 2 pcs	⑩ 2 pcs	⑪ 2 pcs	⑫ 1 pc
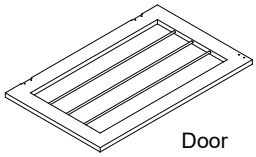 Door	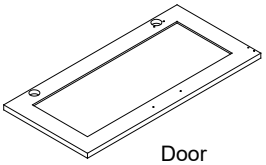 Door	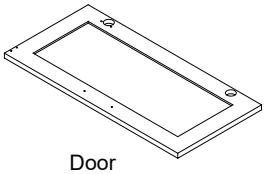 Door	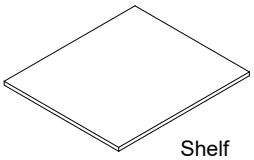 Shelf
⑬ 1 pc	⑭ 1 pc	⑮ 1 pc	⑯ 1 pc

	 15*10mm	 Wood Dowel 6*30mm	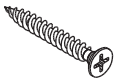 Screw 4*40mm	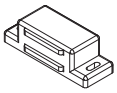 magnet	 3*12mm Screw
A 15 pcs	B 15 pcs	C 23 pcs	D 18 pcs	E 2 pcs	F 14 pcs
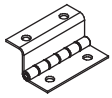 Hinge	 Iron sheet	 Hinge	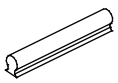 Handle	 Screw	 Pin
G 2 pcs	H 3 pcs	I 4 pcs	J 2 pcs	K 4 pcs	L 4 pcs
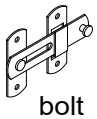 bolt	 3.5*14mm Screw	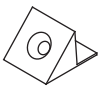 Plastic Block			
M 1 pc	N 48 pcs	O 16 pcs			

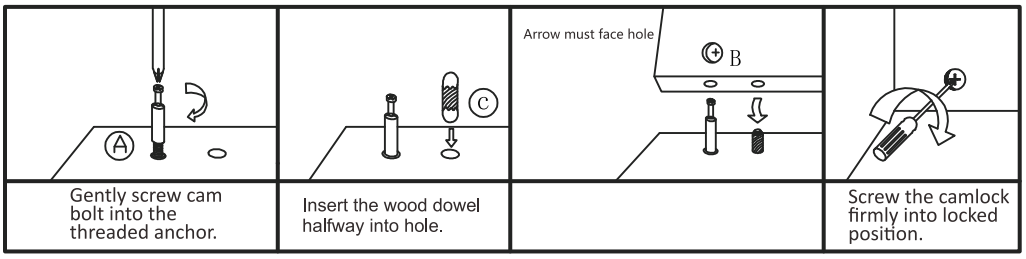

1

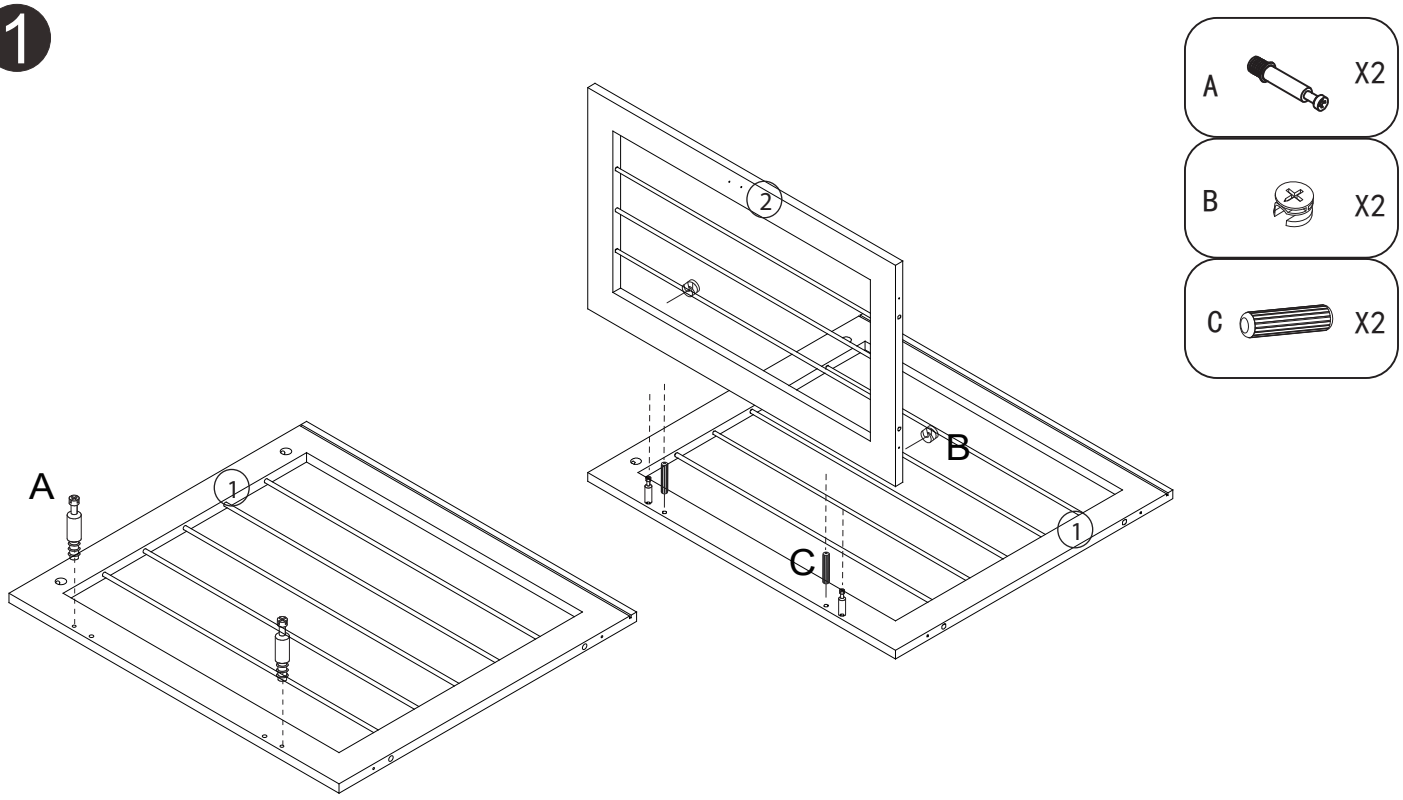

2

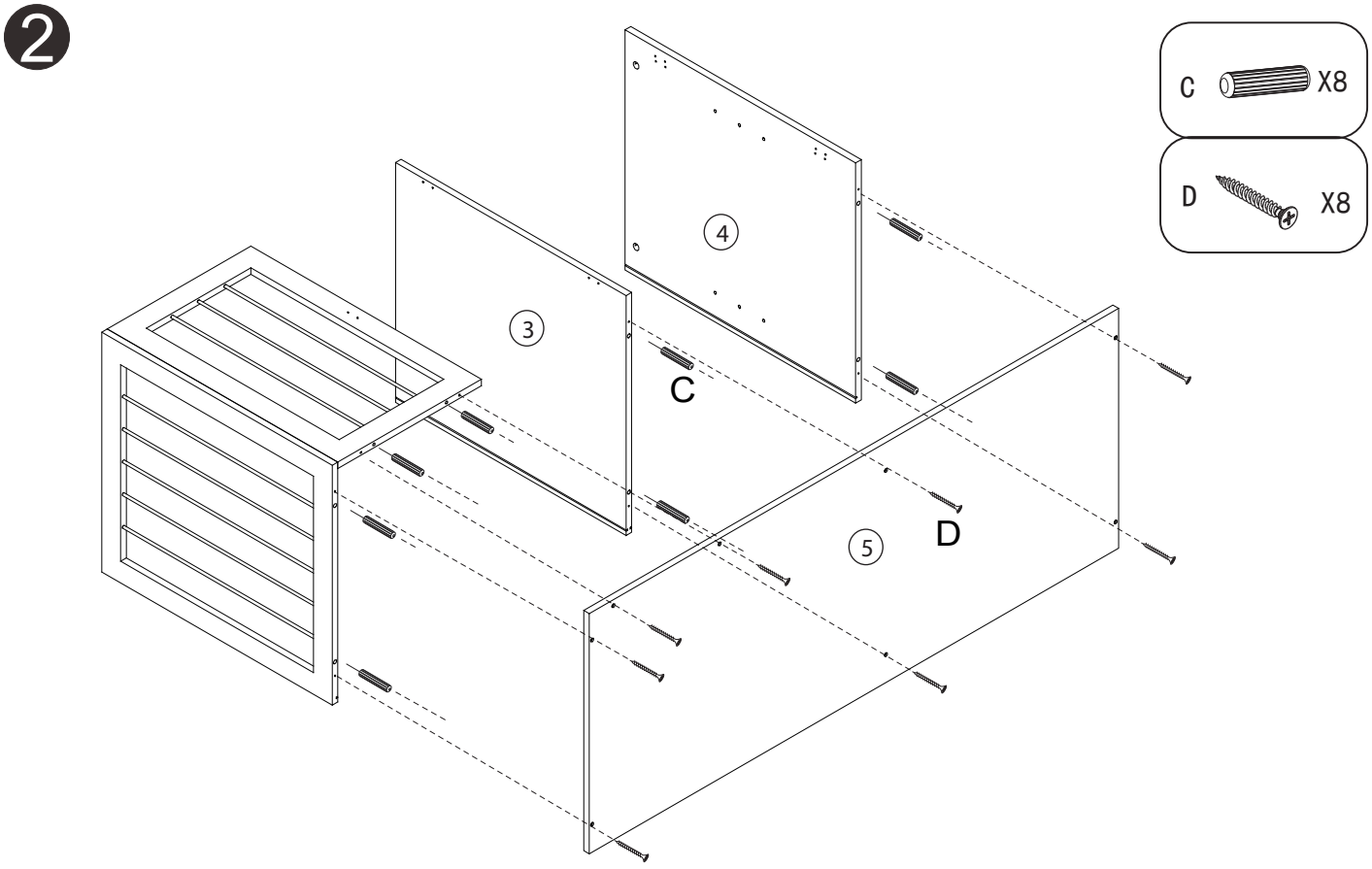

3

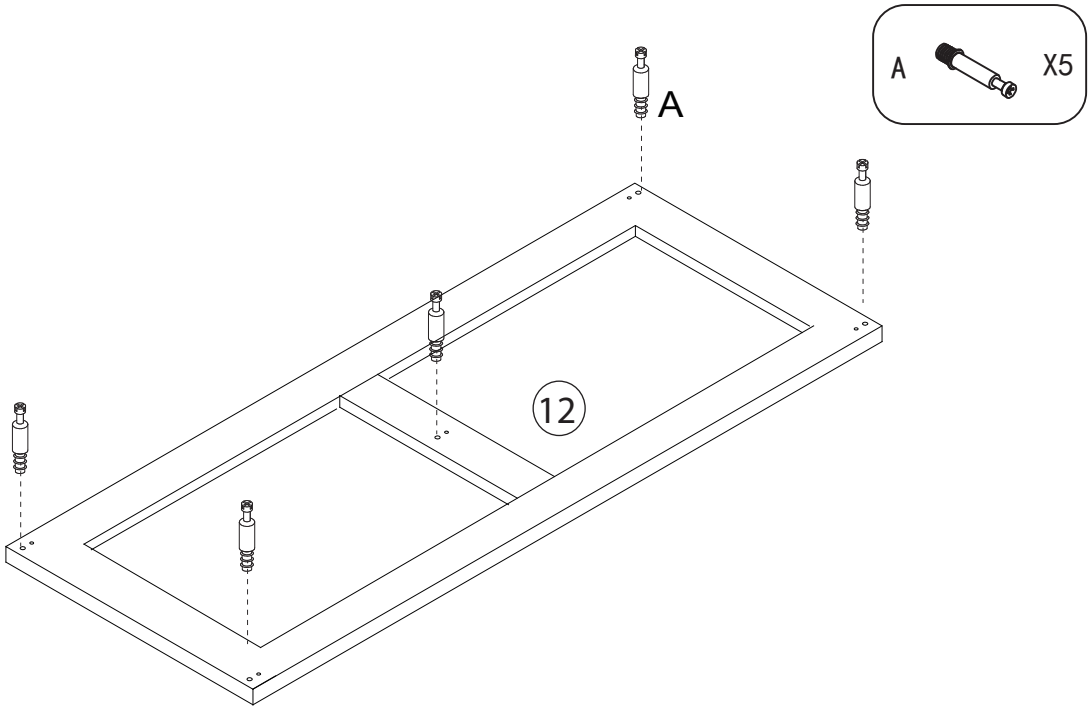

4

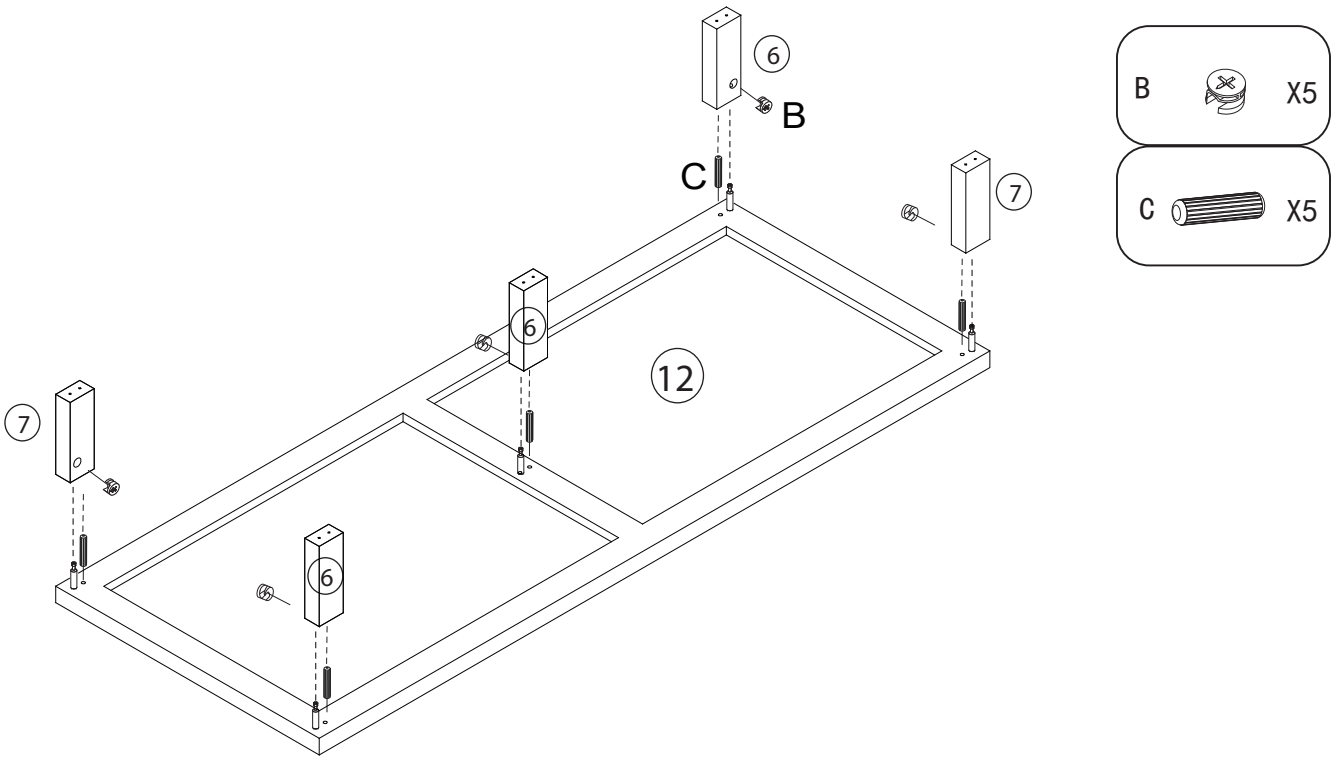

5

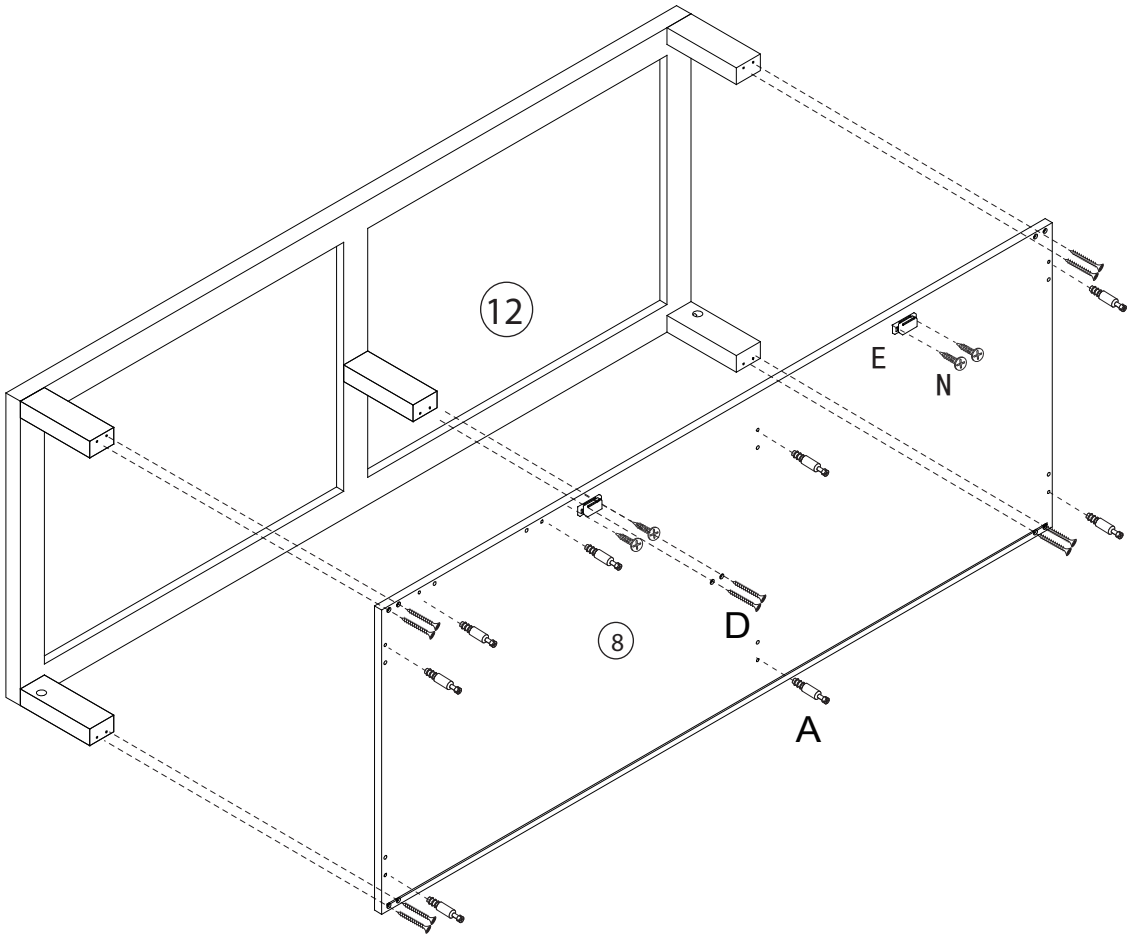

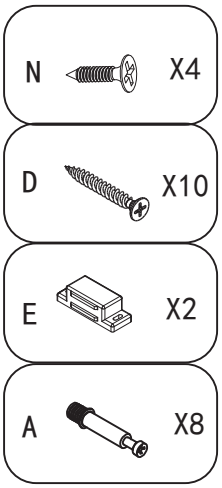

6

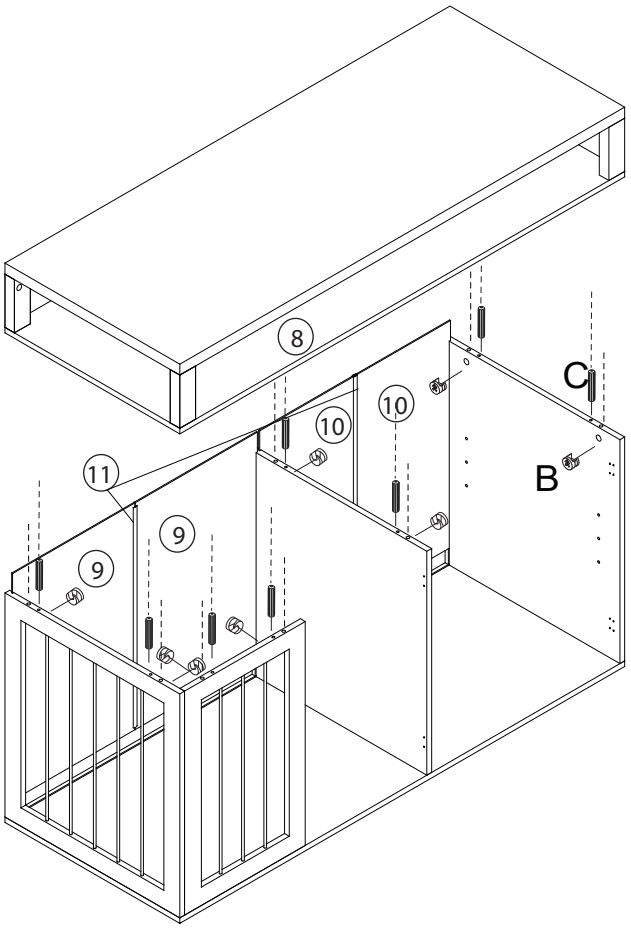

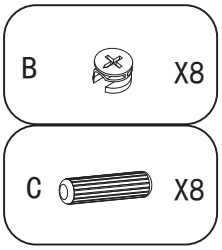

7

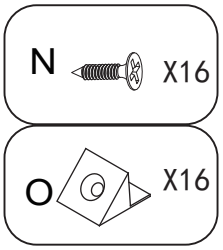

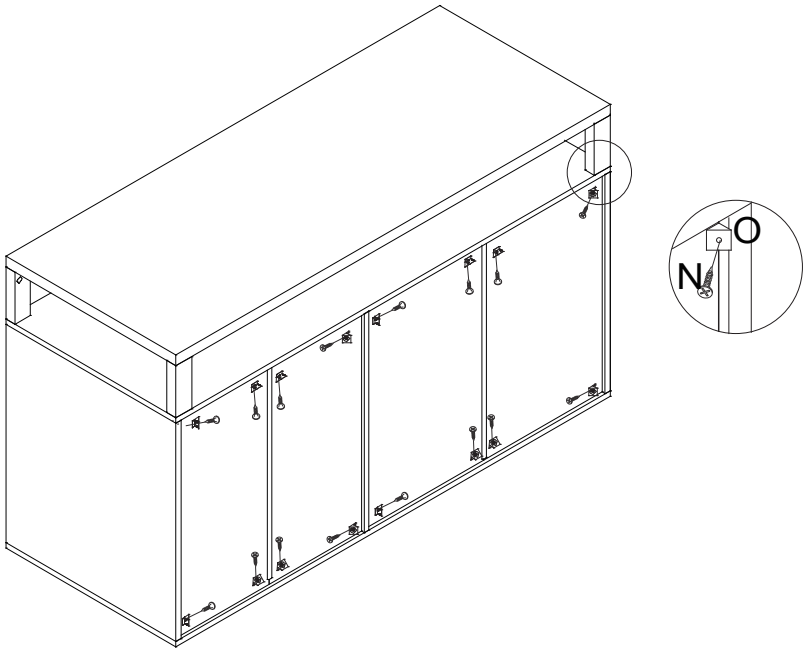

8

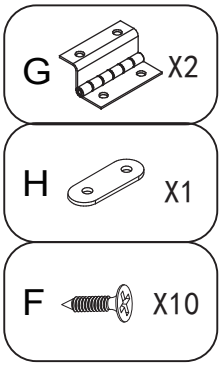

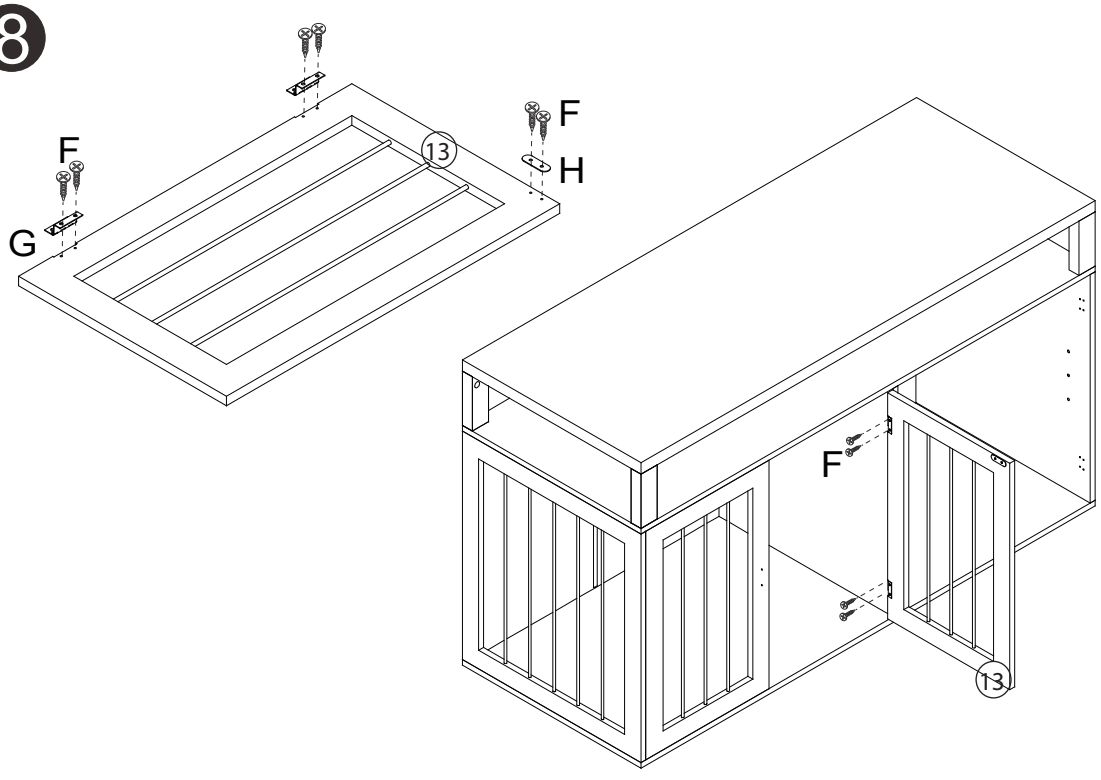

9

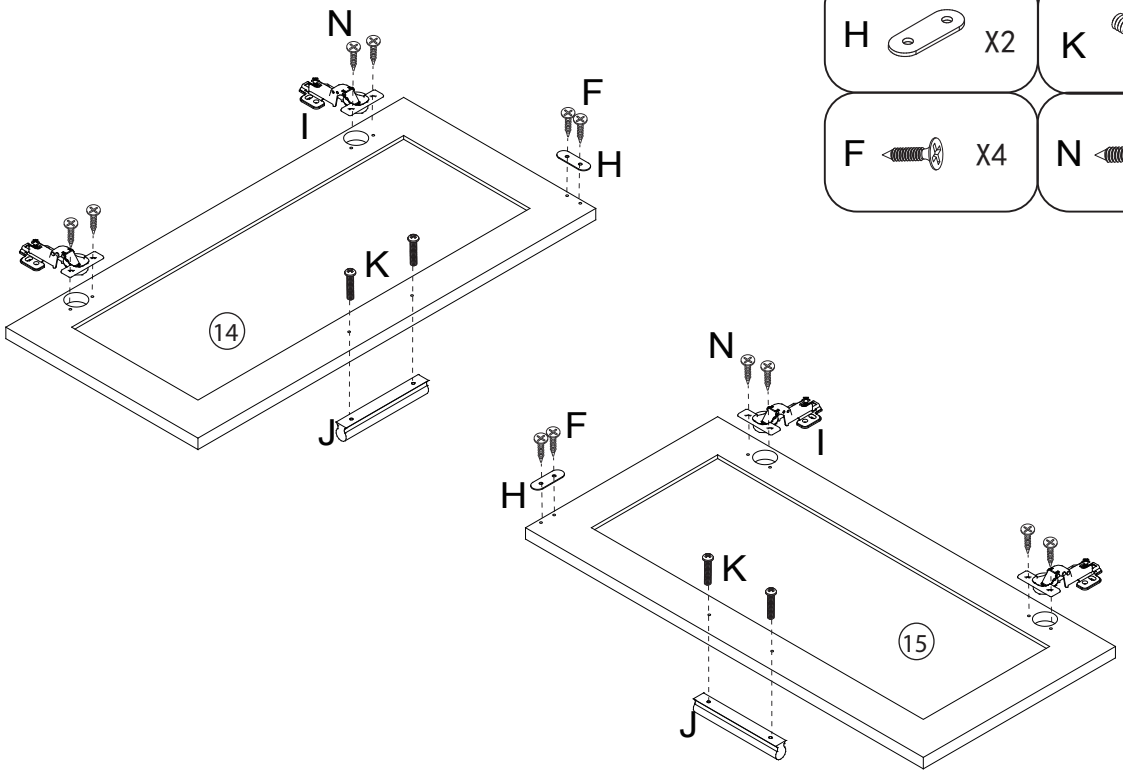

10

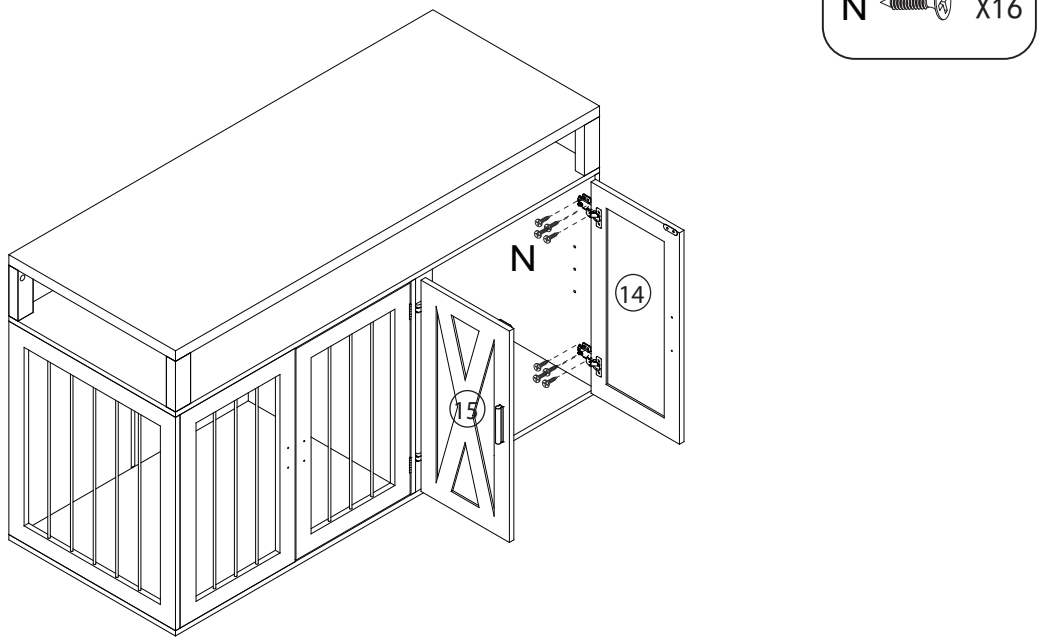

11

L X4

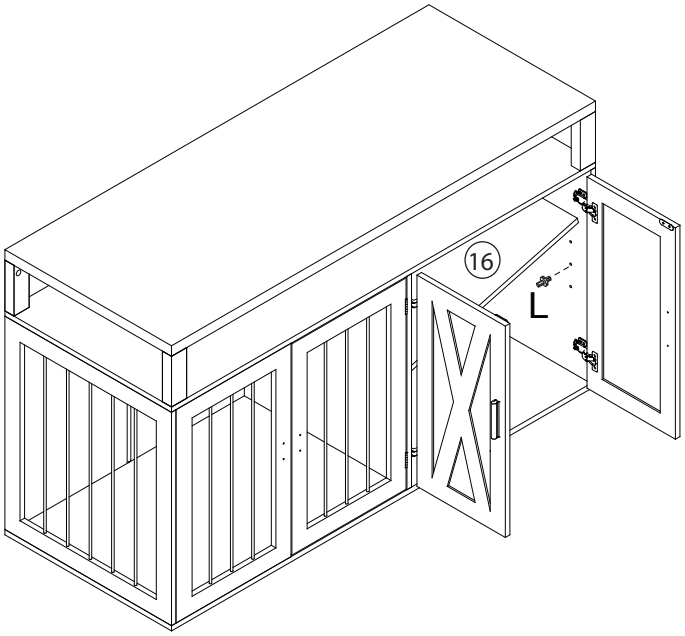

12

M X1

N X4

