# DIMENSIONS

Streamline

## Rough-In Dimensions

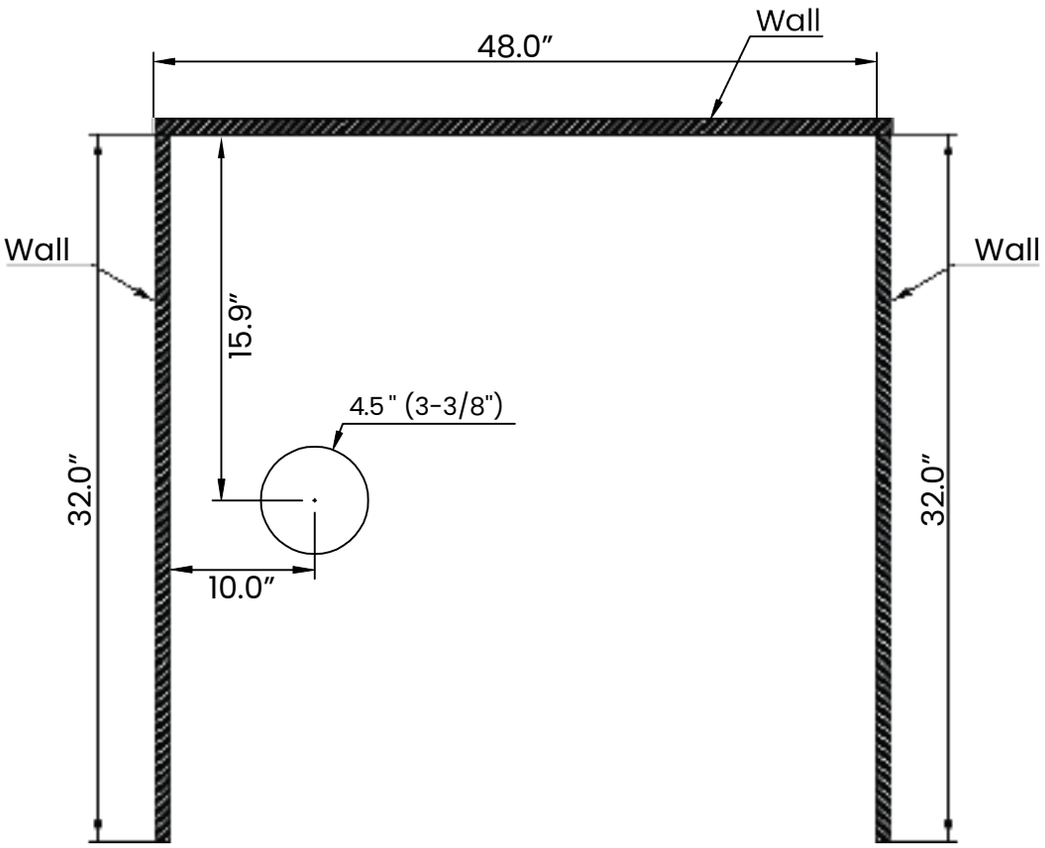


## Product Dimensions

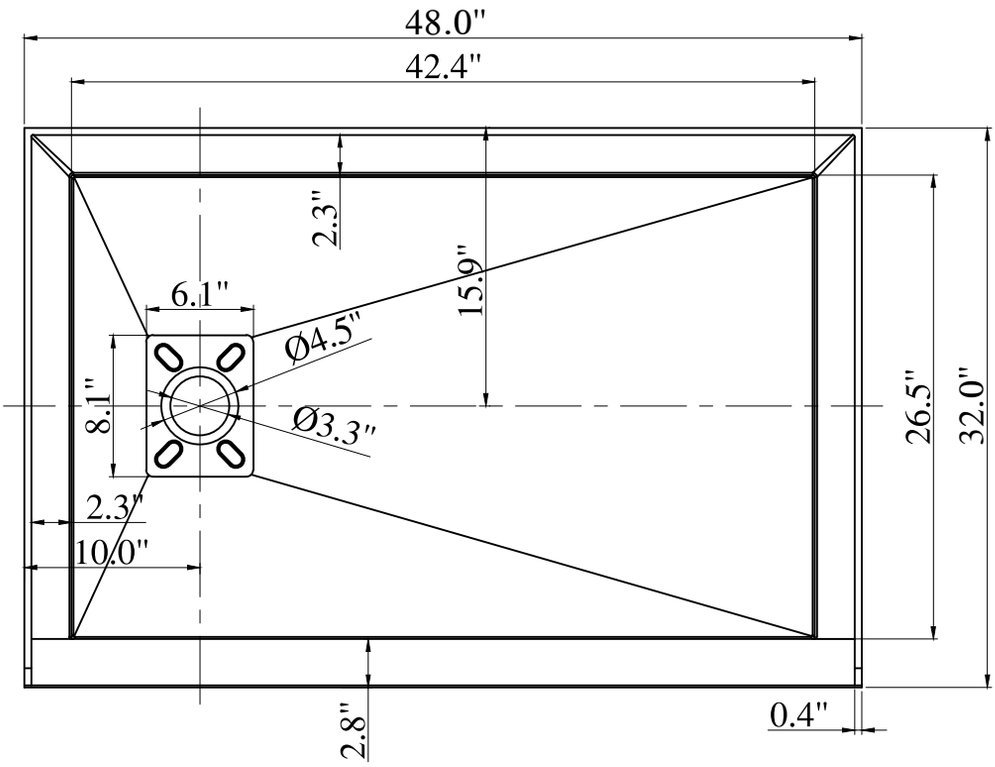

Model number:
**GB-2525-104-BL**

# DIMENSIONS

Streamline

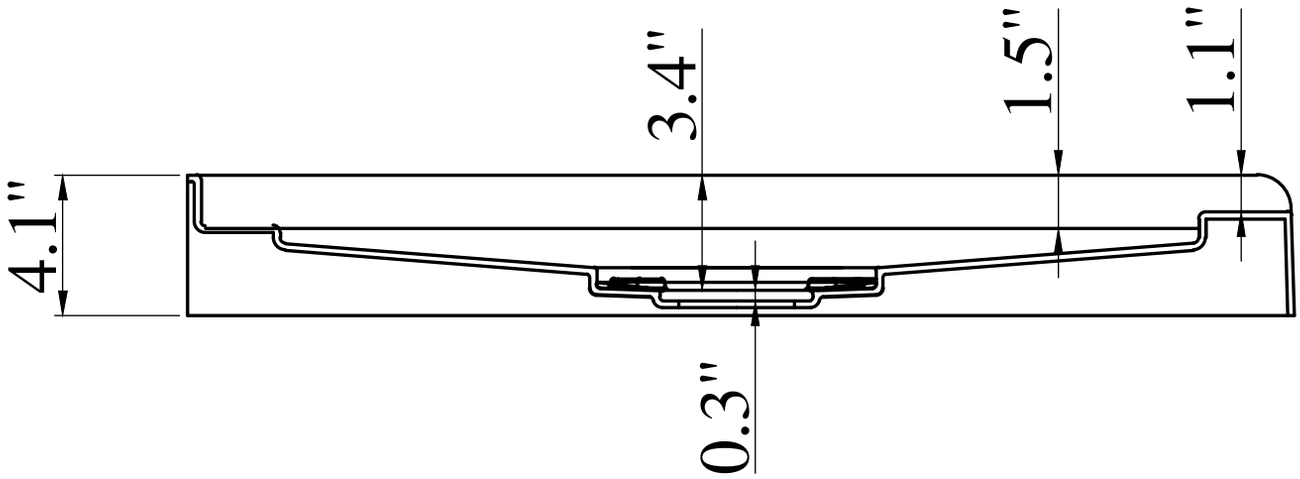


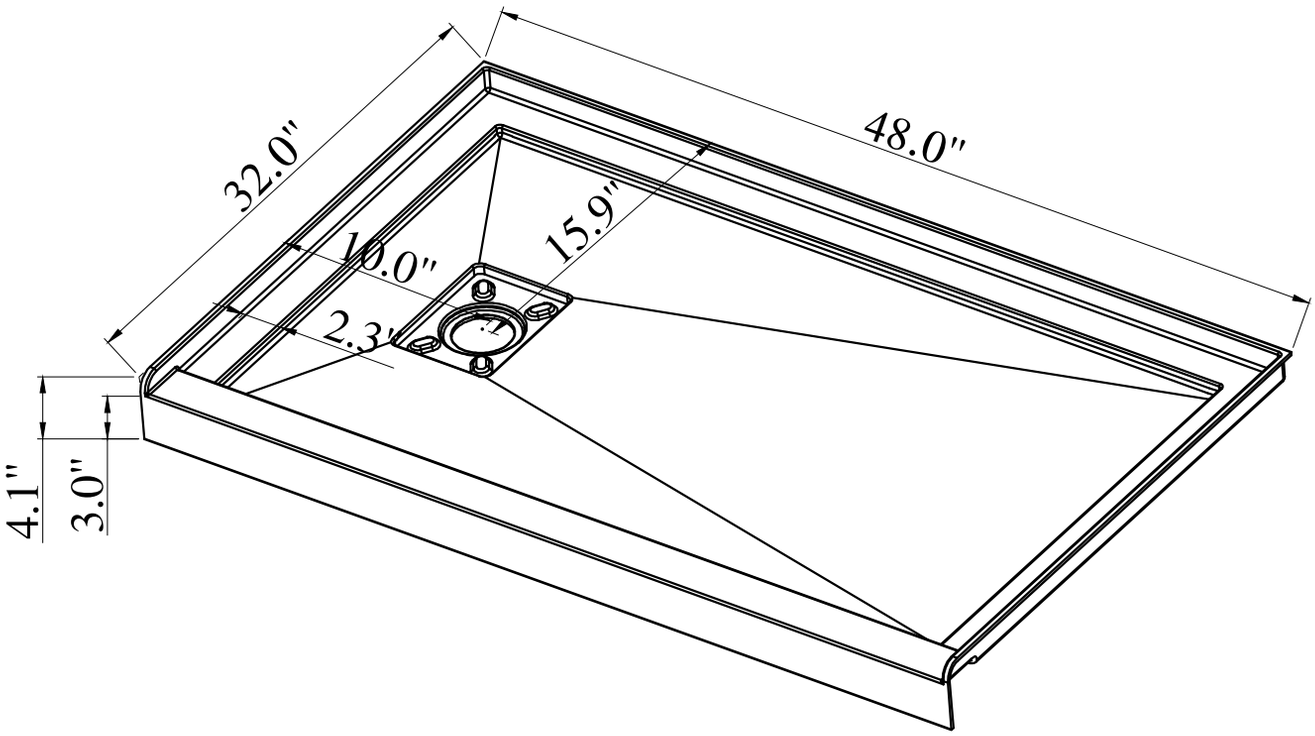


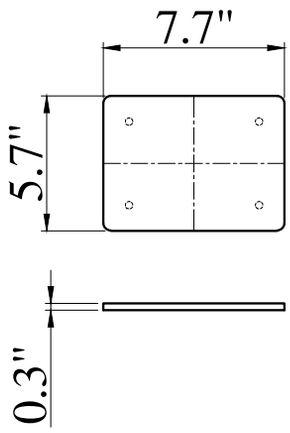
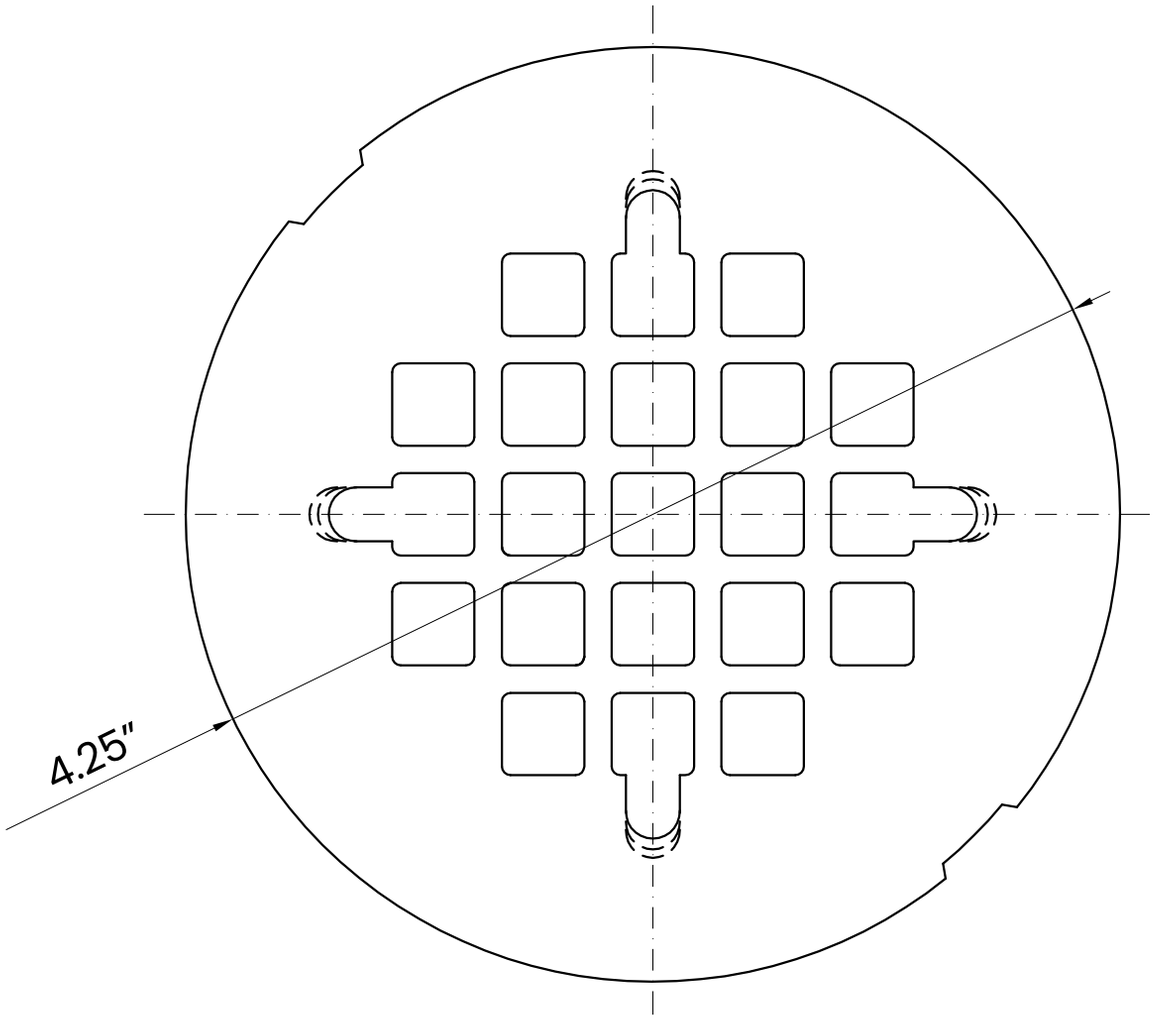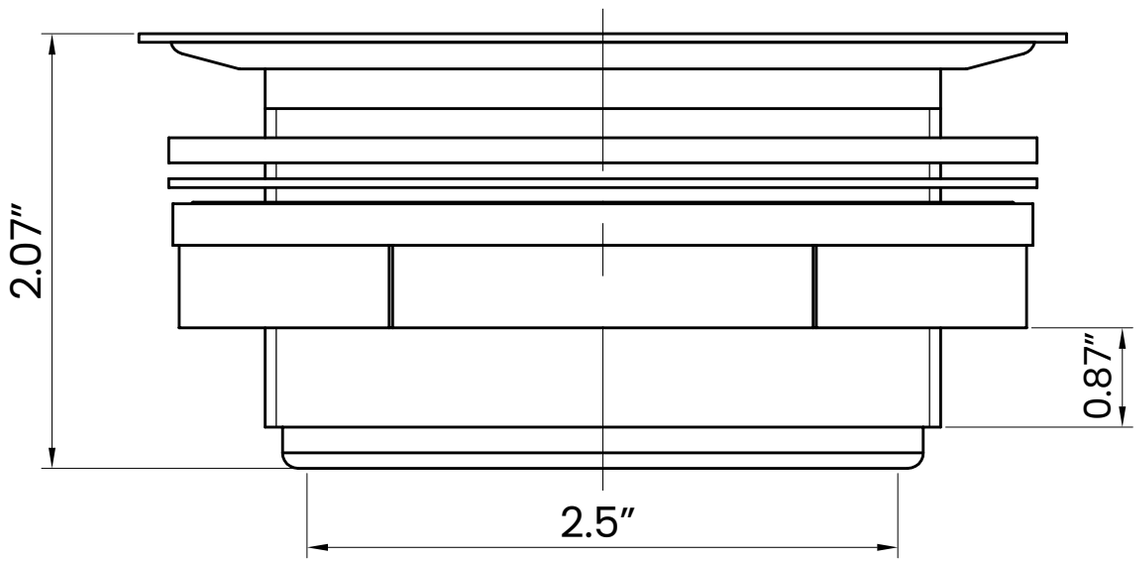
# DIMENSIONS