# Assembly Instruction

| 4'6" | | |
|---|---|---|
| A | Headboard | 1 pc |
| B | Footboard | 1 pc |
| C | Side Rail | 2 pcs |
| D | Center rail | 1 pc |
| E | Support Leg | 2 pcs |
| F | Slat | 26 pcs |
| G | Middle Holder | 13 pcs |
| H | End Holder | 26 pcs |
| I | JCBC M6 X 40 | 2 pcs |
| J | M4 x 65mm | 1 pc |
| K | M5 x 70mm | 1 pc |
| L | CSK M4 x 25mm | 2 pcs |
| M | CSK M4 x 16mm | 4 pcs |

Step 1: Attach Side Rail (C) to Headboard (A) and Footboard (B) by pushing the bracket down to fit it.

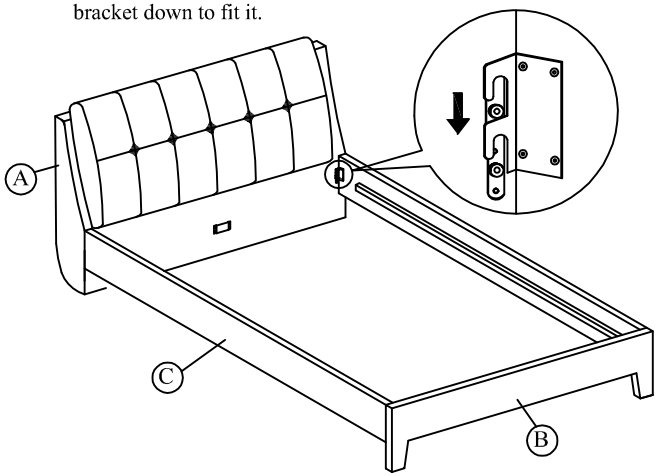


Step 2: Attach the support legs (E) to the center rail (D) of the bed as shown.

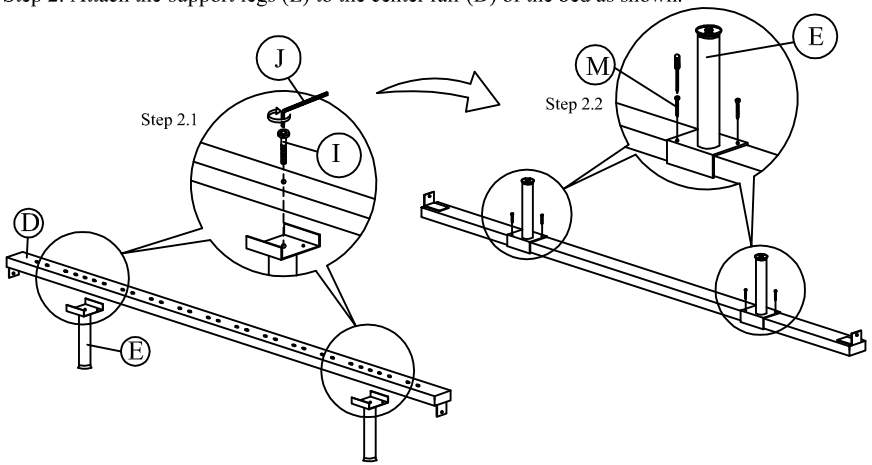


Step 3: Slide the center rail (D) to the headboard (A) and footboard (B). Tighten screws (L) using screw driver (not included) to the headboard (A) and footboard (B)

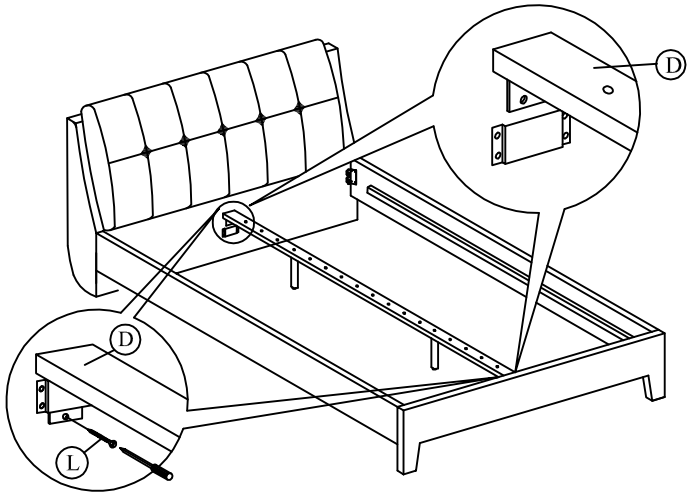

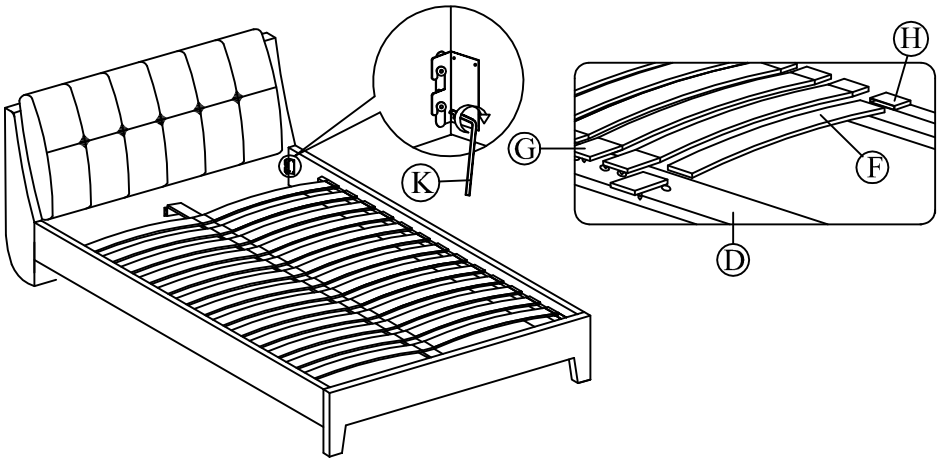
Step 4: Tighten all the 4 corner ,follow by assembly of the slat holders with LVL slats as shown.