FDYWC013BK
FDYWC013BN
FDYWC013GY

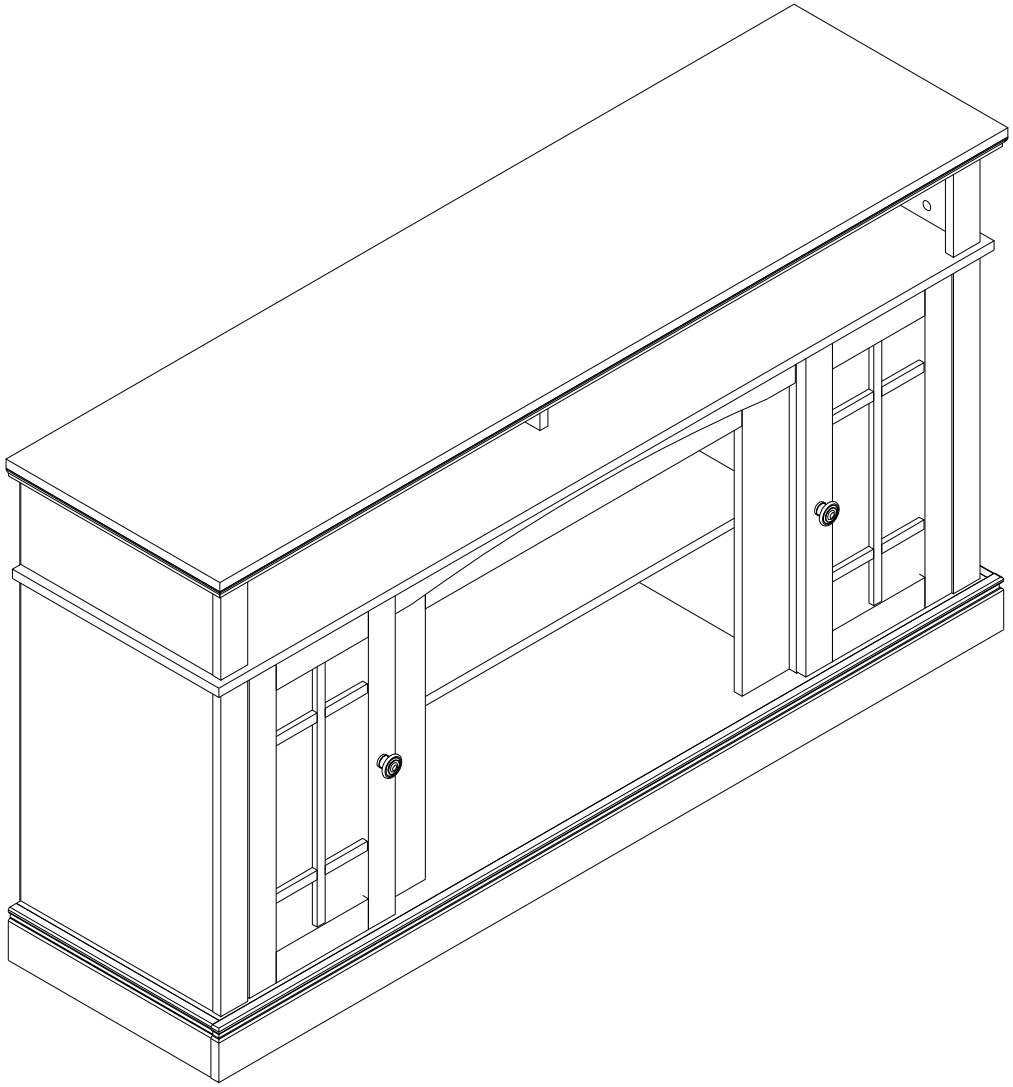

⚠ SAFETY INFORMATION

WARNING:Max load: 150 lbs tabletop, 15 lbs per drawer:
· Overloading risks instability and damage

WARNING: To prevent serious injury or death from furniture tip-overs:
· Alwayanchor furniture to the wall. Anchoring is ESSENTIAL to prevent tip-overs
· Never allow children to climb, stand, or play on any furniture.
· Always supervise children around furniture.
· Keep remote controls, toys, cosmetics, and other attractive items out of reach from the topsof furniture

MAINTENANCE

Wipe the surface with a soft, damp cloth and dry immediately.
Avoid using chemical cleaners, solvents, or abrasive pads that could damage the finish.
Do not place hot, wet, or heavy items directly on the surface.
Keep the furniture away from direct sunlight and excessive humidity to prevent warping or discoloration.
Check and tighten all screws periodically to maintain stability.

Warranty & Support

Limited Warranty
This product is backed by a limited warranty that covers manufacturing defects under normal household use.☐

Parts List

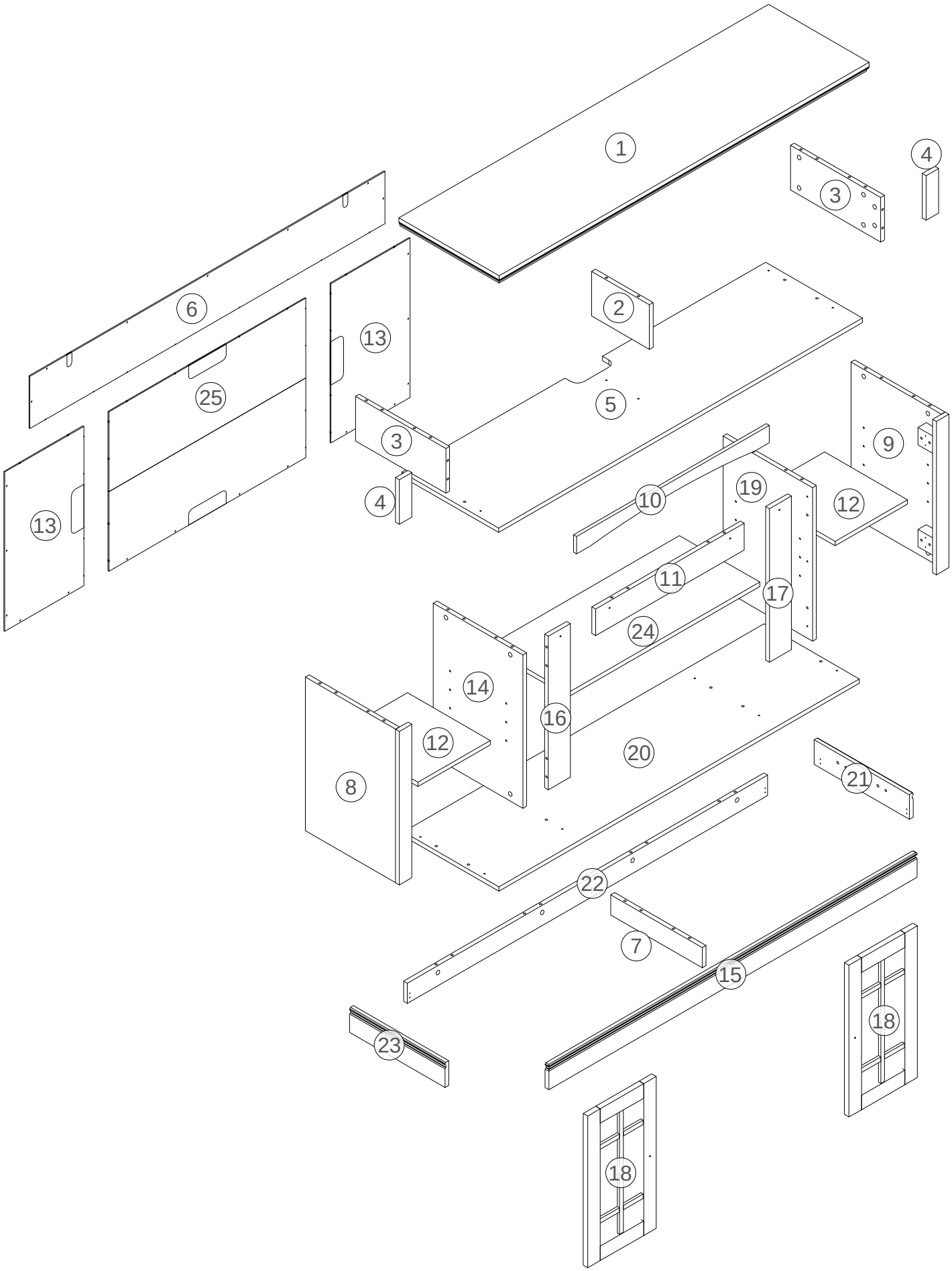

Hardware

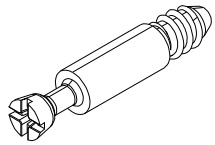

A x 46+1sets

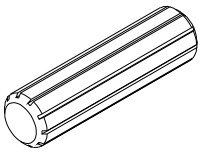

Ø8X30MM

B x 36+1sets

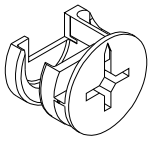

Ø15*11.5MM

C x 46+1sets

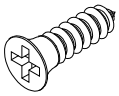

Ø3.5X14MM

D x 48+1sets

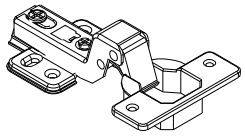

E x 4sets

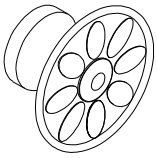

F x 2sets

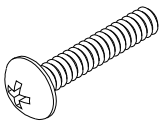

M4X18MM

H x 2sets

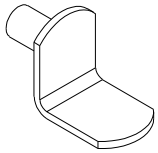

I x 12sets

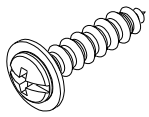

J x 37+1sets

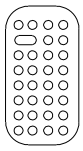

K x 1sets

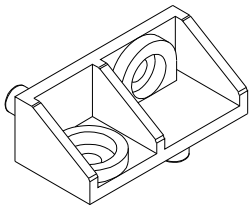

L x 8sets

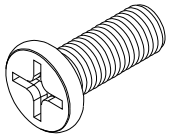

M x 16sets

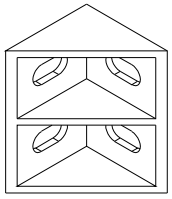

N x 6sets

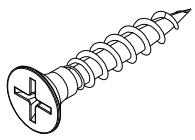

Ø4X25MM

O x 4sets

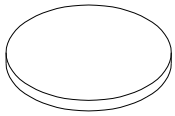

P x 46sets

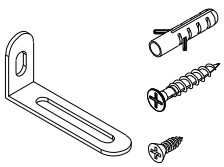

Q x 2sets

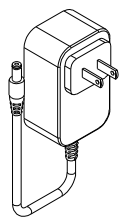

S x 1sets

How to use the cam lock system

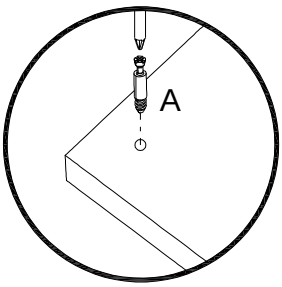

1.Screw cam bolt into panel

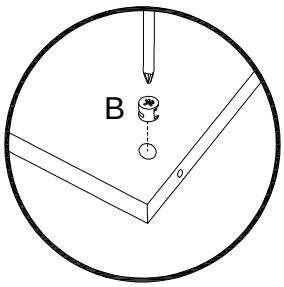

2.Push cam into panel - arrow feature on cam top points to panel edge

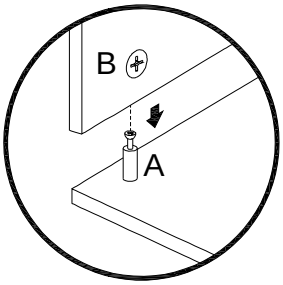

3.Aligu cam bolt(s) with cam(s) and insert all the way into cross-bored hole(s)

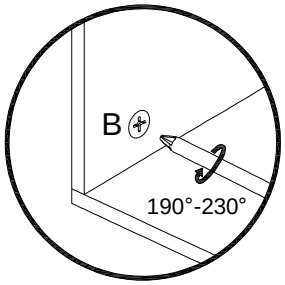

4.Rotate cam(s) clockwise 190°-230° to lock panels together

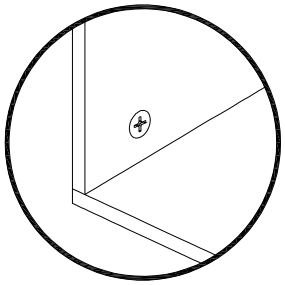

5.Panels should be tight against each other and connection should be rigid

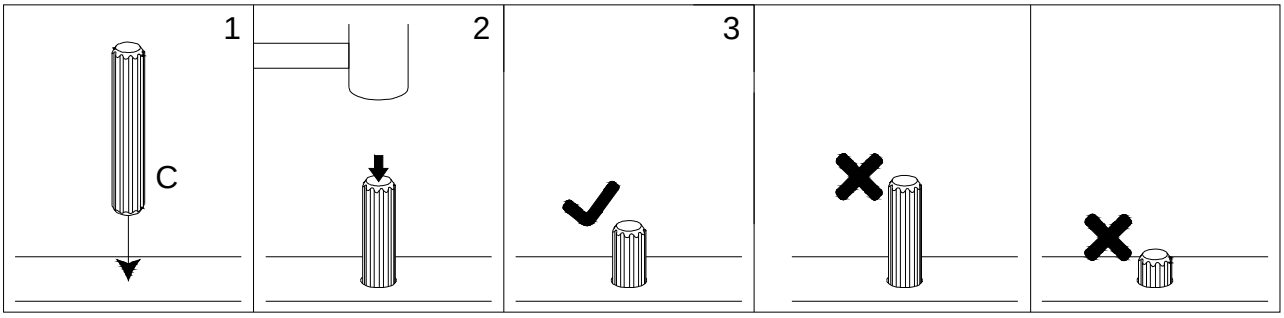

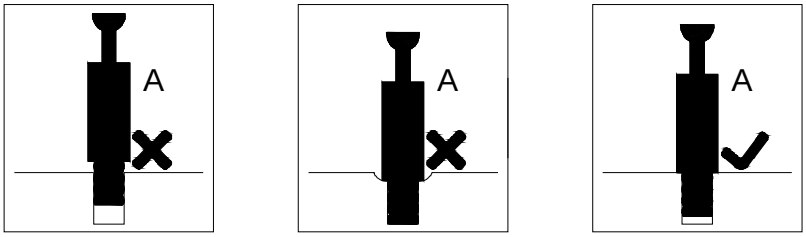

- Unit must be placed on a level surface or leveled with included hardware (when applicable)
- Do not sit or stand on or allow children to climb,sit or stand on the assembled product.
- For safety reasons,it is imperative that this unit be mounted to the wall.
- Do not use without installing the tip restraint.
- Unit can tip over causing severe injury or death,
- Do not exceed the recommended weight limits.
- Evenly distribute the weight on each level and always keep the heavier loads on the bottom.
- Before cutting,drilling or hammering into any wall or floor surface,verify the location of electrical. plumbing and gas lines.Cutting may cause serious injury.

Step 1

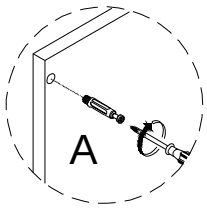
A

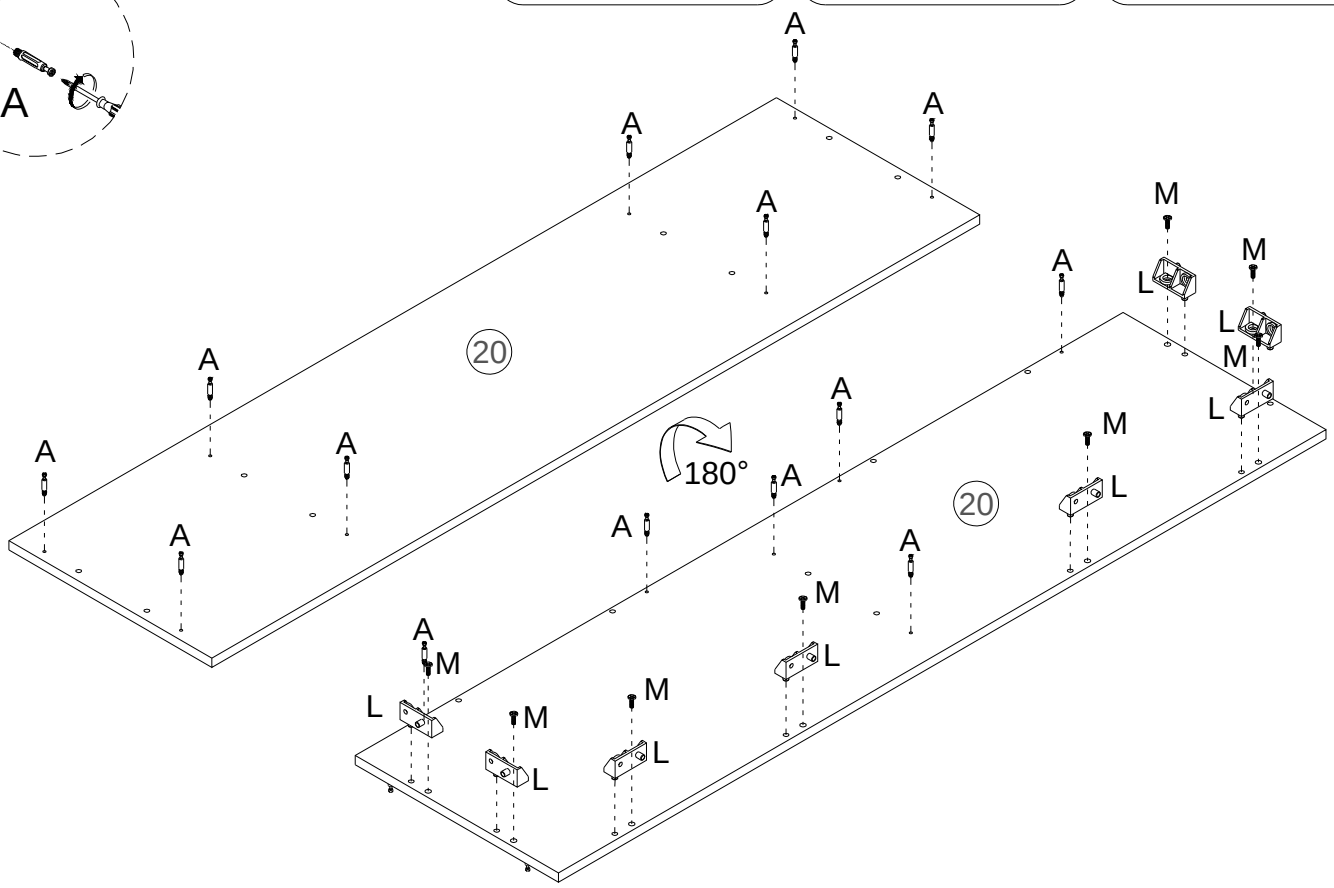
A
A x 4
L
L x 8
M
M x 8
20
180°
20

Step 2

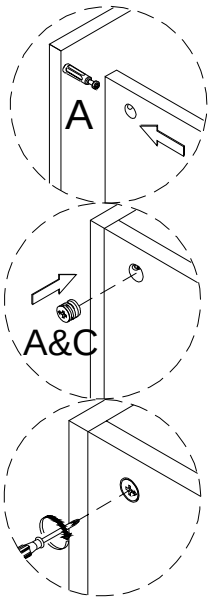
A
A&C

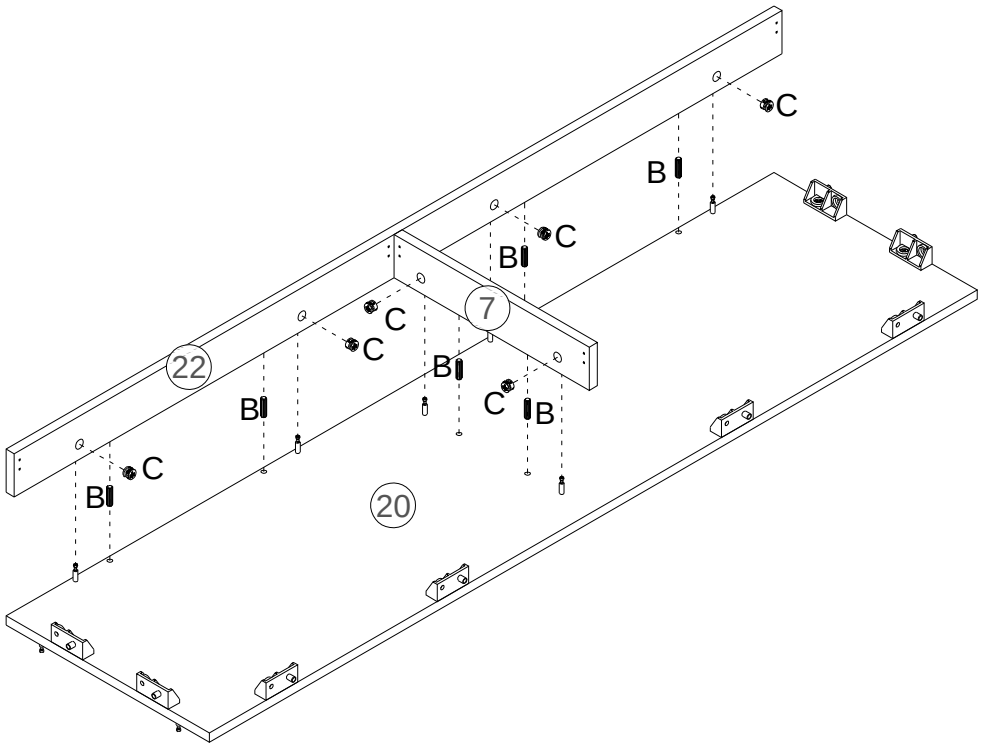
C
Ø15X11.5MM
C x 6
B
Ø8X30MM
B x 6
22
7
20

Step 3

M

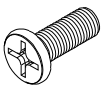

M x 8

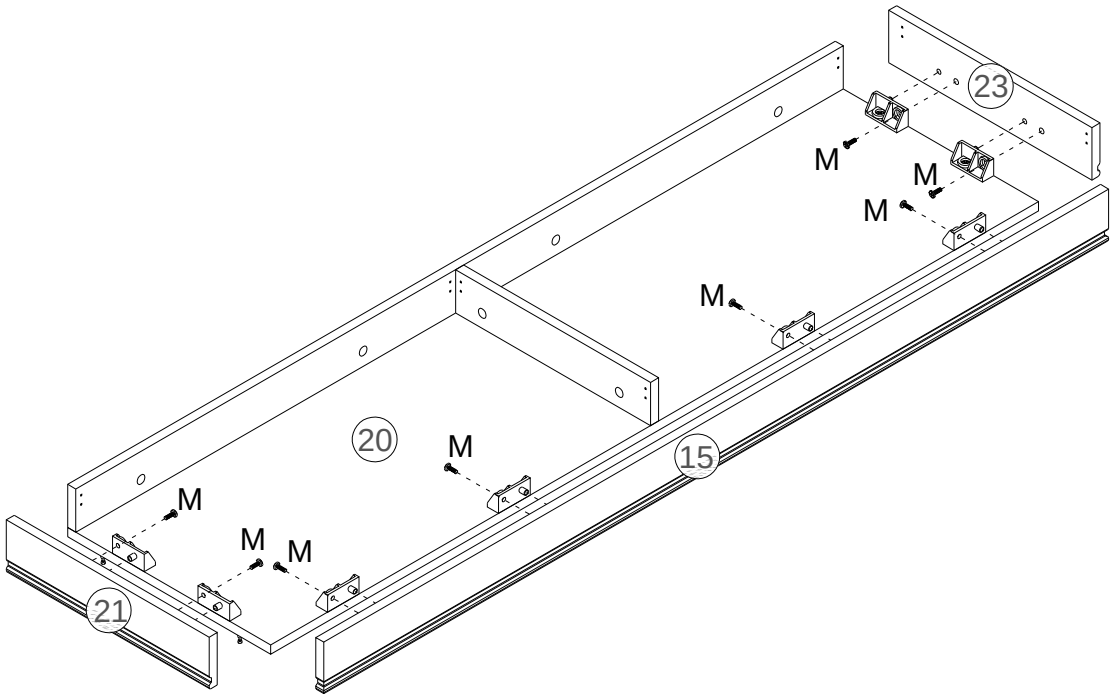

Step 4

D



Ø3.5X14MM

D x 24

N

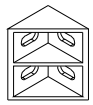

N x 6

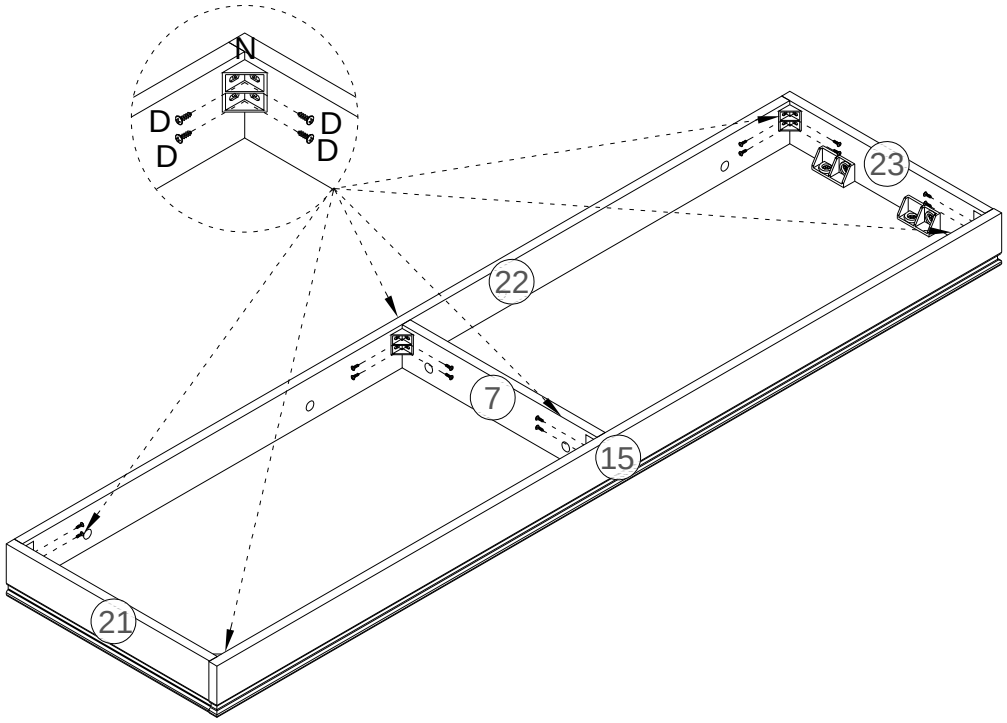

Step 5

A

A x 6

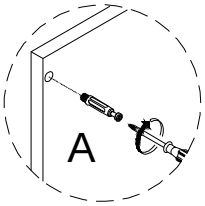

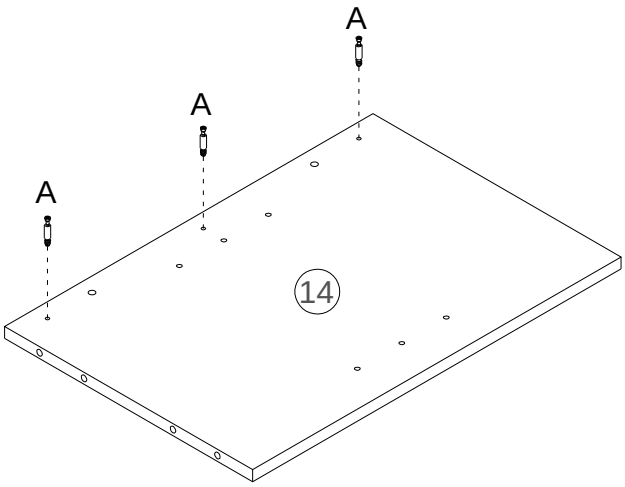

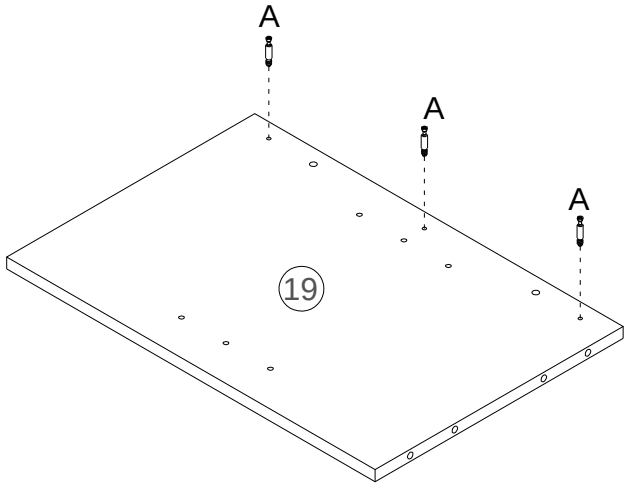

Step 6

C

Ø15X11.5MM

C x 6

B

Ø8X30MM

B x 4

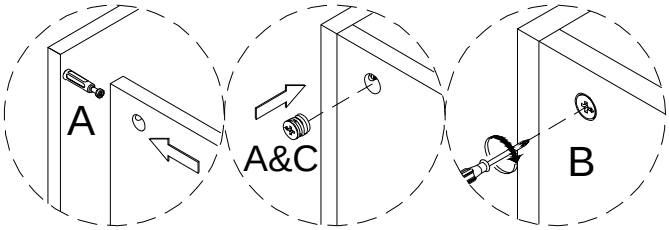

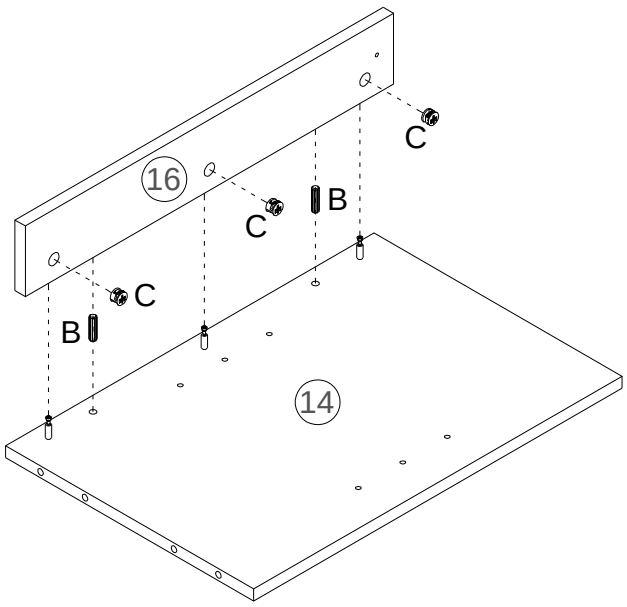

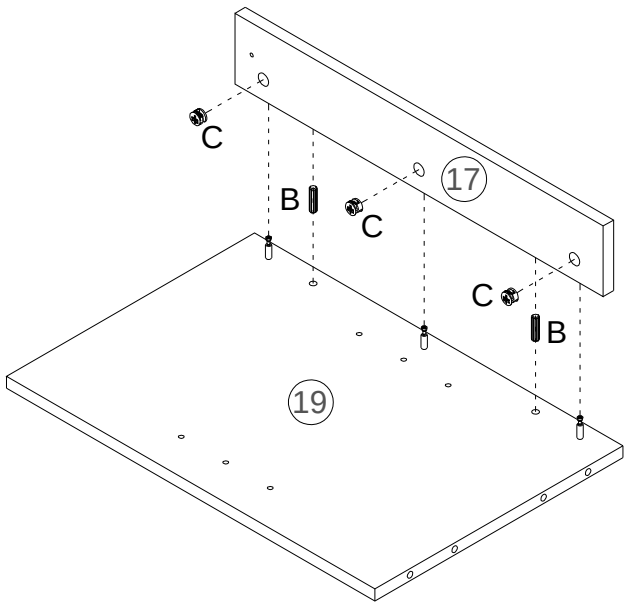

Step 7

O

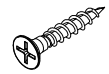

Ø4X25MM

M x 8

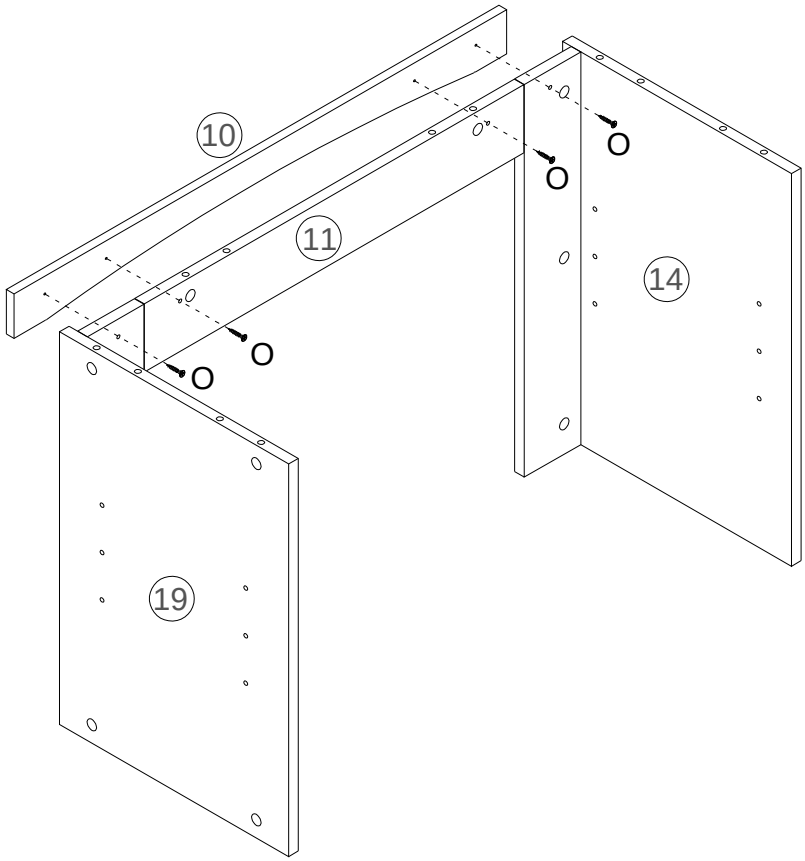

Step 8

C



Ø15X11.5MM

C x 6

B

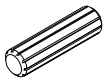

Ø8X30MM

B x 4

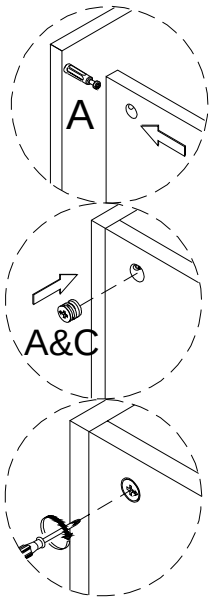

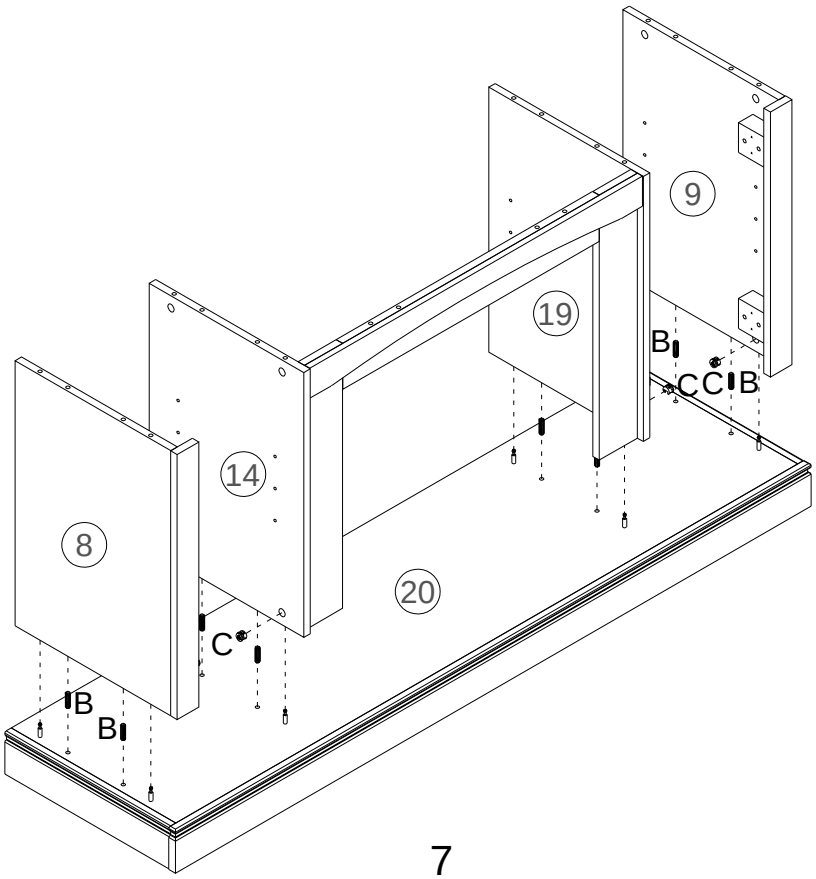

Step 9

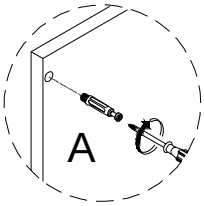

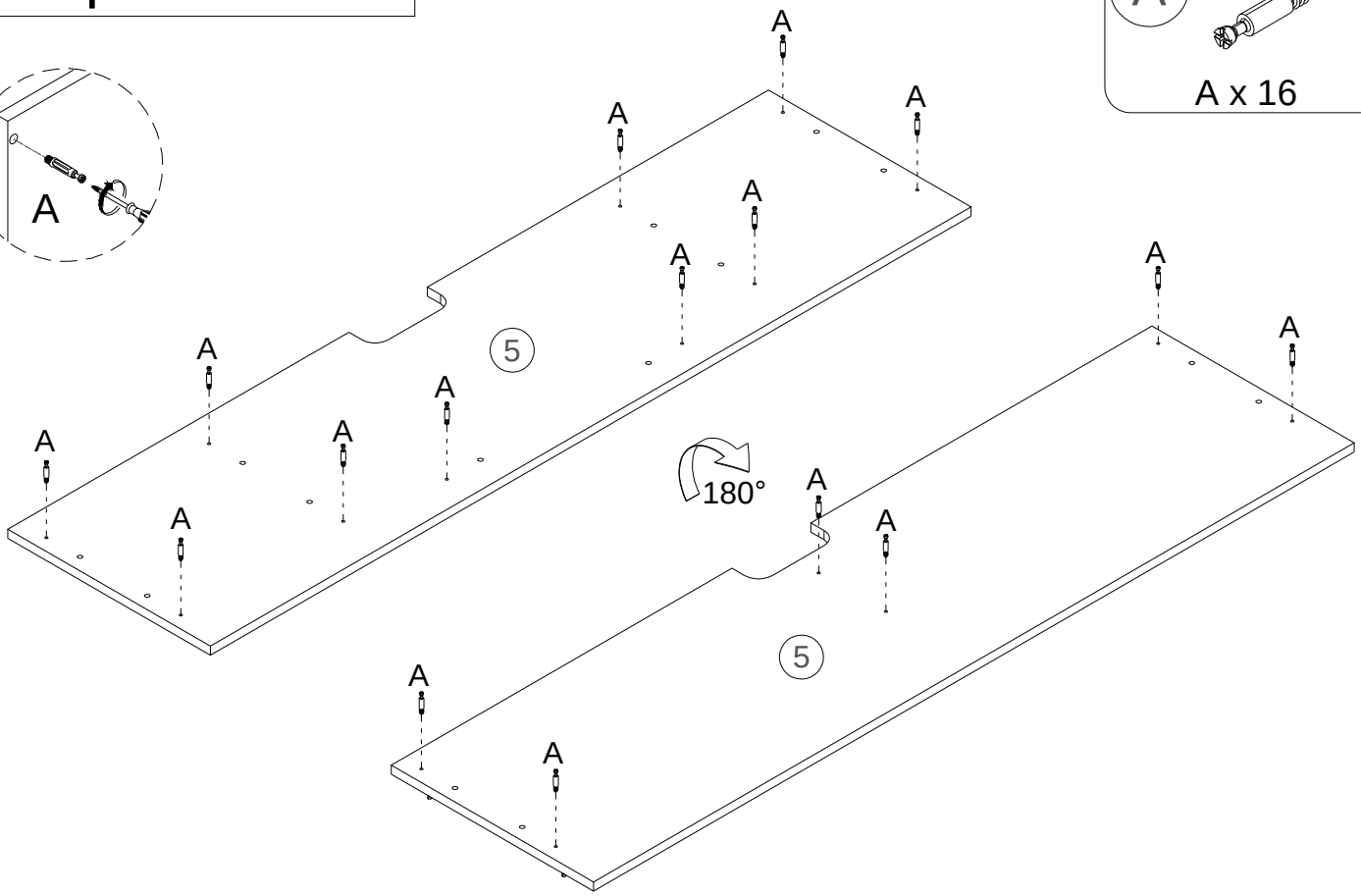

Step 10

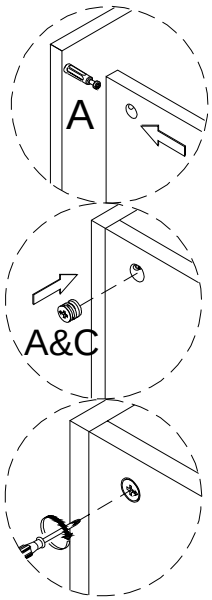

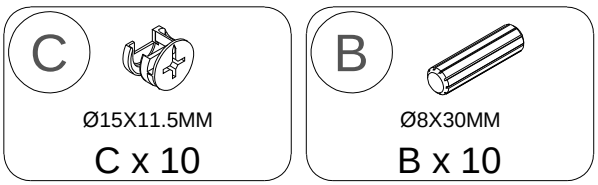

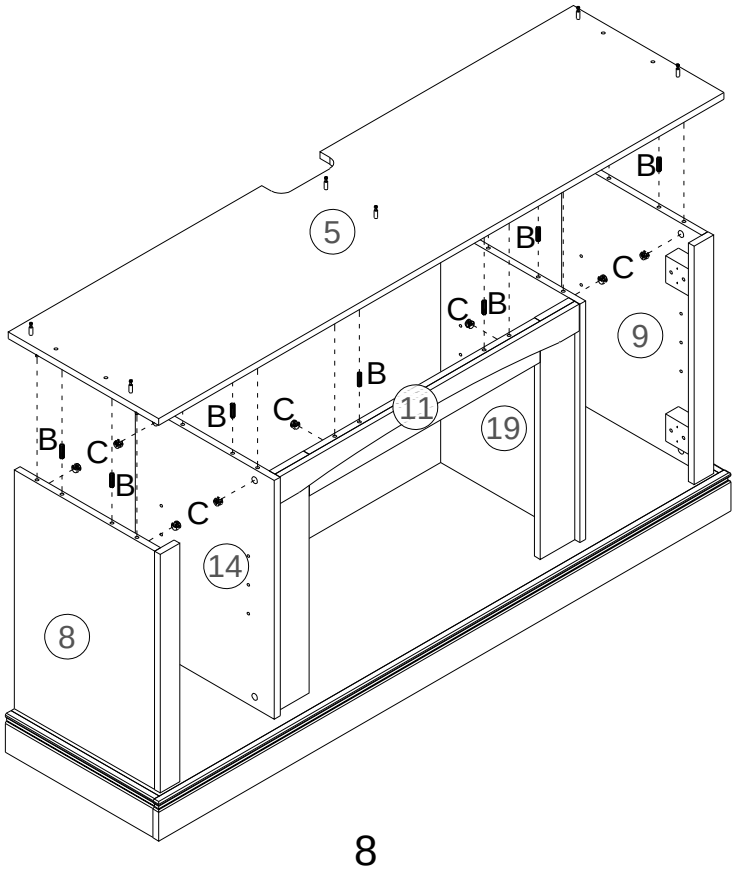

Step 11

C



Ø15X11.5MM

C x 4

A

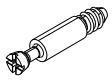

A x 4

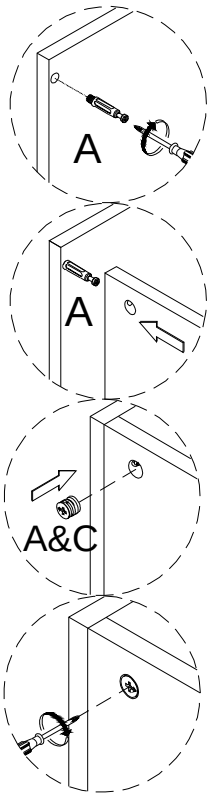

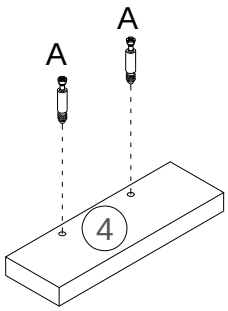

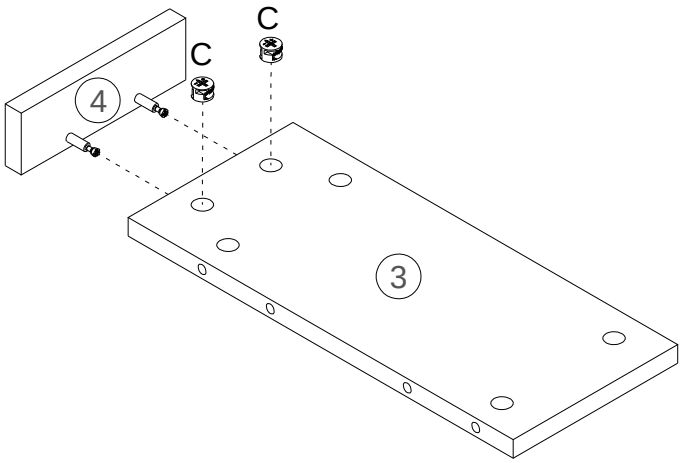

X2

Step 12

C



Ø15X11.5MM

C x 6

B

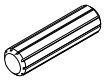

Ø8X30MM

B x 4

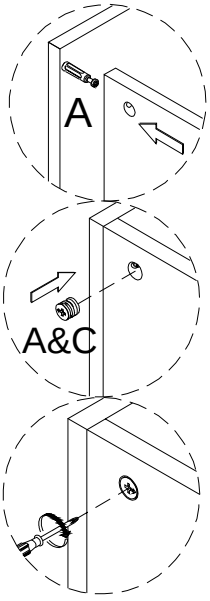

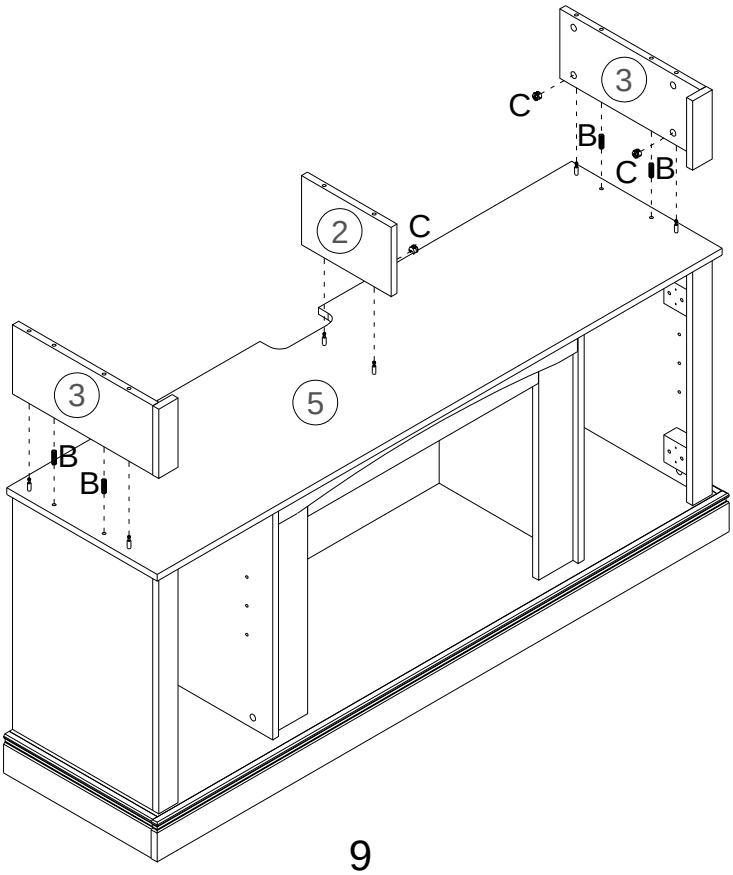

Step 13

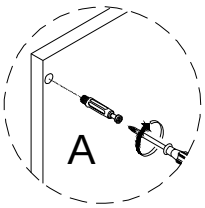

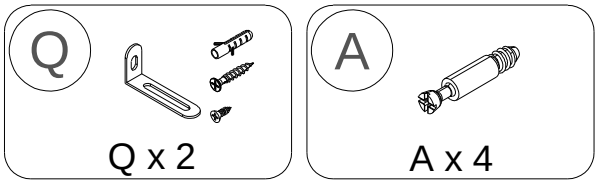

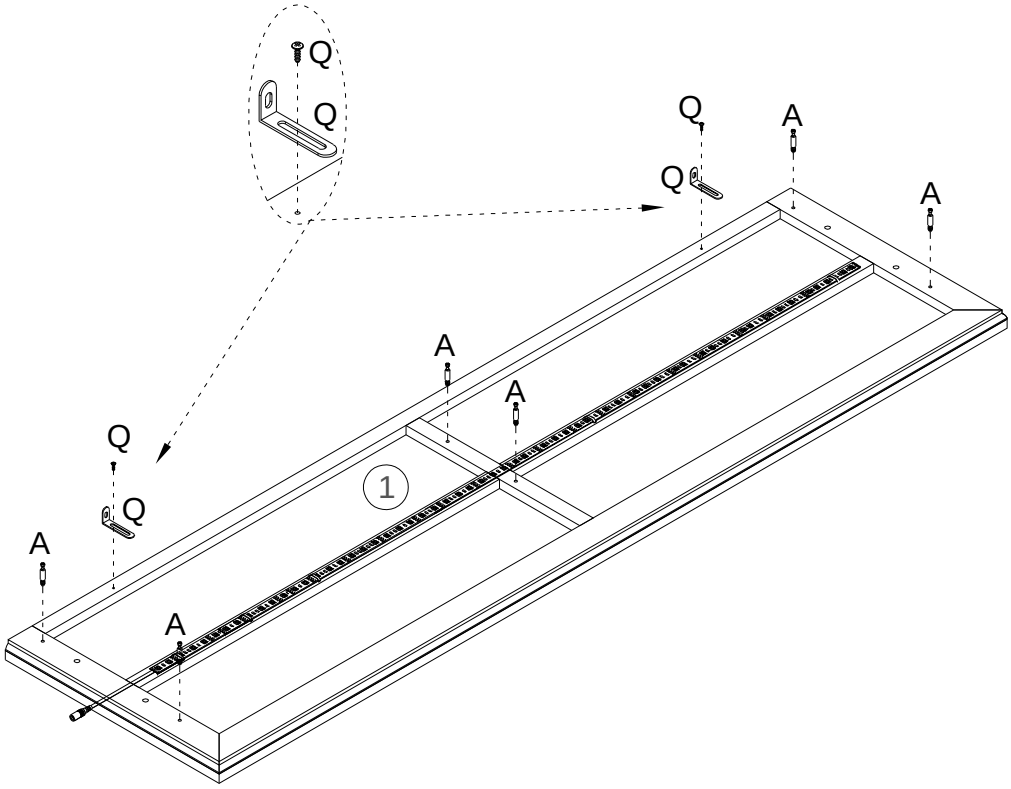

Step 14

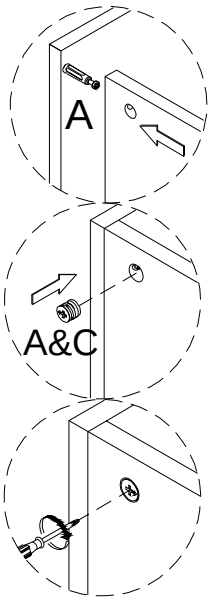

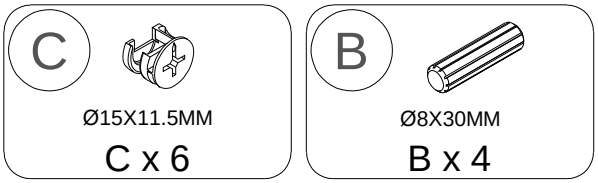

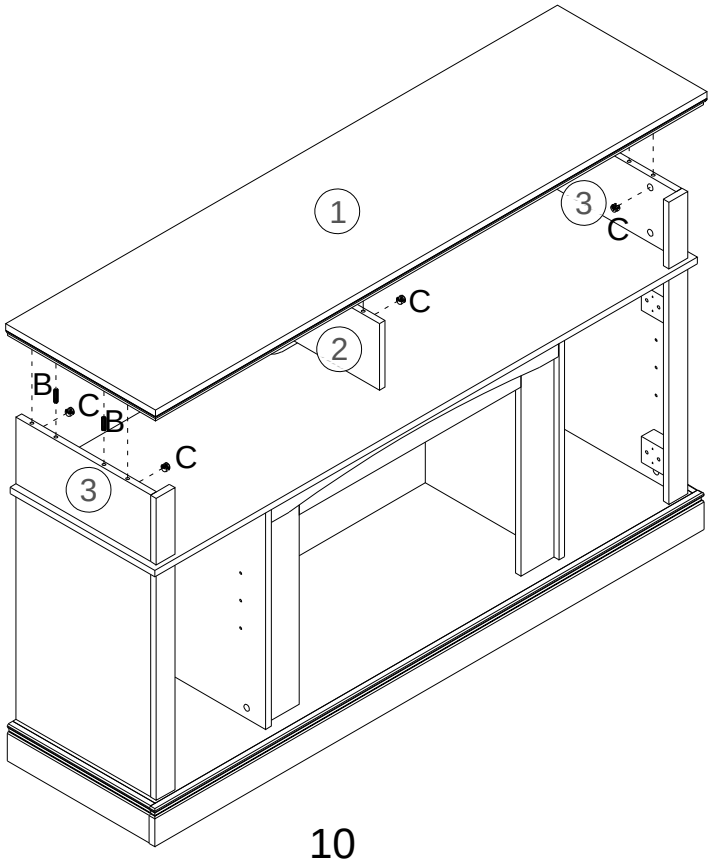

Step 15

TV STAND ASSEMBLY

J

J x 37

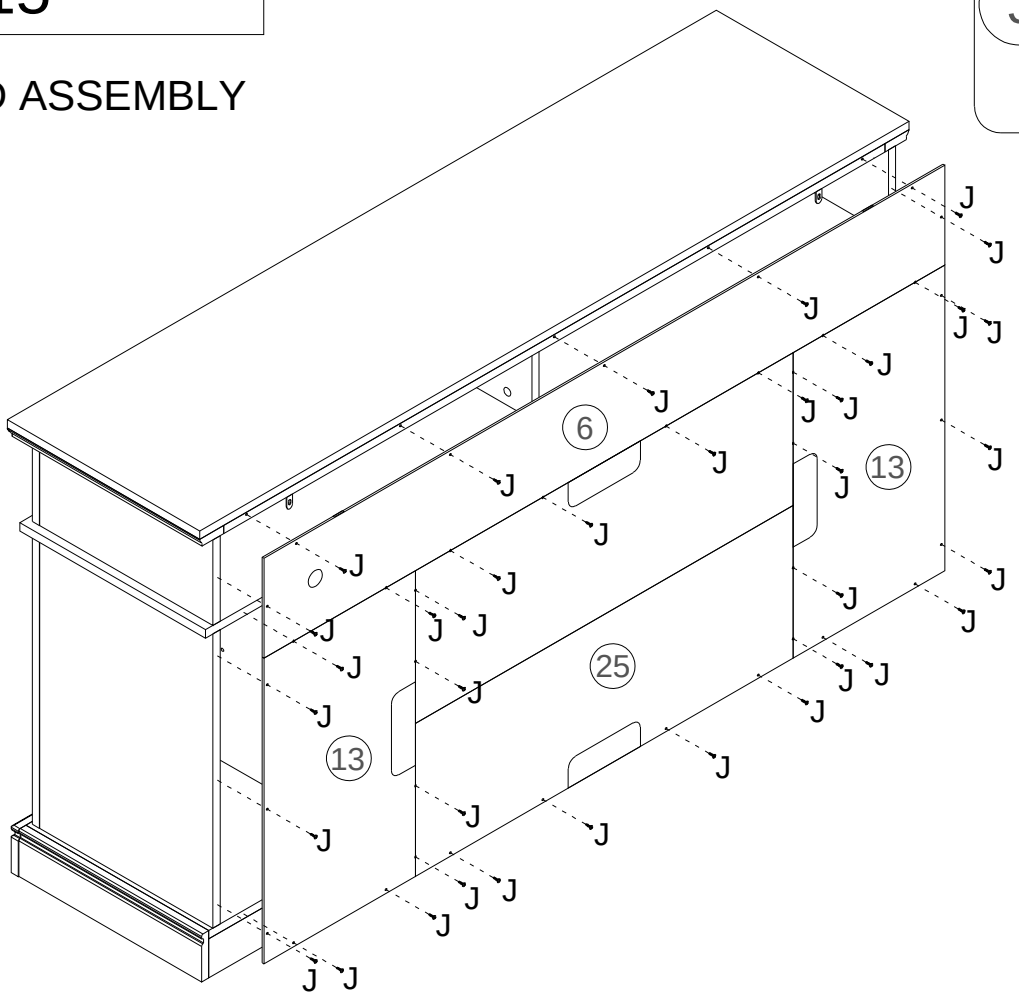

Step 16

S

S x 1

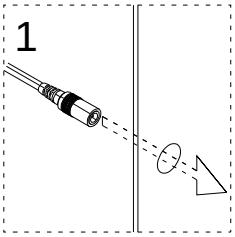

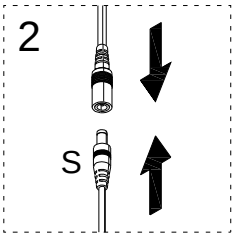

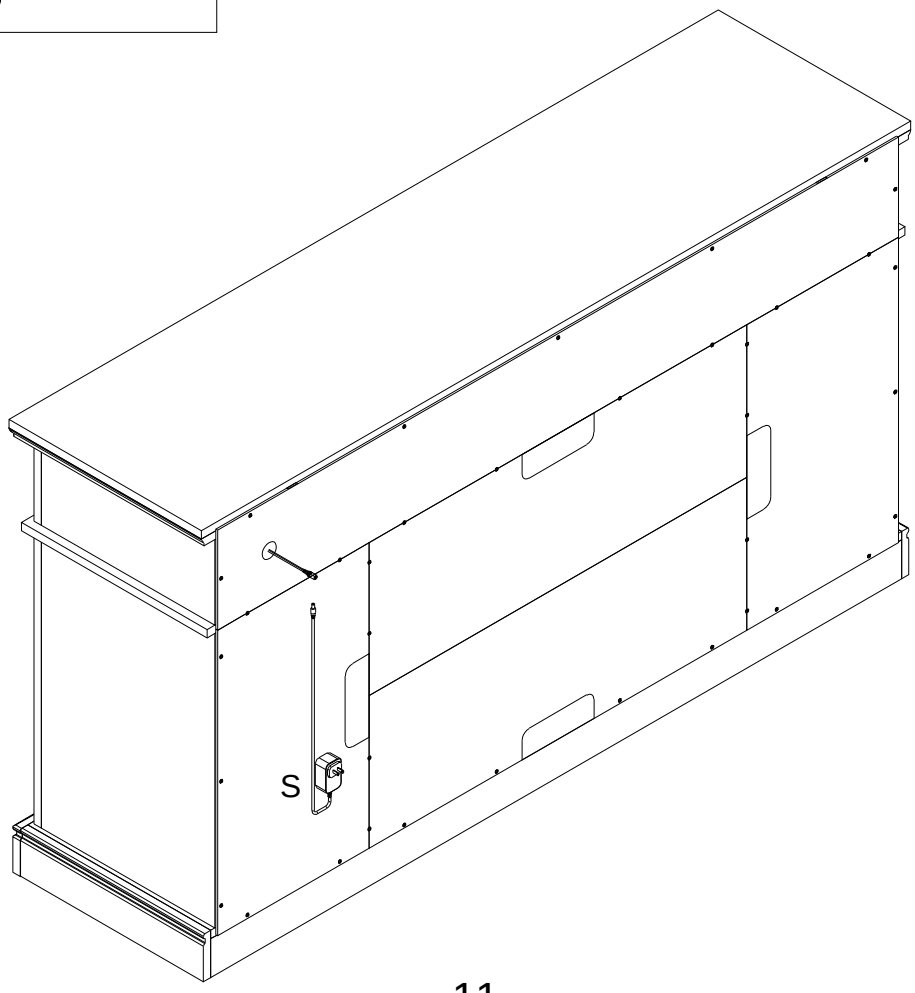

Step 17

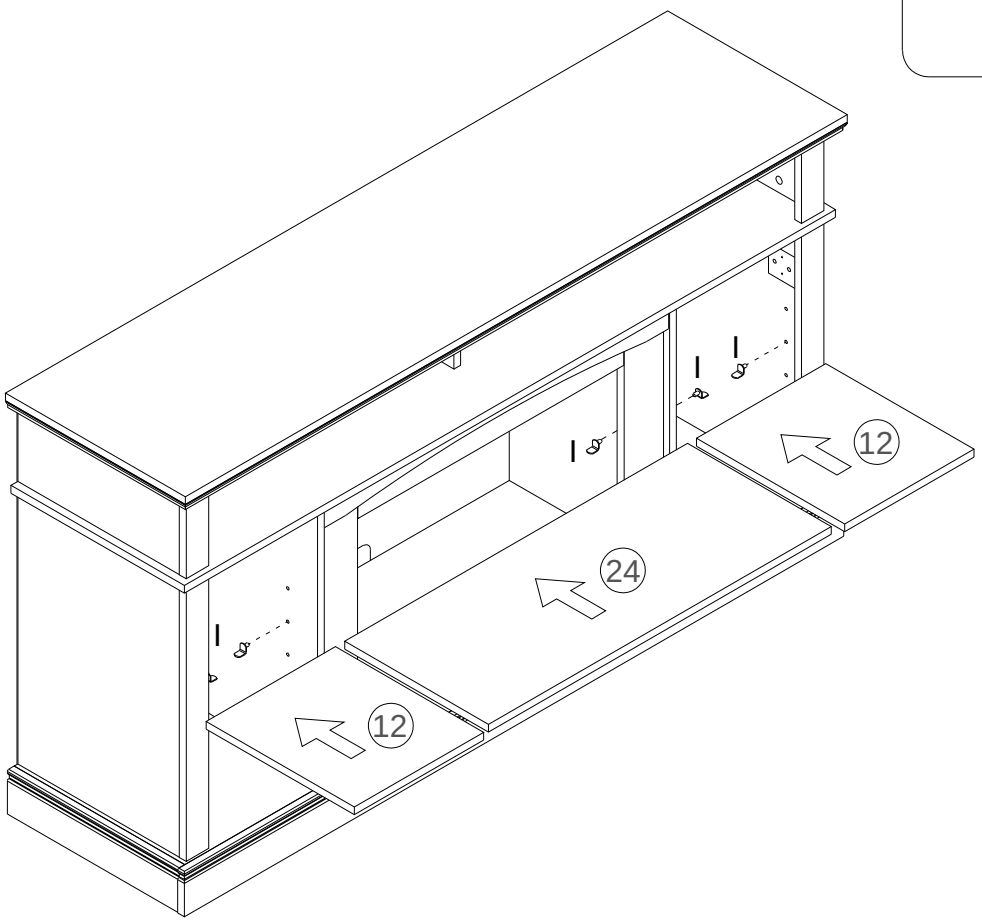

I

I x 12

Step 18

H

N4X18MM

H x 2

D

Ø3.5X14MM

D x 8

E

E x 4

F

F x 2

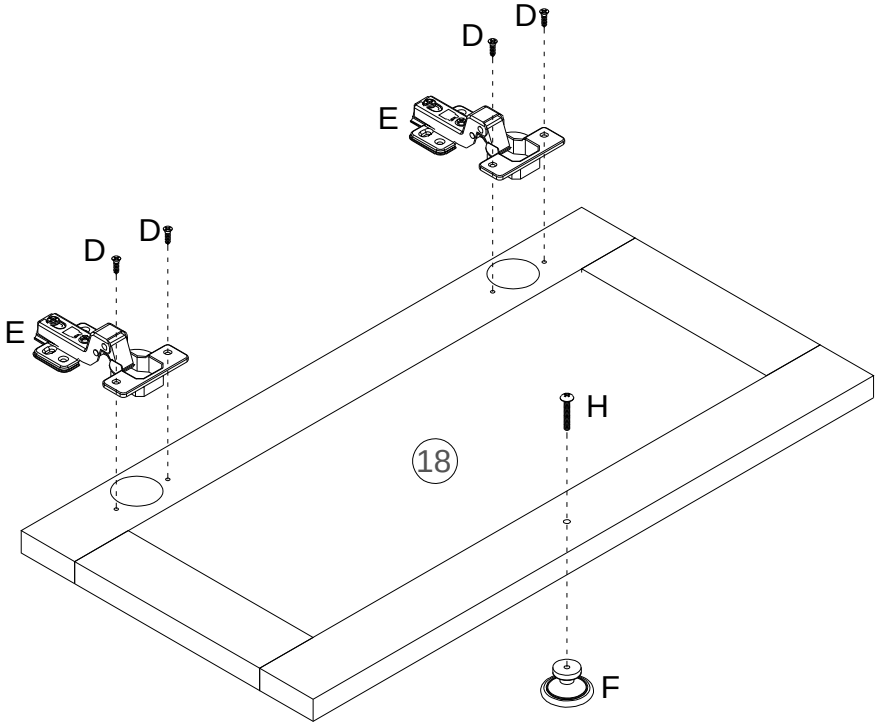

X2

Step 19

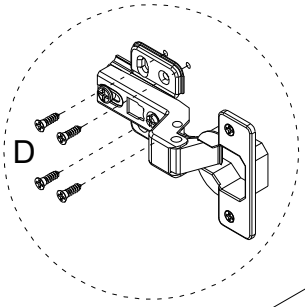

D

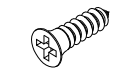

3.5X14MM

D x 16

Doors Adjustment

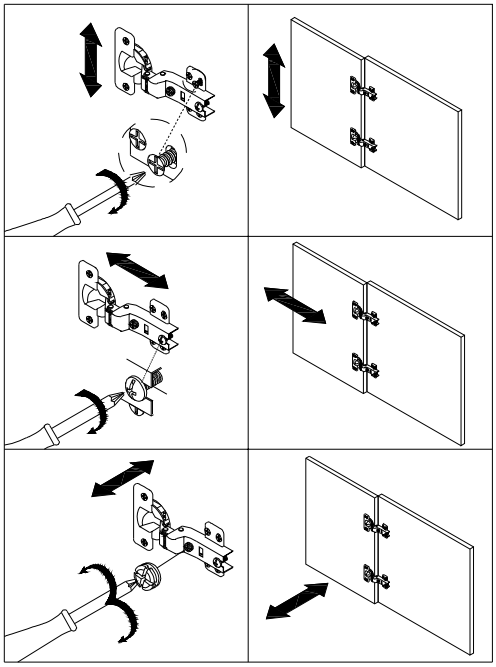

Step 20

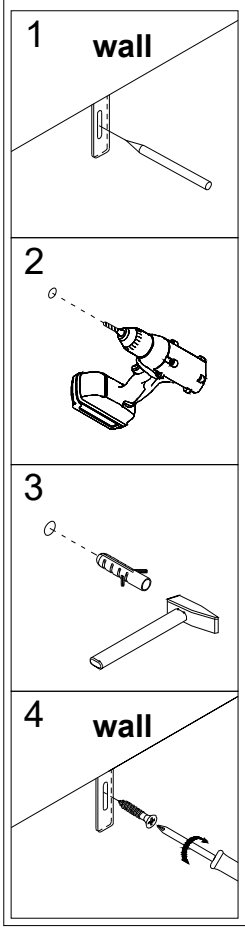

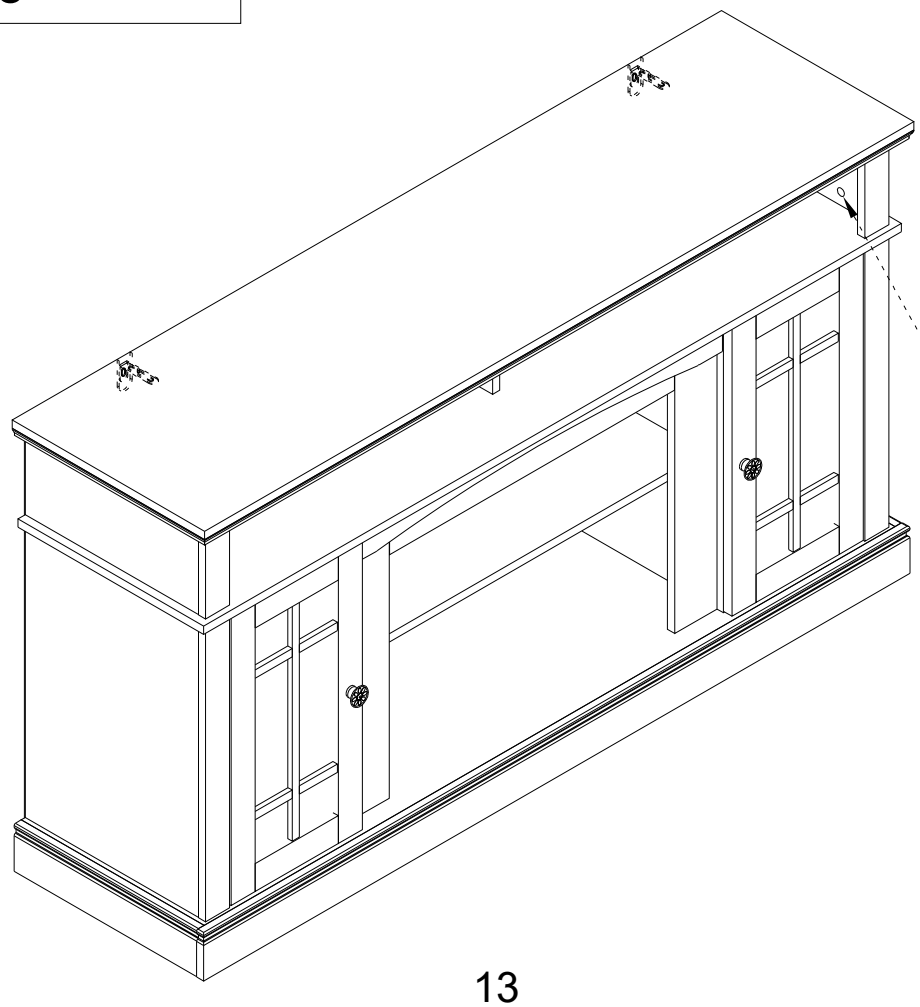

Q

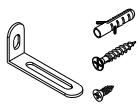

Q x 2

P

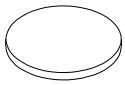

P x 46

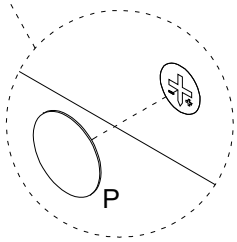

Step 21

FIREPLACE MANTEL ASSEMBLY

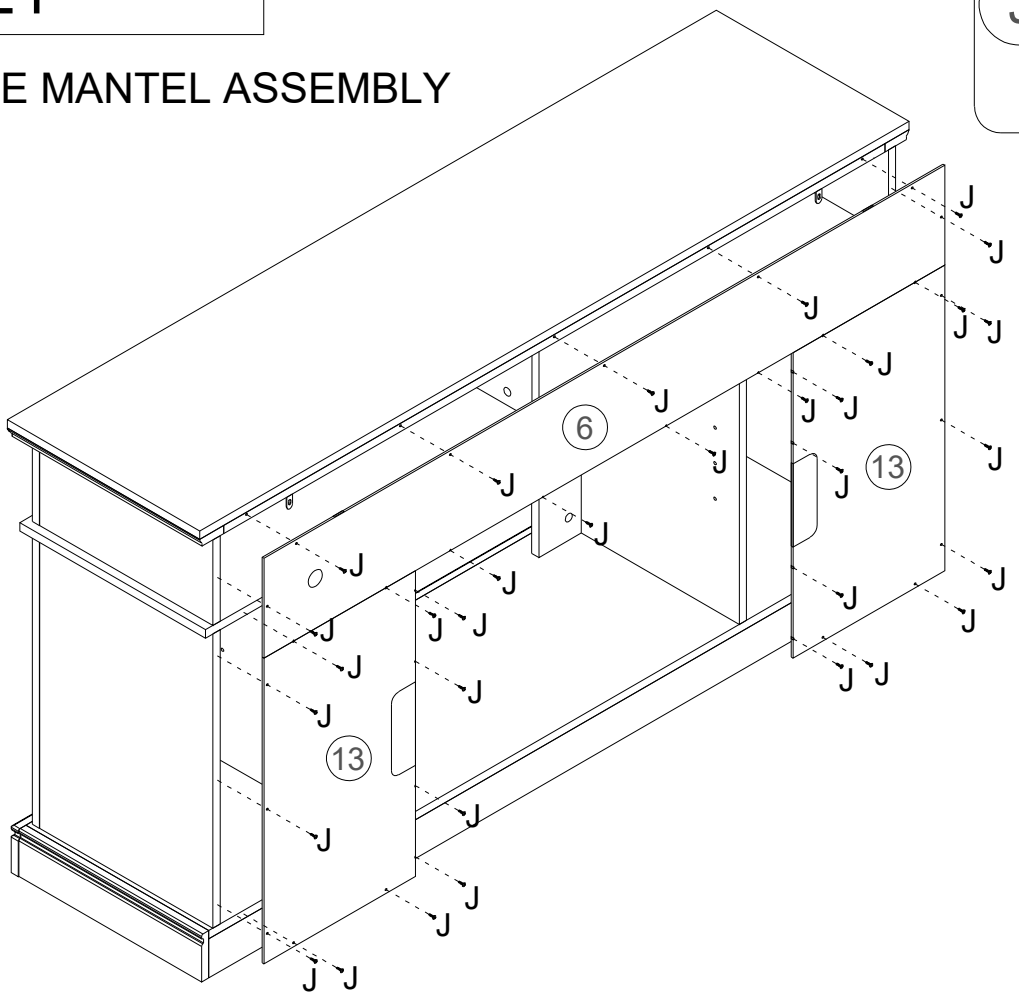

J x 33

Step 22

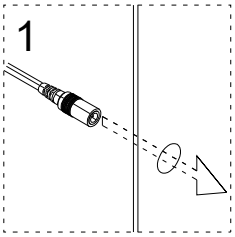

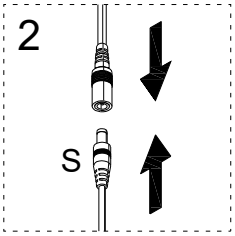

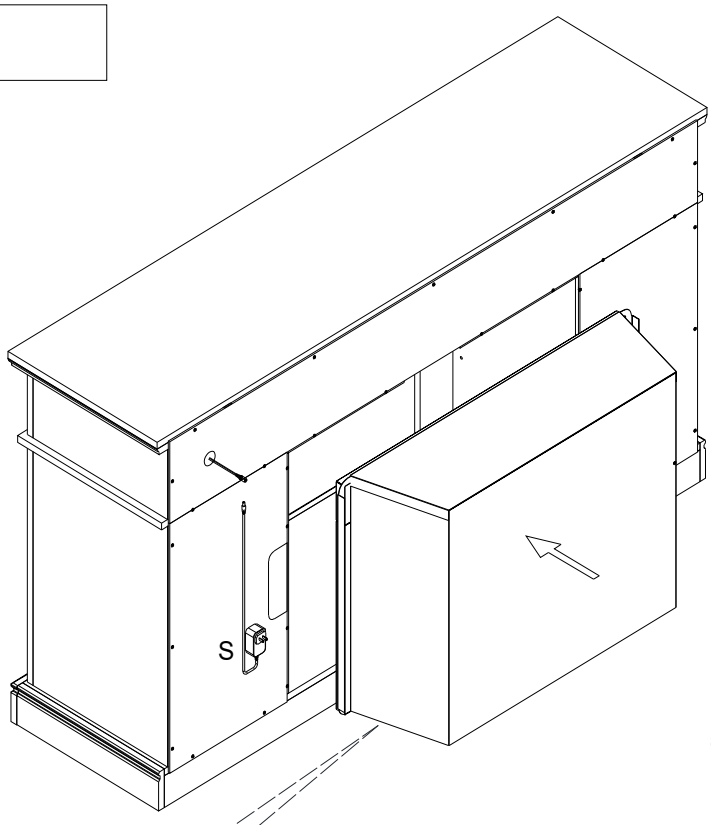

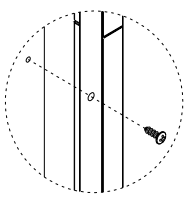

The specific installation method for placing the electric fireplace can be found in the electric fireplace user manual.

S x 1

Step 23

I

I x 8

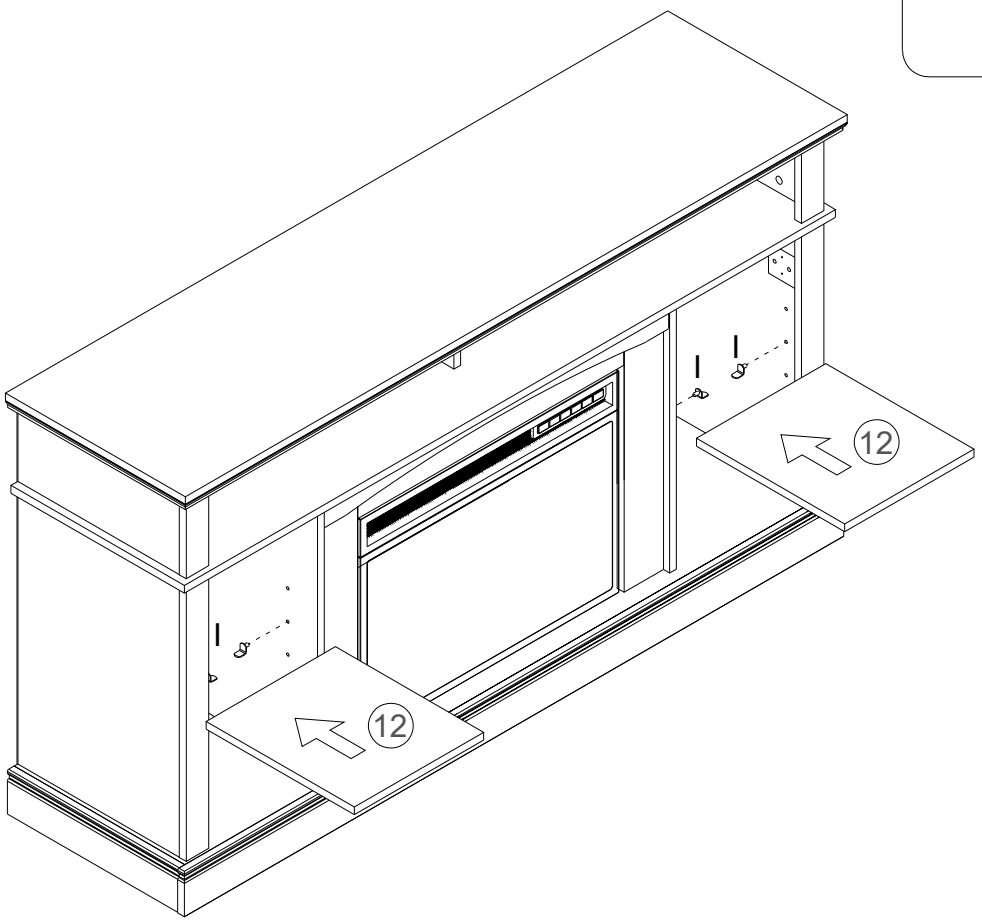

Step 24

H

N4X18MM

H x 2

D

3.5X14MM

D x 8

E

E x 4

F

F x 2

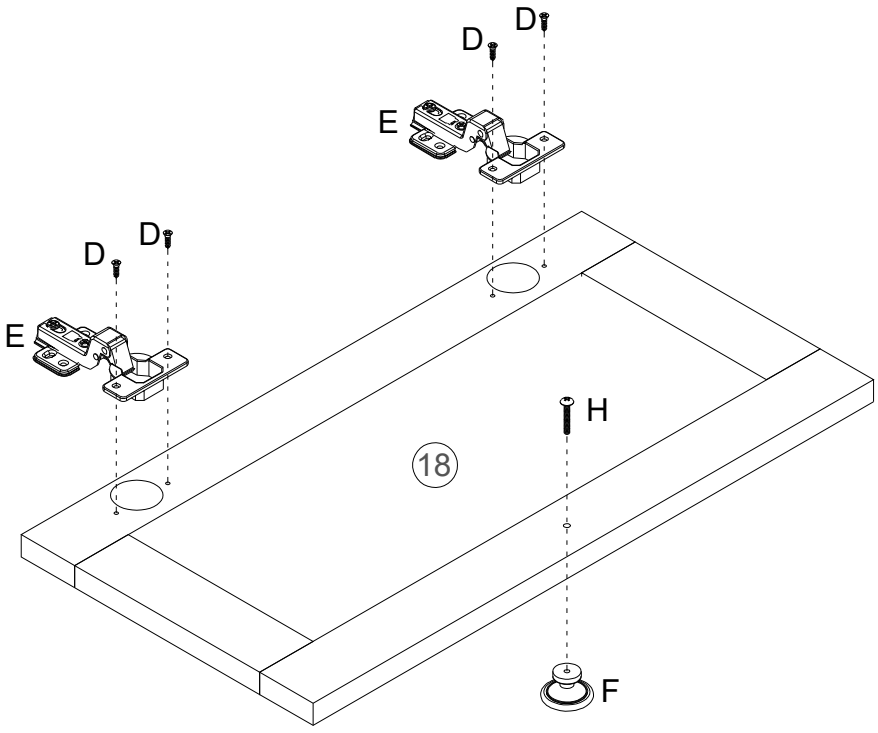

X2

Step 25

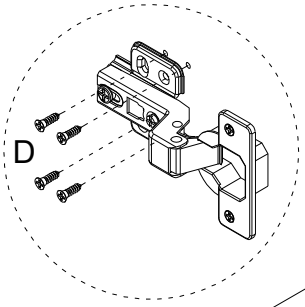

D

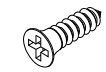

3.5X14MM

D x 16

Doors Adjustment

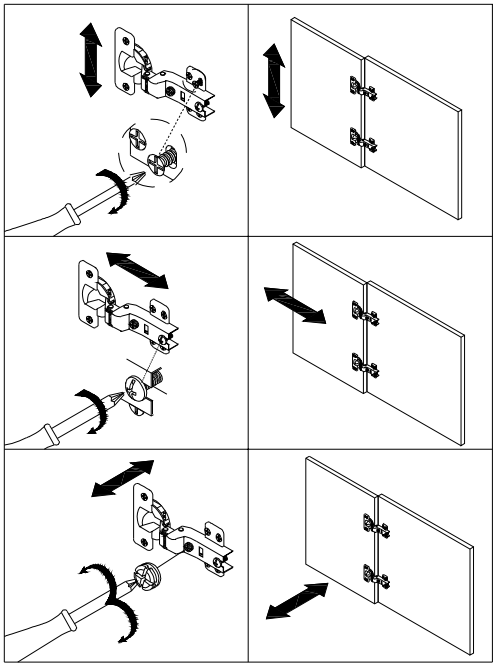

Step 26

The furniture must permanently be fixed to the wall using the porvided anti-tipping device to prevent it from tipping over.

1.Mark the drill positions on the wall with a pencil.
2.Drll a small hole on the marked positions.
3.Insert a wall anchor into the drilled hole.
4.Fix the anti-tipping strap to the wall using the provided screws.

Note:Put the TV behind to the wood trim to proevene falling off.

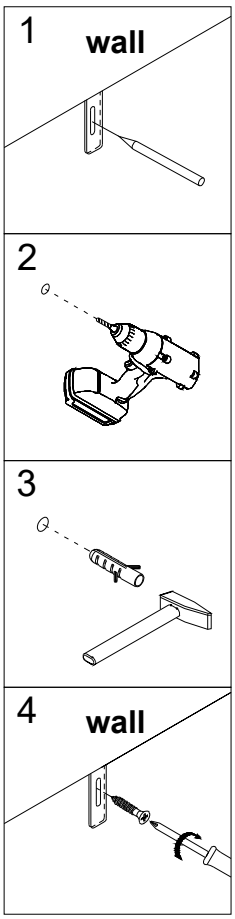

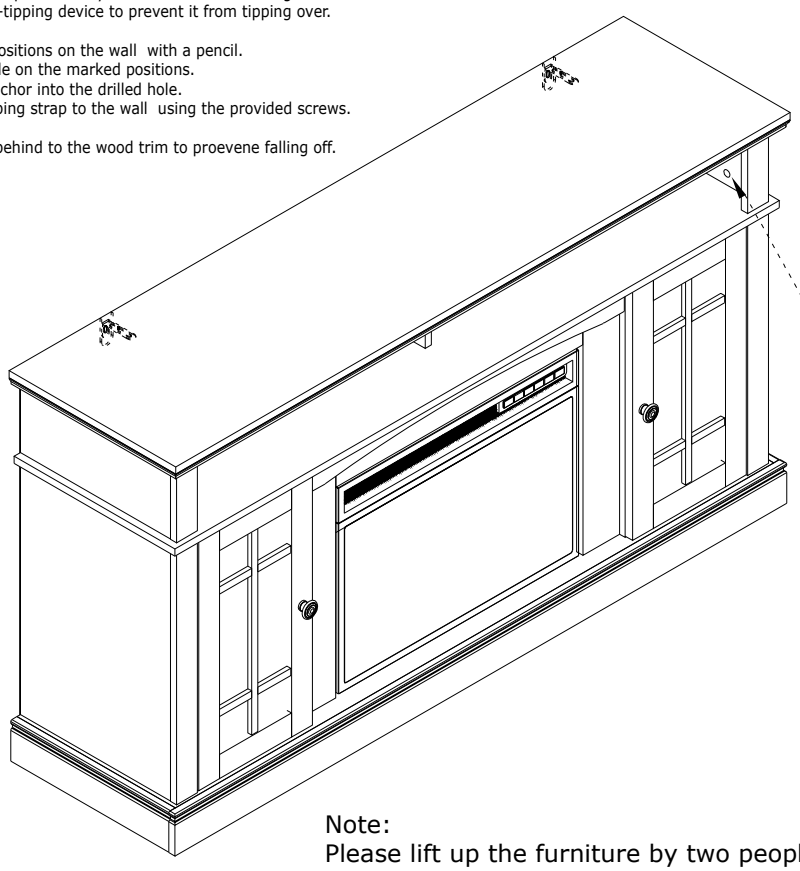

Q

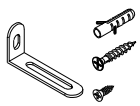

Q x 2

P

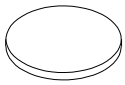

P x 46

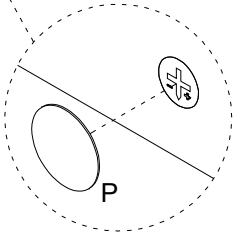

Note:
Please lift up the furniture by two people when moving is needed.
Dragging may cause the legs failure