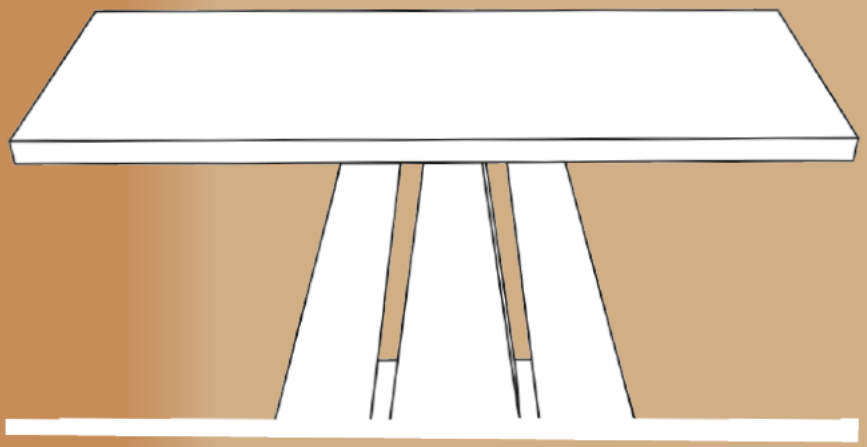

SAFETY AND
CARE ADVICE

NO POWER TOOLS

## SAFETY AND CARE ADVICE

- Only clean using a damp cloth and mild detergent, do no use bleach or abrasive cleaners.
- From time to time check that there are no loose screws on this unit
- This product should not be discarded with household waste. Take to your local authority waste disposal centre

# IMPORTANT INFORMATION

30 MINUTE BUILD

TWO PERSON

MAXIMUM CAPACITY 100Kg

PLEASE CHECK CAREFULLY AND MAKE SURE YOU HAVE ALL FITTINGS AND TOOLS LISTED BELOW BEFORE YOU START.

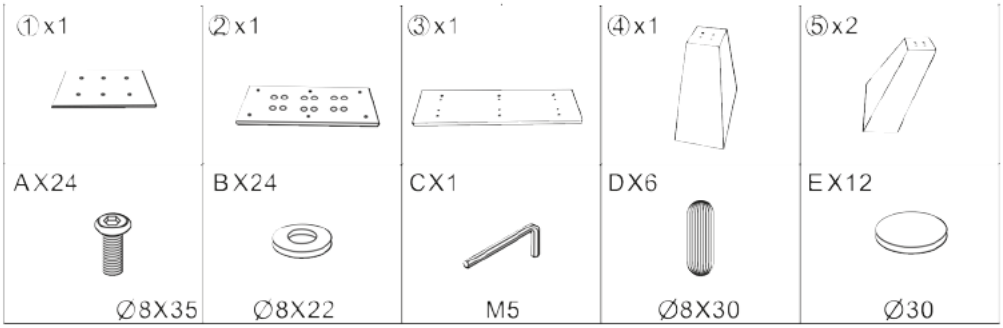


**NOTE:** The quantities above are the correct amount to complete the assembly. In some cases more fittings may be supplied than are required.

## STEP 1

Use a clear, flat, soft surface to avoid bumps or scratches.

First, take base plate [3] and add 6x wooden dowels [D].

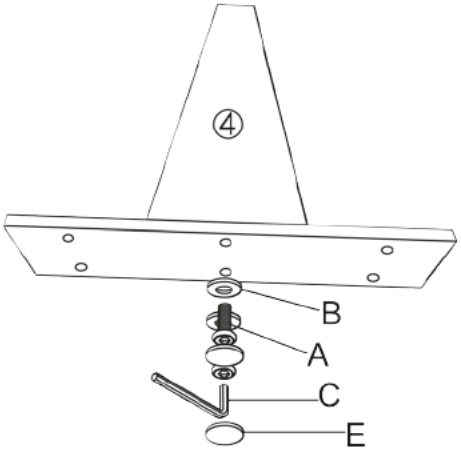


## STEP 2

Next, connect the central leg [4] to the base plate [3] using 2x washer [B] followed by screw [A]. Tighten with Allen key [C] then cover holes with 2x pads [E].

## STEP 3

Connect both the outer legs [5] to the base plate. Use 2x washer [B] followed by screw [A]. Tighten with Allen key [C] then cover holes with 2x pads [E].

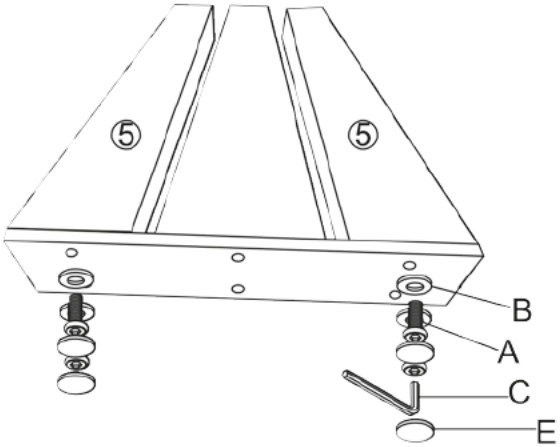

## STEP 4

Attach connecting plate [2] to the tops of the table legs. Use 4 x washers [B] followed by screws [A] per leg - 12 washers and screws total. Tighten with Allen key [C].

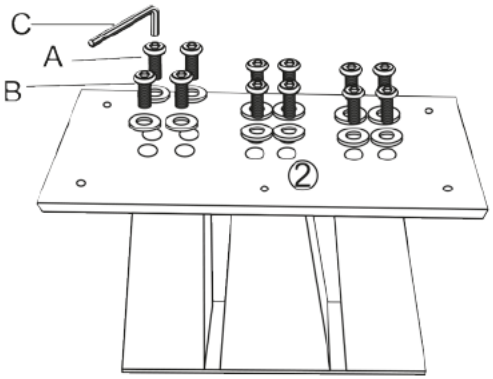


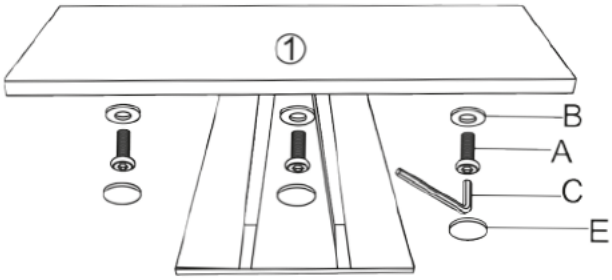


## STEP 5

Carefully place table top [1] on top of connecting plate [2]. Line up the holes and secure the connecting plate to the table top using 6 x washer [B] then screw [A] - 3 sets on each side. Tighten with Allen key [C] and cover holes with 6 x pads [E].

## STEP 6

ATTENTION: Check stability. Your table is now ready to use.

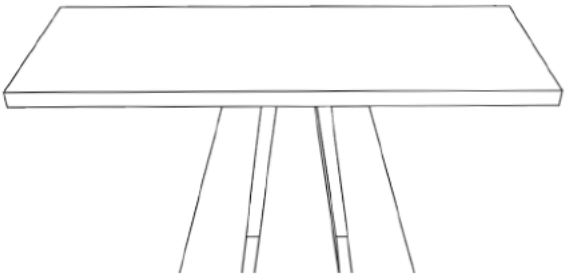

# WE LOVE INTERIORS! SHARE YOURS WITH US ON SOCIAL MEDIA

1. follow us on Instagram
2. post your interior
3. tag us to be featured

# WHAT THE GUARANTEE COVERS

**PRE-INSERTED FIXINGS**
e.g. lose metal threads

**FAULTY JOINTS**
e.g. legs bending

**EXTERNAL FIXING FAULTS**
e.g. metal discs removing from table top

**STRUCTURAL INTEGRITY**
e.g. the frame of the product