FLIP TOP STORAGE END TABLE

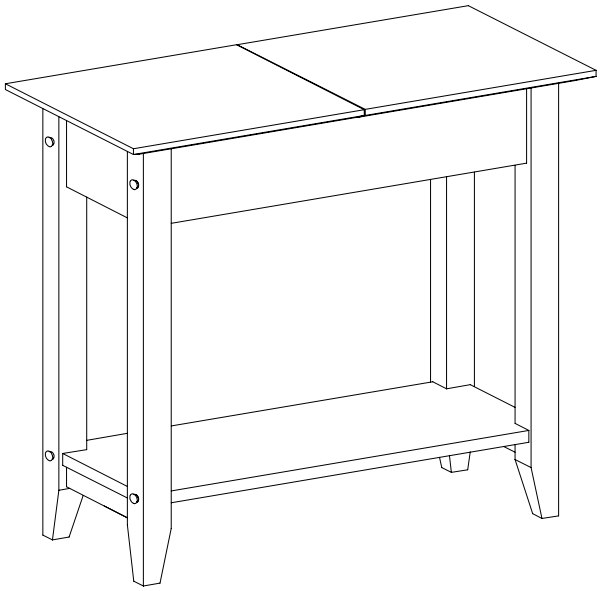

HARDWARE LIST

CODE	NAME	FIGURE	Q'TY
A	CAM LOCK (15*9mmL)		4PCS
B	CAM BOLT (6.5*35mmL)		4PCS
C	WOOD DOWEL (Φ6X30mmL)		8PCS
D	FLAT HEAD SCREW (Ø1/4*48mmL)		8PCS
E	PLUGS		8PCS
F	ALLEN WRENCH (4*21*57mmL)		1PC
G	COLOR STICK		1PC

PARTS LIST

CODE	NAME	FIGURE	Q'TY
1	TOP SHELF	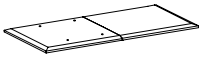	1PC
2	FRONT PANEL	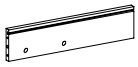	1PC
3	BACK PANEL	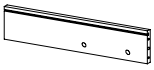	1PC
4	SIDE FRAME	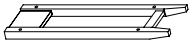	2PCS
5	BOTTOM PANEL		1PC
6	BOTTOM SHELF		1PC

Please do not return to the store

STEP 1

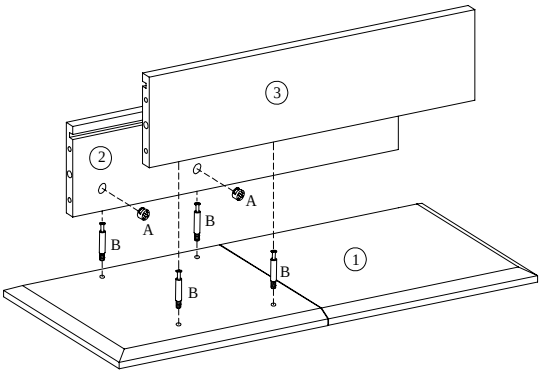

HARDWARE NEEDED

A x 4
B x 4

1.) Screw Cambolts (B) into Top Shelf (1) and place Cam Locks (A) into Front Panel (2) and Back Panel (3).
Arrow on Cam Lock Faces Outward Opening

2.) Insert Panels (2) and (3) onto Top Shelf (1) as showr and lock into position by turning Cam Locks (A) Clockwise.
Turn only 1/4 of the way for lock position

STEP 2

C x 4
D x 4
E x 2

1.) Insert Wood Dowels (C) into Panels (2) and (3) as shown.

2.) Attach Side Frame (4) to Top Shelf Assembly.

3.) Using Flat Head Screw (D), fasten Screws (D) to Top Shelf Assembly as shown.

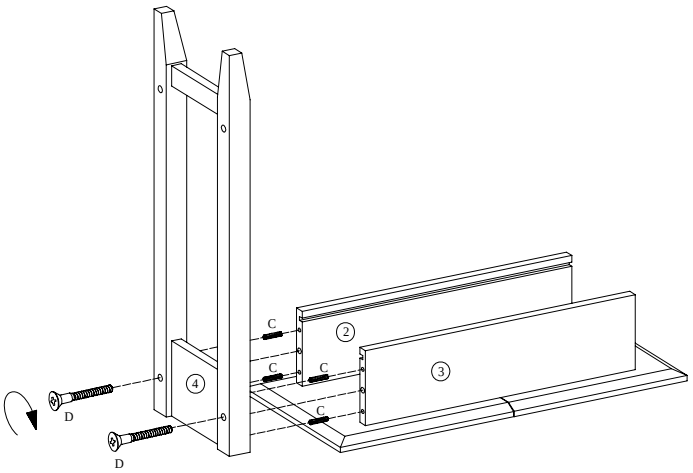

STEP 3

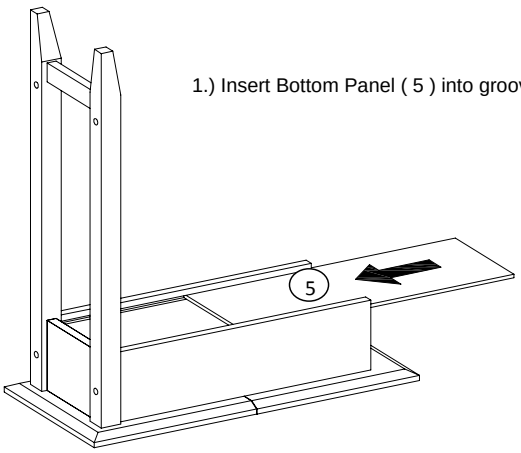

1.) Insert Bottom Panel (5) into grooves of Panels (2) and (3) and slide to insert into groove of Side Panel (4).

STEP 4

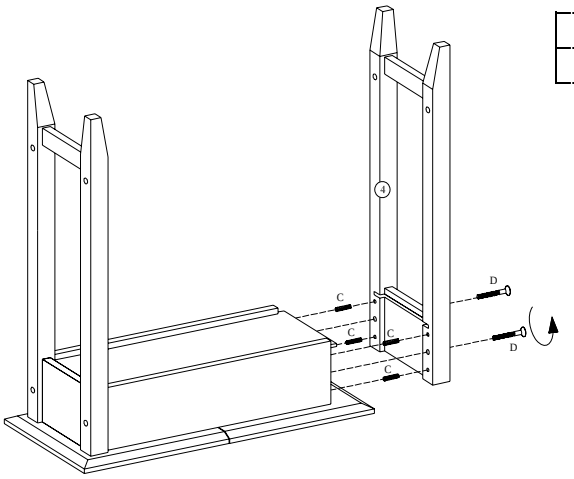

C x 4
E x 2

1.) Insert Wood Dowels (C) into Panels (2) and (3) as shown.

2.) Attach Side Frame (4) to Top Shelf Assembly.

3.) Using Flat Head Screw (D), fasten Screws (D) to Top Shelf Assembly as shown.

STEP 5

1.) Holding Bottom Shelf (6) on an angle as shown, guide to set flush against bottom bar of Side Frame (4).

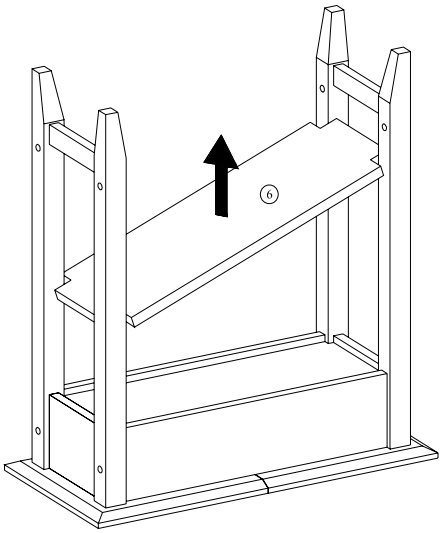

STEP 6

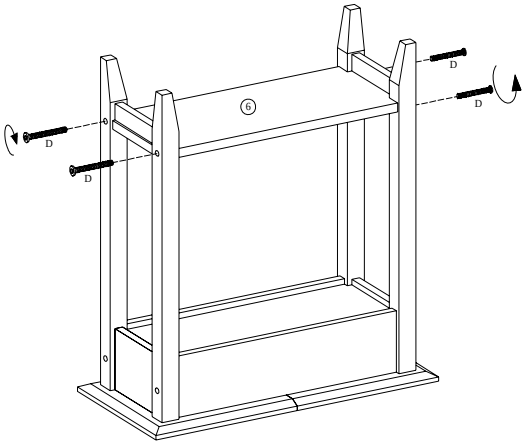

D x 4
E x 4

1.) Using flat Head Screw (D), fasten Screws (D) to secure Bottom Shelf (6) to Side Frame (4).

STEP 7

F x 8

1.) Turn Table Over

2.) Insert Plugs (E) as shown.
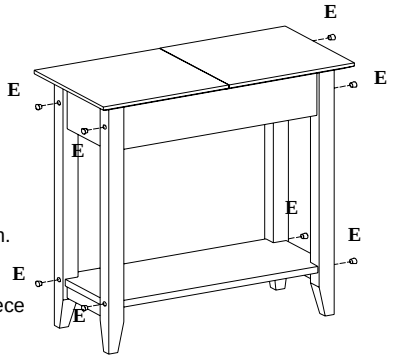
3.) Enjoy your new quality piece of furnitre for years to come!