LOS FLEXI

CRAFTING YOUR HOME STORY



LFXPA17 Pressure Assisted Two-Piece Toilet

INSTALLATION & CARE GUIDE

cs@losflexi.com www.losflexi.com (+1) 662-502-5099

PRIOR TO INSTALLATION:

GET READY TO TRANSFORM YOUR BATHROOM!
INSTALLING YOUR LOS FLEXI TOILET

Hello, DIY Champion!
Before you embark on the exciting journey of installing your sleek Los Flexi toilet, let's ensure you're fully equipped to tackle this task with finesse. We're here to guide you through this process with clear and user-friendly instructions, making it as easy as a warm handshake.

Before You Dive In:

- Take a moment to peruse these instructions, ensuring you have the right tools and materials on hand. This step is your secret weapon to success.
- Give your new Los Flexi toilet a quick once-over to make sure it's in perfect condition after its voyage to your home. We want it to shine as brilliantly as it's designed to.
- Show your commitment to following the plumbing and construction regulations in your area. We're all about keeping things on the up-and-up.
- Bid farewell to your old toilet. Trust us; this upgrade will redefine your bathroom experience!

Here's a valuable tip: Ensure that your water supply pressure meets or exceeds a minimum of 35 PSI (2.5 kg/cm^2). This is the power your new toilet needs to deliver peak performance. No pressure, no performance, right?

- Give that mounting surface a little love – cleanliness and levelness are the keys to a comfortable seat for your toilet.

You're all set, bathroom virtuoso! Get ready to transform your bathroom into the talk of the town. Remember, we're just a message away if you require any assistance. Now, go ahead and install that Los Flexi toilet like the superstar you are!

Toilet Regards,
The Los Flexi Team

HIGH-RESOLUTION DIGITAL MANUAL

TWO-PIECE TOILET INSTALLATION VIDEO

TOOLS AND MATERIALS REQUIRED
(Not Supplied)

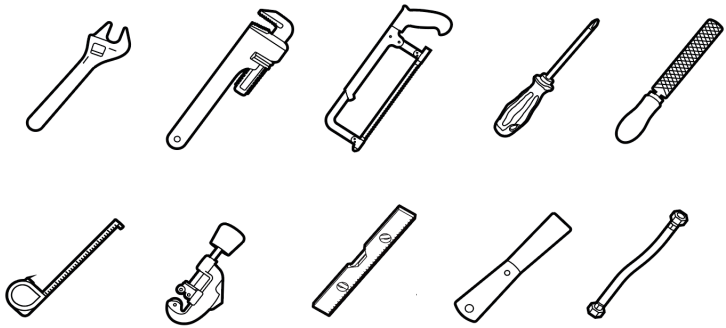

1. 10" (254mm) adjustable wrench
2. 12" (305mm) pipe wrench
3. Hacksaw
4. Screwdriver
5. Metal file (file cut)
6. Tape measure
7. Tubing cutter
8. Level
9. Putty knife
10. Water supply line

PACKAGE INCLUDED:

- Toilet Bowl
- Pressure Assisted Tank
- Toilet Seat
- Installation Kit

Note:
All diagrams are for reference only.
Please refer to the actual product received.

PRESSURE ASSISTED FLUSHING SYSTEM DIAGRAM



Quick heads-up: If your current toilet doesn't sport a supply shut-off valve beneath the tank, make sure to pop one in before you dive into setting up your shiny new throne.

START INSTALLATION

1. Remove Old Toilet

- Turn off the water supply.
- Flush the toilet to empty the tank. Remove any water left in the tank or bowl.
- Disconnect the supply line from the tank.
- Remove decorative caps. Unscrew nuts that attach the toilet to the floor. Remove toilet.
- Make sure the water supply valve is shut off before installation.
- Remove old toilet bolts from toilet flange. Clean any old wax, putty, etc. from base area.

2. Install or relocate the water supply and outlet as necessary to conform to the rough-in dimensions of your new toilet. Ensure that the shut-off valve is greater than 7 1/2" from the center of the drain to the center of the shut-off valve on either side.

NOTE: This is a 280mm(11") rough-in toilet from finished wall to center of the drain, which is compatible with 12" rough-in installation. Baseboard thickness may reduce rough-in dimension.

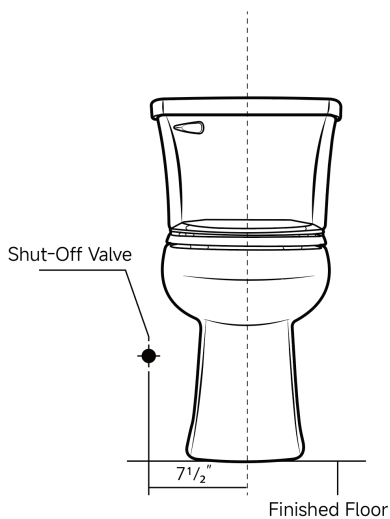

3. If replacing a toilet, scrape off and remove all wax residue with a cleaner. Toilet horn must be clean and dry.



4. Insert new T-bolts.

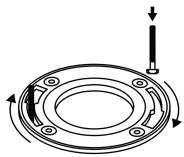

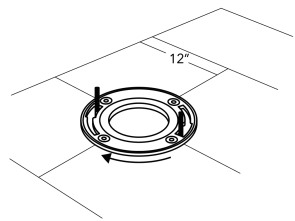

5. Take off the washers and nut (①②③). Set the tank on the bowl, align the gasket with the hole, and tighten the nuts and washers evenly.

Note:
4 screw assemblies are included.
Only 3 are required for installation.

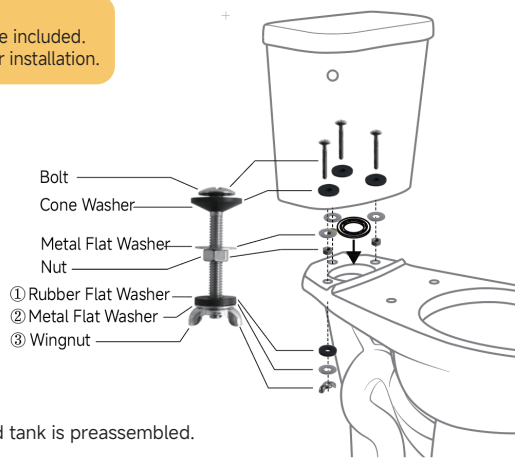

*The pressure-assisted tank is preassembled.

6. Install the flush lever.

NOTE: Supposed the tank has been pre-assembled through previous 2 steps, please continue with ❸.

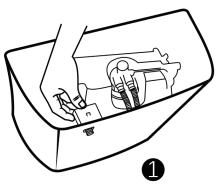

Insert the actuator hose
(Refer to Page 4)
through the front hole.

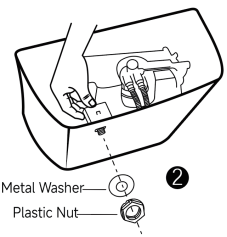

Place the metal washer and plastic nut, then tighten the nut.

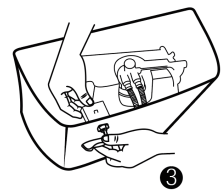

Insert the lever arm and adjust until it perfectly fits.

7. Place the wax seal.

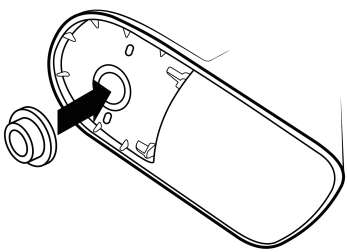

8. Apply weight evenly.

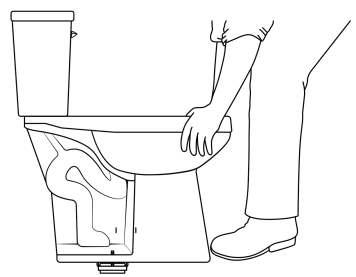

9. Install floor mounting kit as shown below.
DO NOT OVERTIGHTEN!

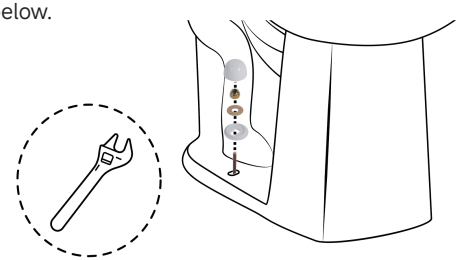

10. Cut excess from the bolt and affix bolt cap.

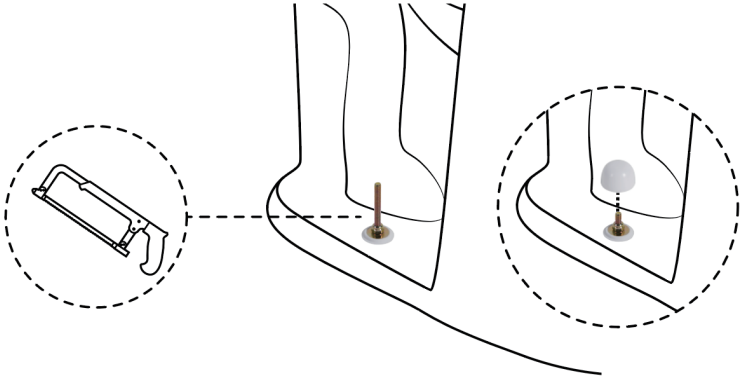

11. Connect the water supply line to the toilet.

❶ Remove the pre-installed adapter.

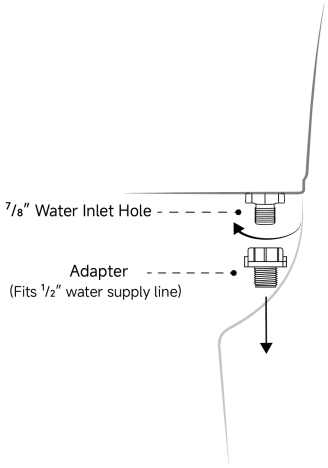

❷ Connect the 7/8" ballcock end of the supply line to the water inlet.

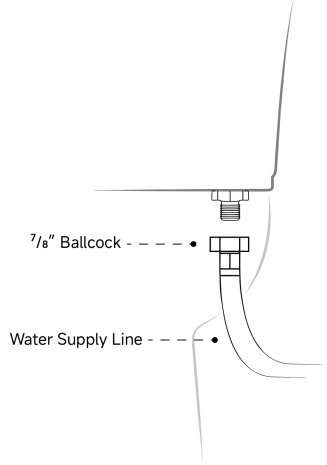

12. Install the seat per the seat instructions below. Use the supplied components. After installation, flush several times and check for leaks.

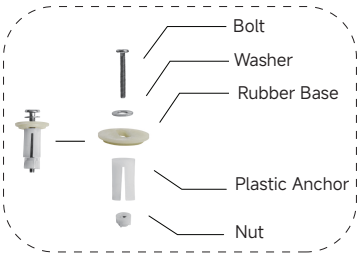

Pre-assembled Fitting

❶



Open the hinge covers.

❷

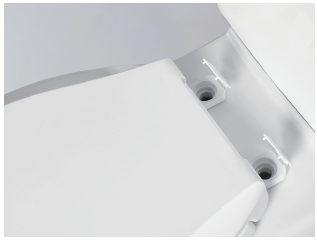

Place the seat on the bowl and align it with the mounting holes.

❸

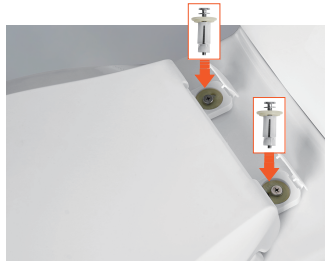

Insert the assembled fittings and adjust their positions.

*Make sure the seat is properly aligned with the bowl.

❹



Secure the screws with a screwdriver.

❺

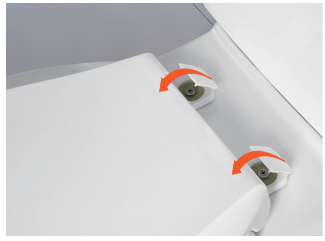

Snap on the hinge covers to complete installation.

13. After installation, turn on the water supply and wait for 1 minute to bring the pressure system to its operating pressure. Inspect all connections for leaks. Flush and repressurize the toilet 3 times to stabilize the system.

TOILET BODY: ROUTINE MAINTENANCE

- Do not use in-tank cleaners in your toilet. Products containing chlorine can seriously damage fittings in the tank. This can cause leakage and damage.
- Do not use cement while installing toilet.
- Wipe surfaces clean and rinse completely with water immediately after applying cleaner. Rinse and dry any overspray that lands on nearby surfaces.
- Do not allow cleaners to soak on surfaces.
- Use soft, dampened sponge or cloth. Never use abrasive materials such as hard-bristle brushes or scouring pads to clean surfaces. Use of any abrasive materials may damage the porcelain glaze.
- If you live in a hard water area, make certain that the rim-jet holes underneath the rim of the toilet bowl are kept clean to ensure proper flushing.
- Take care not to strike vitreous china with force to prevent damage and leaks.
- Do not use the toilet with water below 0°C (32.0°F).

PRESSURE SYSTEM: INSPECTION & CARE

- Regularly inspect all connections between the pressure tank, water inlets, and flush valve to ensure no leaks or loose fittings.
- Do not disassemble the pressure vessel. The internal pressure chamber operates under high pressure and should not be opened or serviced by non-professionals. If there is weaker flushing power or reduced air noise, the air charge or internal diaphragm may be failing. Contact us or a qualified technician for assistance.
- Pressure-assisted toilets are designed to use air pressure for flushing. Avoid flushing multiple times in quick succession to prevent overloading the system.
- Replace worn-out rubber gaskets and O-rings regularly to prevent water flushing performance from being affected by air pressure leakage.
- If the toilet will be unused for a long period, shut off the water supply and drain the tank to relieve static pressure and extend the lifespan of the components.

WINTERIZING

- Shut off the water supply and flush the toilet to remove most of the water from the bowl and tank.
- Press and hold the actuator for about 1 minute to fully drain water from the vessel.
- Disconnect the water supply line.
- Remove the supply shank and drain any remaining water from the tank.
- Press the actuator again and pull it upward to allow air into the pressure vessel.
- Add antifreeze to the water in the toilet bowl to prevent freezing.
- When restarting, reconnect the water supply and follow the Step 12.

TROUBLESHOOTING GUIDE

When serving or replacing any components, be sure the water supply is shut off and the toilet is flushed.

Issues	Possible Cause	Suggested Solutions
1. No flush.	A. Water supply is shut off. B. Trip lever is loose. C. Screen is clogged. D. Obstruction is within water inlets.	A. Fully open the shut-off valve. B. Tighten nut. C. Clean the screen. D. Replace inlet components.
2. Poor flush.	A. Water supply is partially closed. B. Bowl rim or jet holes are clogged. C. Partial clog in drain or trapway. D. Tank does not fully refill.	A. Fully open valve to restore. B. Clean under bowl rim. C. Use a plunger or toilet auger to remove obstructions. D. The internal components may be failing (contact us or plumber for assistance).
3. Others: bowl water keeps running, tank fill water will not stops, slow refill, etc.	A. Pressure regulator is not working correctly. B. Fill valve is aging. C. Supply line is blocked or leaking.	A. Replace the lower supply group. B. Clean the screen or replace the valve. C. Check supply hose and make sure all connections are tight enough and leak-free.

***NOTE:**

Do not open or disassemble the pressure vessel. It operates under high pressure. If there is reduced flushing noise, weaker force, or delay activation and discharge, the pressure vessel may have lost air pressure. Please contact a qualified plumber for inspection or our support team for further information.

LIMITED WARRANTY COVERAGE

TWO YEAR LIMITED WARRANTY

Los Flexi products are crafted with superior materials and impeccable workmanship, offering our customers reliable and long-lasting products. If defects in materials or craftsmanship are detected under standard use within the first two years of installation, Los Flexi will either supply replacement parts at no charge or, if deemed necessary, replace the product or its parts. This warranty is exclusive to the original purchaser, and proof of purchase is mandatory for any claim.

This Warranty Will Be Voided If:

- The product's installation did not follow our recommendations.
- The product was relocated from its initial installation site.
- The product underwent any modifications from its original condition.
- The product suffered from neglect, misuse, chemical overuse, accidents, or any other damages.

Los Flexi does not imply that our products adhere to local building or plumbing codes. Consumers must ascertain local code compliance before and during installation. This warranty is strictly for the original purchaser and first consumer.

Los Flexi won't be held responsible for any consequential damages linked to the product's installation, replacement, return, or usage. This includes, but is not limited to, freight charges, labor, downtime, home damages, and other associated costs (e.g., professional services, investigations, audits, legal fees).

This Los Flexi warranty clearly delineates our liability. Items not specified in this warranty fall outside Los Flexi's responsibility. In states with variations concerning implied warranties, our compliance is ensured.

For any queries or concerns, feel free to reach out to us at

Email: cs@losflexi.com
Phone: (+1) 662-502-5099
Site: www.losflexi.com