ASSEMBLY INSTRUCTION

DEAR CUSTOMER

Thank you for purchasing our product. Please read this assembly instruction carefully before assemble and use, and keep it for future reference.

Tips:

1.Please check whether the outer packaging is intact before opening to avoid damage during transportation.

2.Assemble this product on a flat and clean surface to avoid scratching. It is recommended for one or two people to assemble.

3.After unpacking, please confirm in time all the parts and hardware are included. Please do not discard any packaging, if for any reason you need to return this product, it must be returned in its original packaging.

4.If you have any questions about the products

5.Please keep small parts out of reach of children or pets to prevent them from

swallowing.

6.Please read the installation steps in the Instruction carefully and follow the steps in the Instruction to assemble.

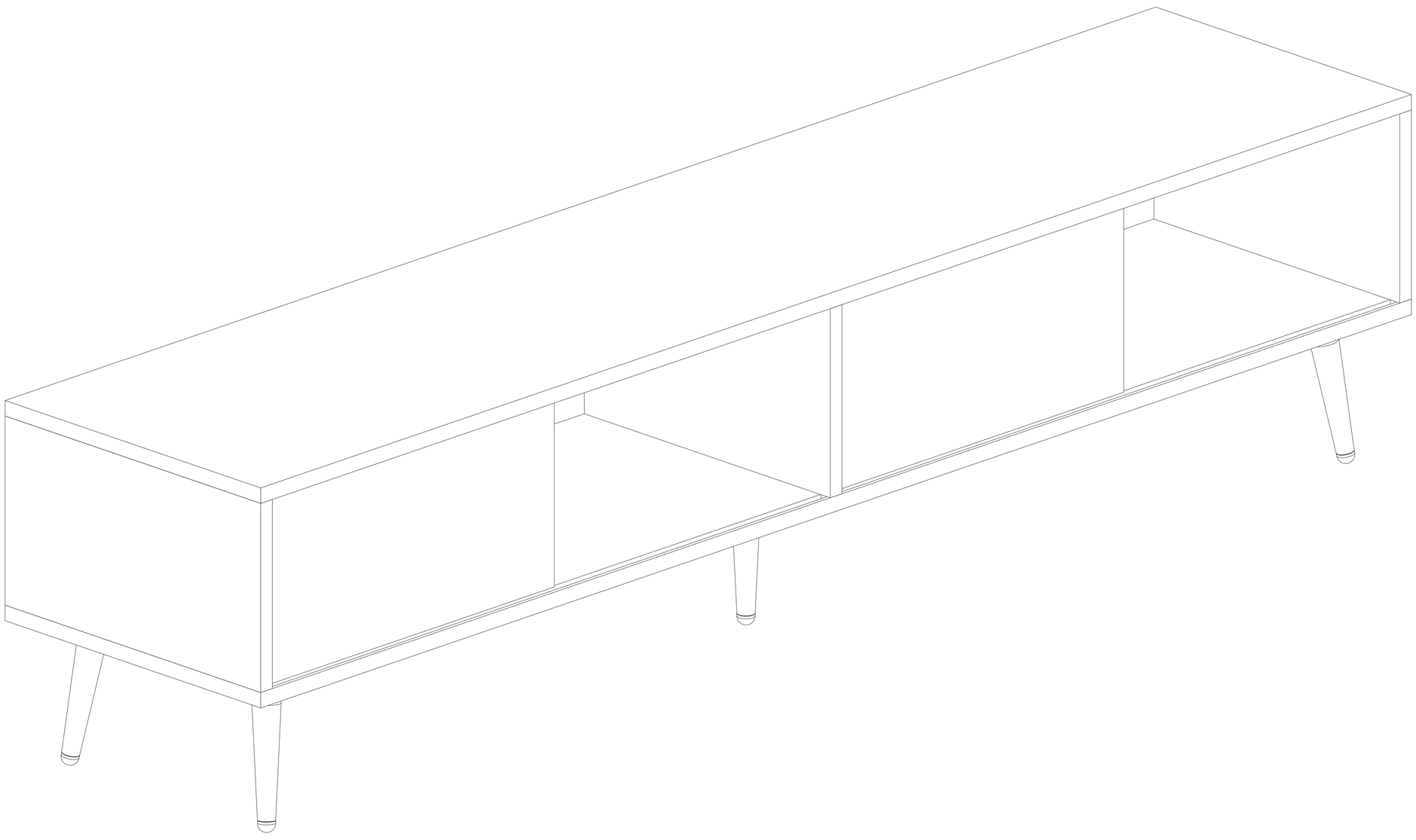

Unpacking Step

First layer

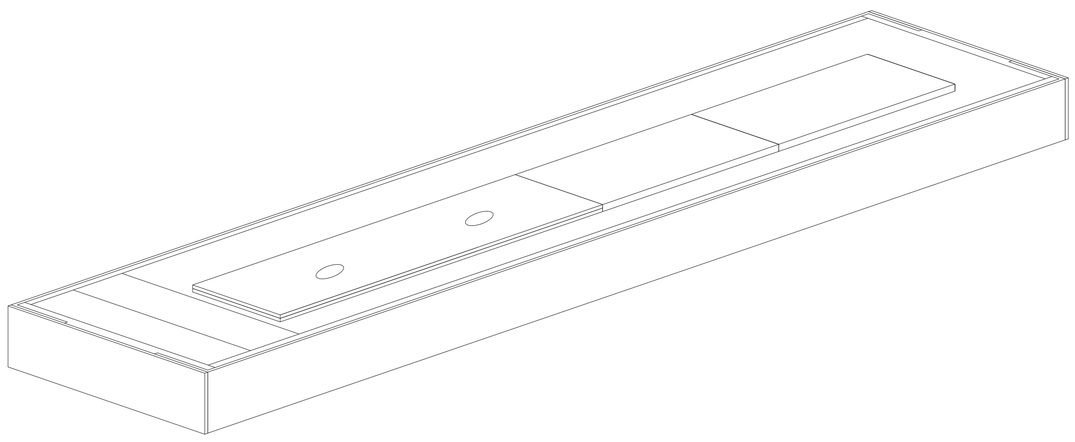

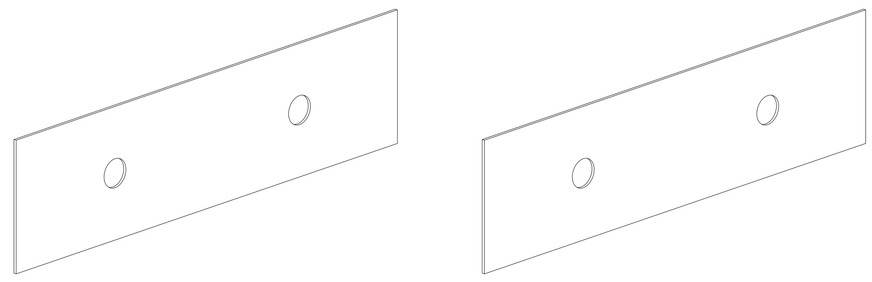

5 Back panel

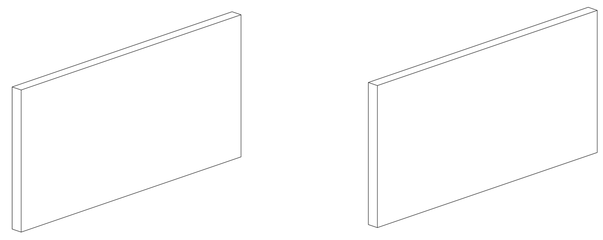

7 Push door panel

Second layer

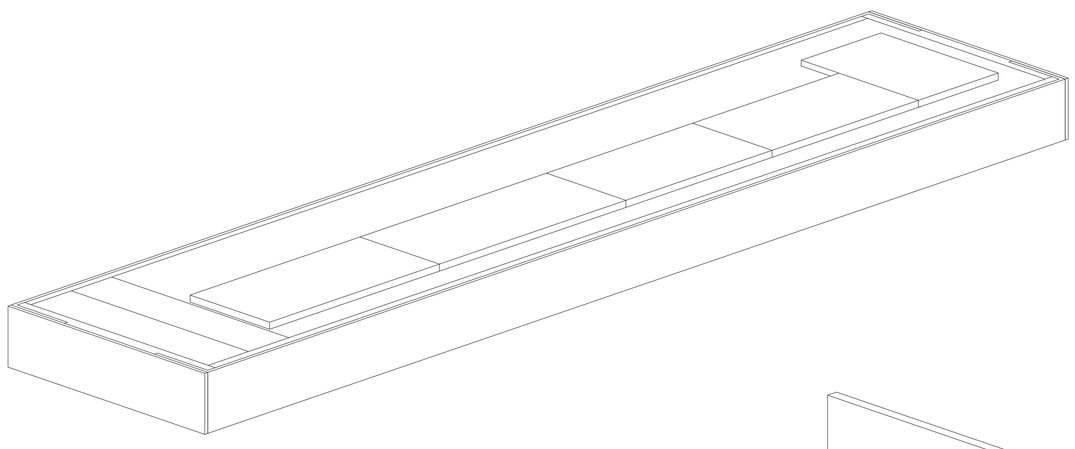

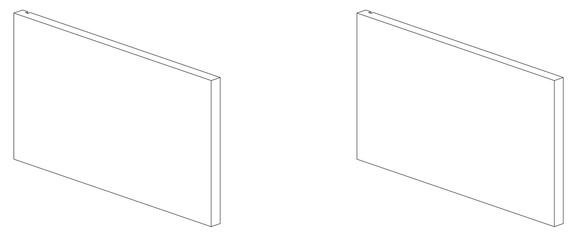

2 End panel

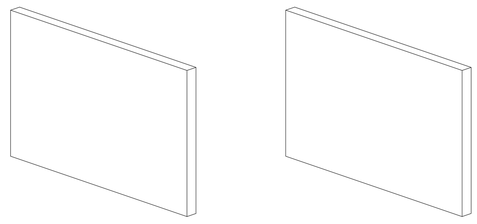

3 Partition panel

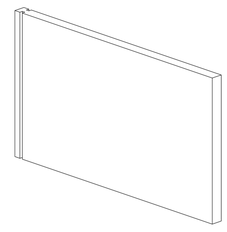

4 Partition panel

Third layer

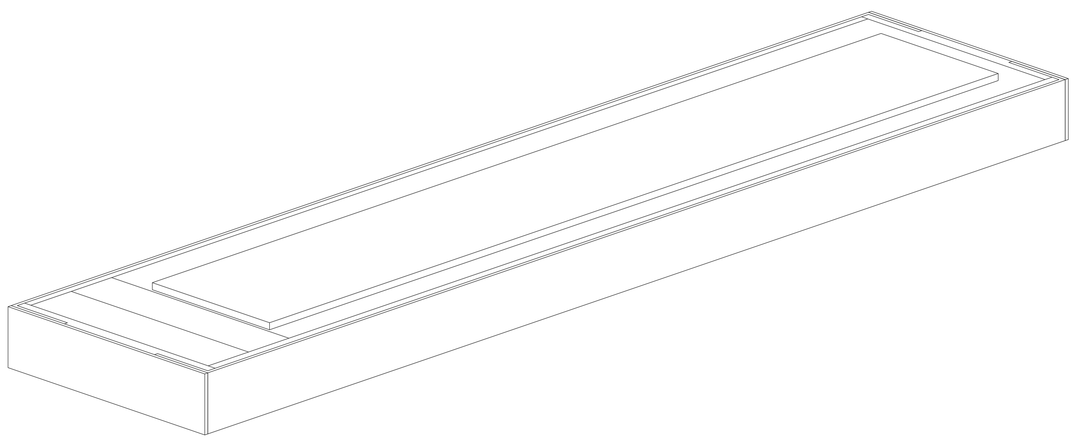

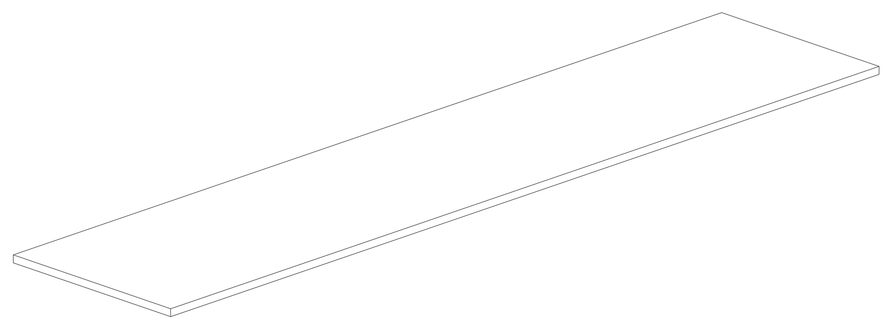

6 Top panel

Unpacking Step

Fourth layer

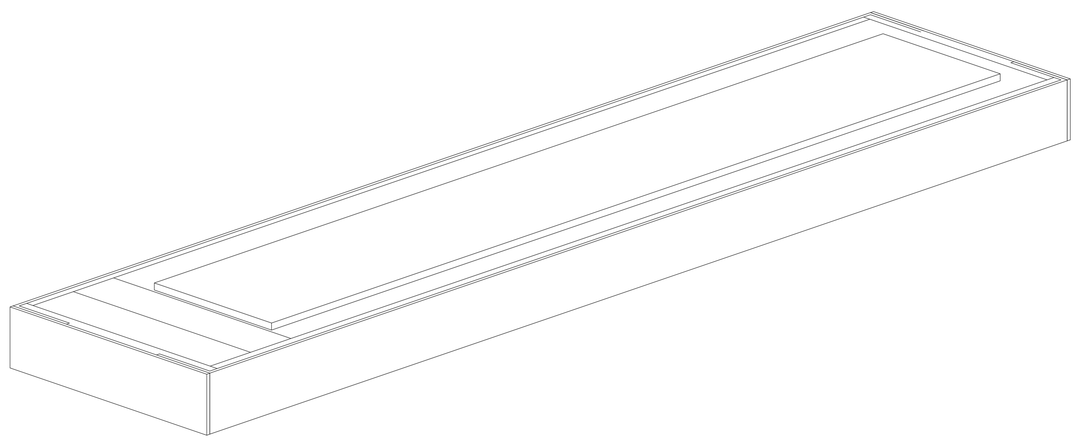

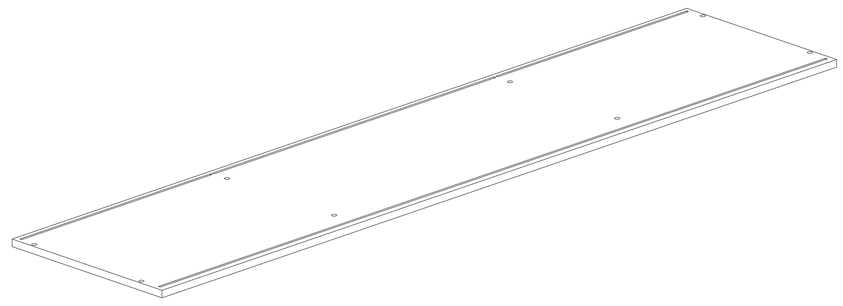

① Bottom panel

Fifth layer

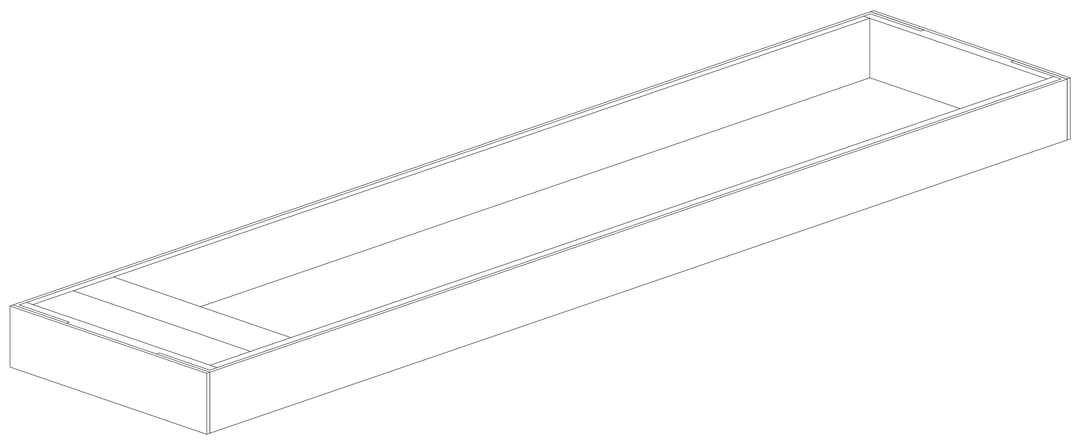

Ⓐ Bolt

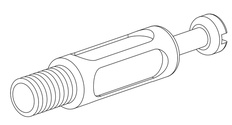

x20

Ⓑ Adjustor

x20

Ⓒ Screw

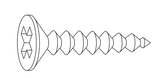

x24

Ⓓ Leg

x4

Ⓔ Leg

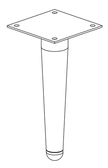

x2

Ⓕ Pulley

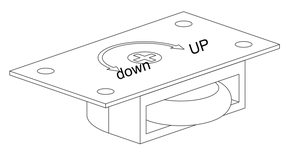

x4

Ⓖ Latch

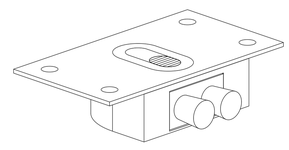

x4

Ⓗ Screw

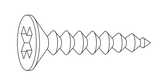

x32

Ⓙ Slide

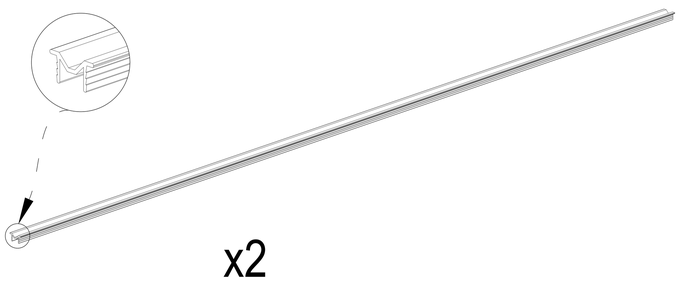

x2

STEP 1

Screw the bolts (A) on the bottom panel (1) and the top panel (6) using the screwdriver.

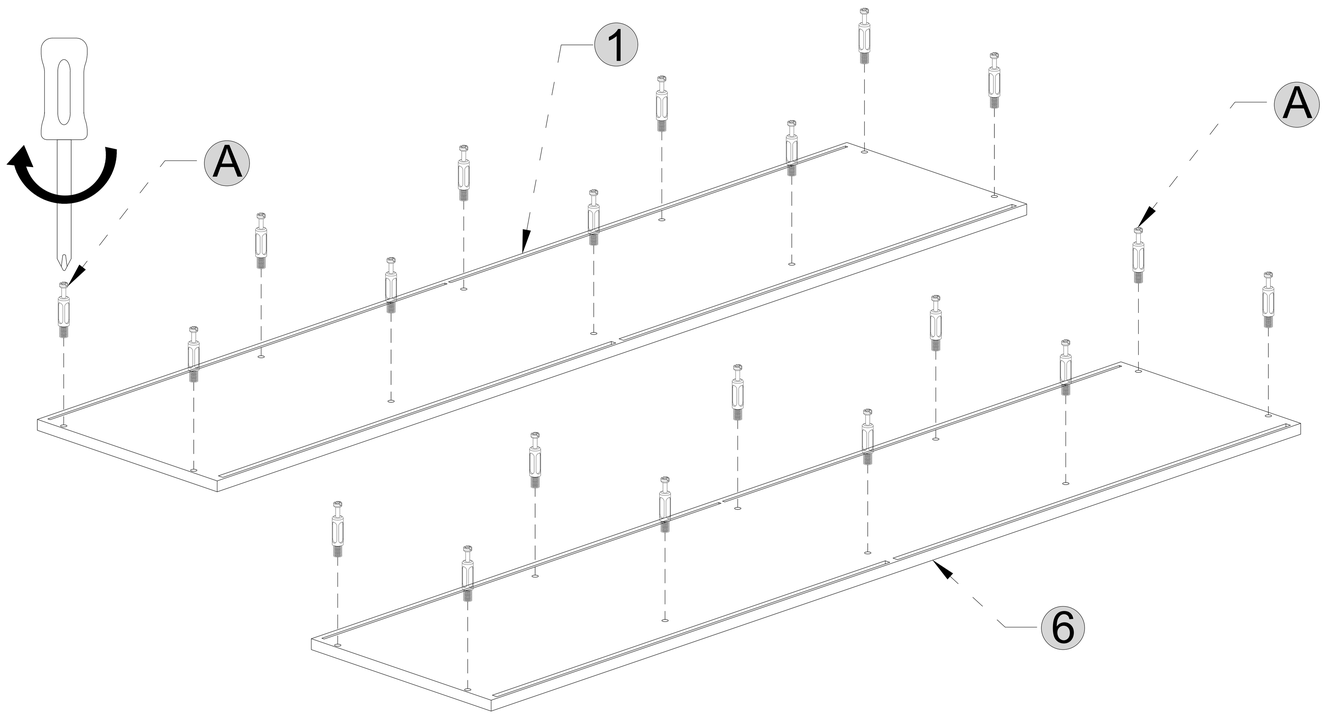

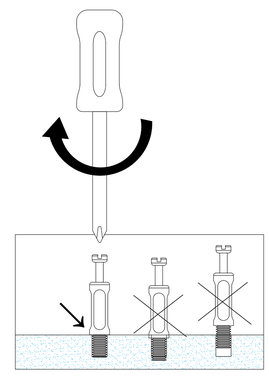

Attention: Tighten the bolt evenly.
Cannot sink or hang in the air.

A x20

STEP 2

Insert the bolts (A) of the top panel (6) into the side holes of end panels (2) and partition panels (3) / (4) place the adjusters (B) into the holes and tighten them

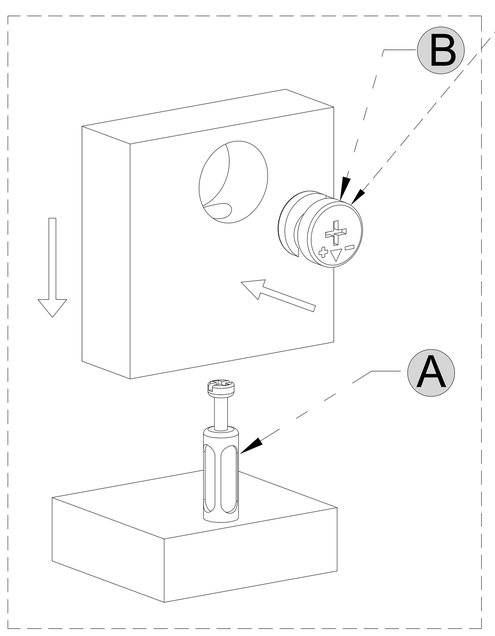

first place the adjuster into the hole,its opening toward to the bolt ,and then tighten it.

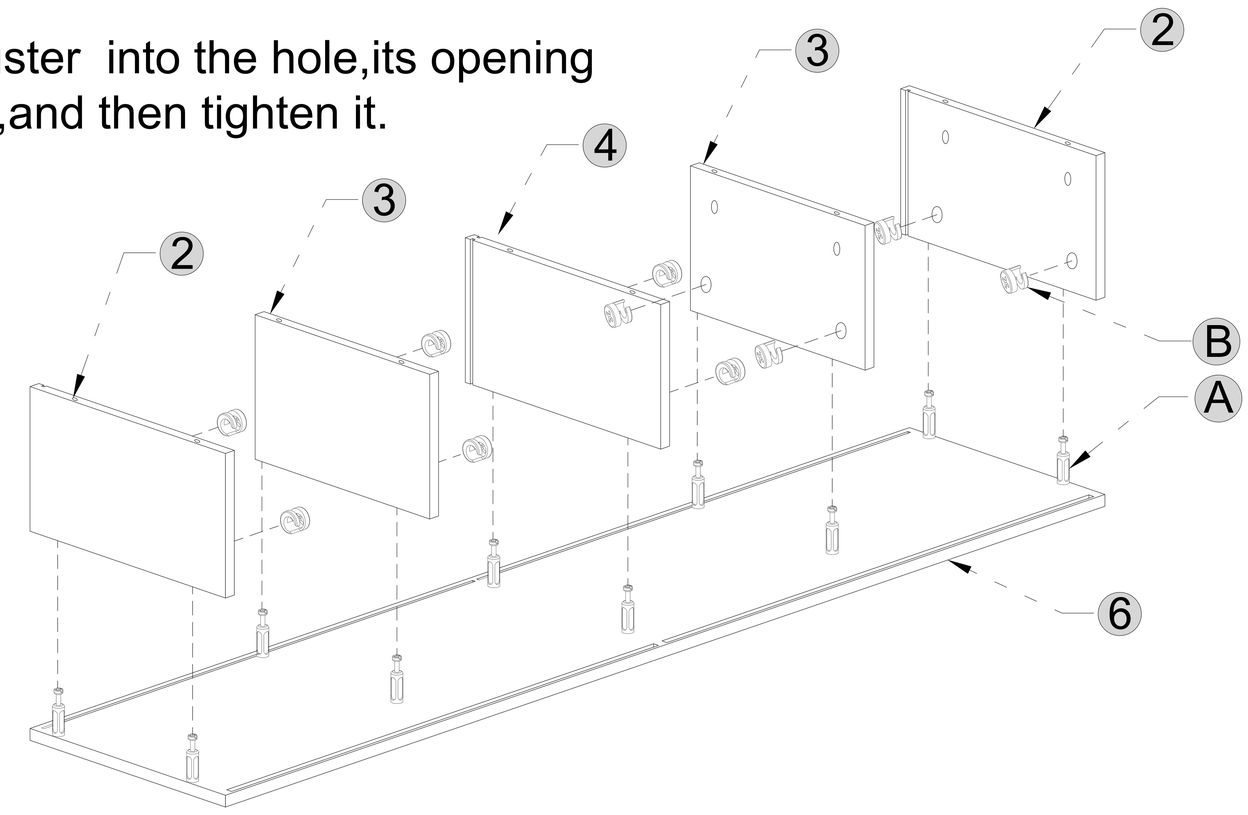

B x10

STEP 3

Insert the back panels (5) into the groove of end panels (2) , partition panels (4)

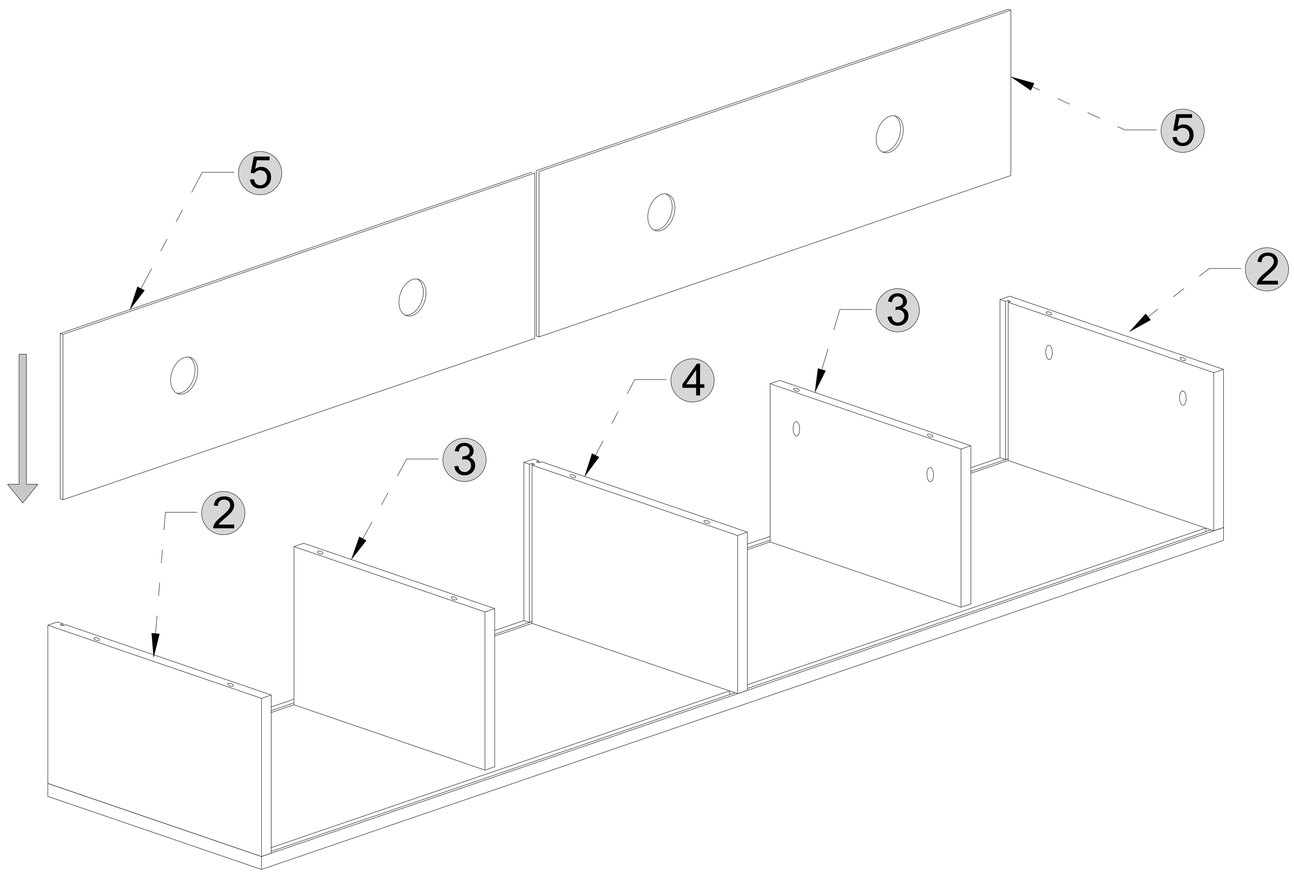

STEP 4

Insert the bolts (A) of the bottom panel (1) into the side holes of end panels (2) and partition panels (3)/(4). place the adjusters (B) into the holes and tighten them

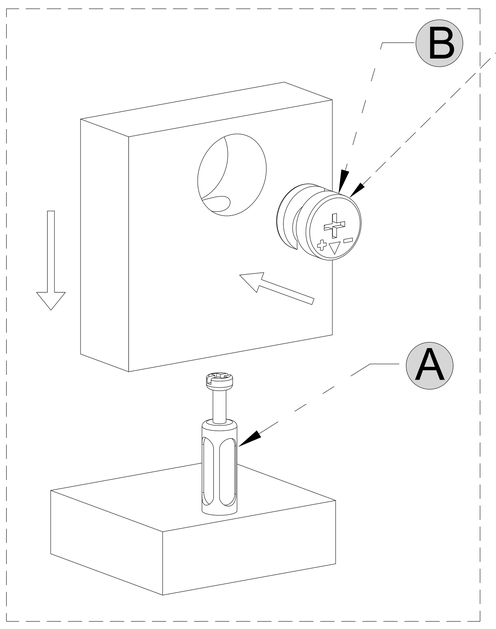

first place the adjuster into the hole,its opening toward to the bolt ,and then tighten it.

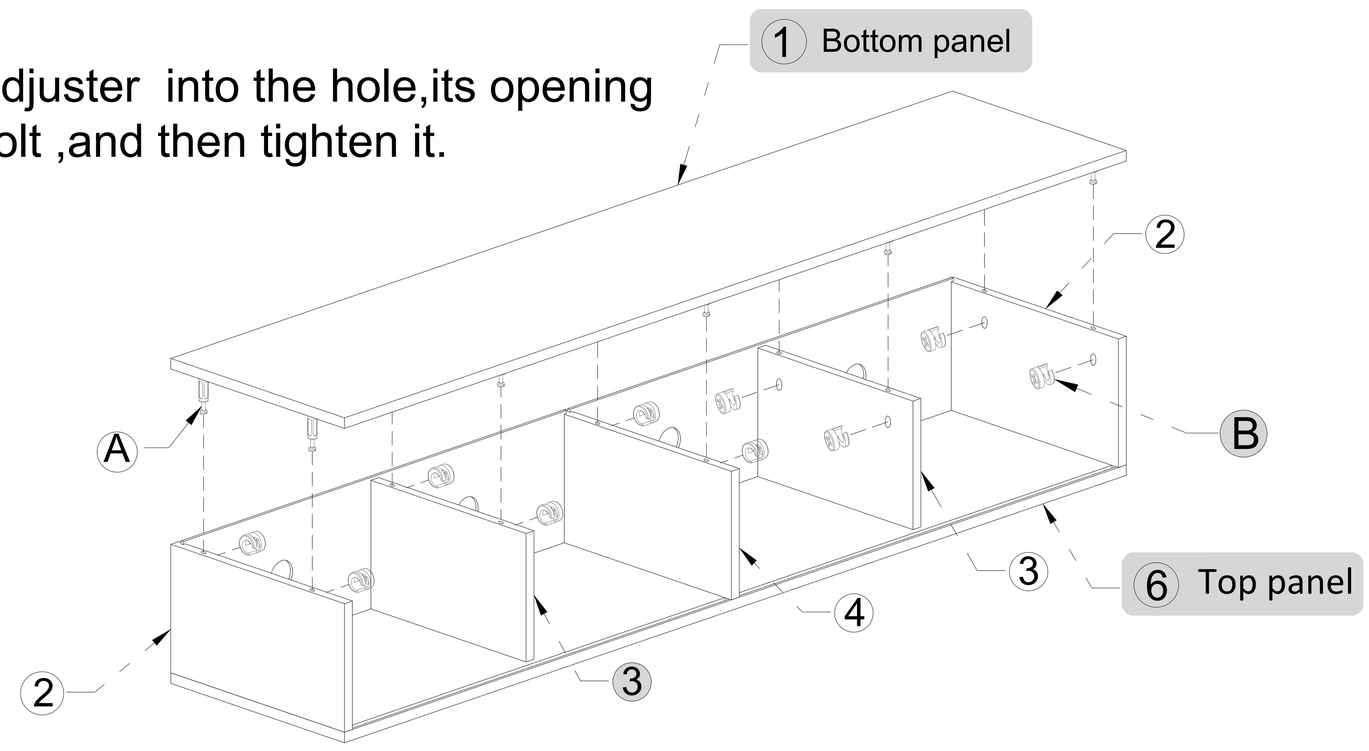

B		x10

STEP 5

Screw the legs (D) and (E) on the bottom panel (1) using the screws (C) and the screwdriver.

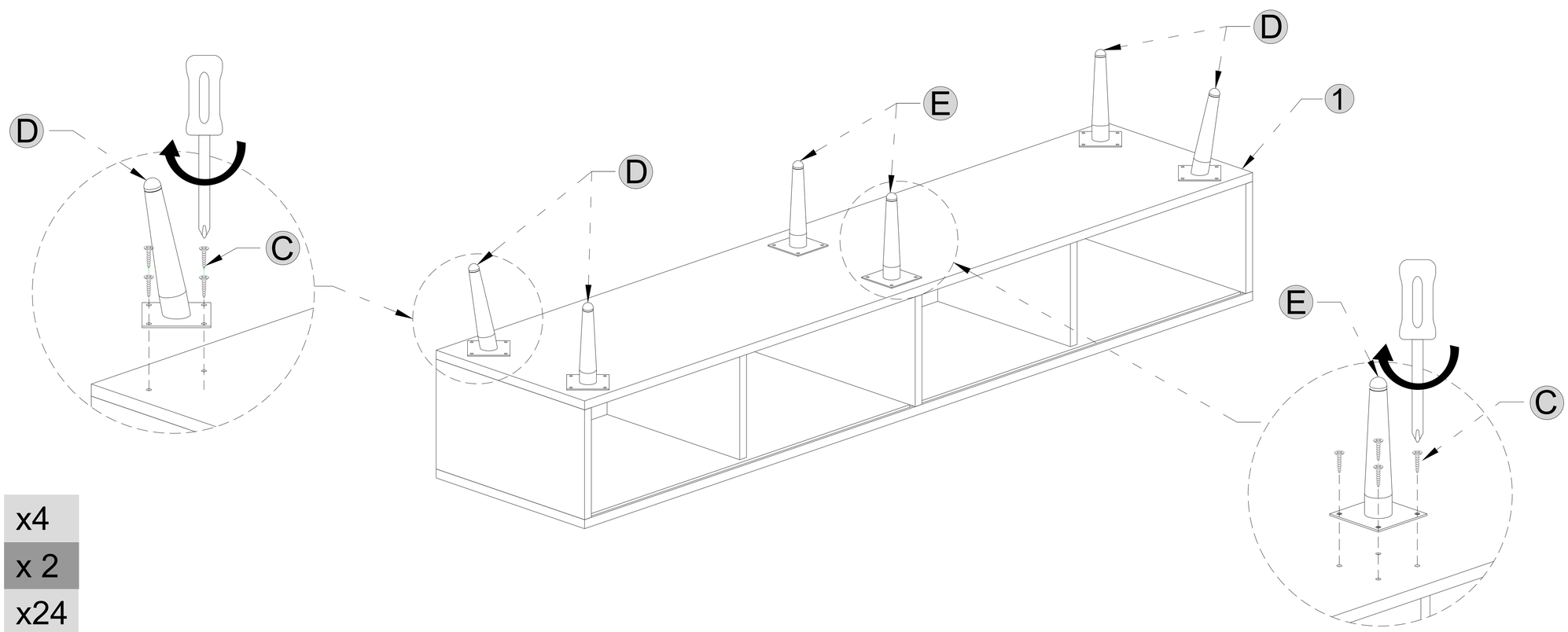

D		x4
E		x 2
C		x24

STEP 6

Screw the pulleys (F) and latches (G) onto the push door panels (7) using the screwdriver and the screws (H)

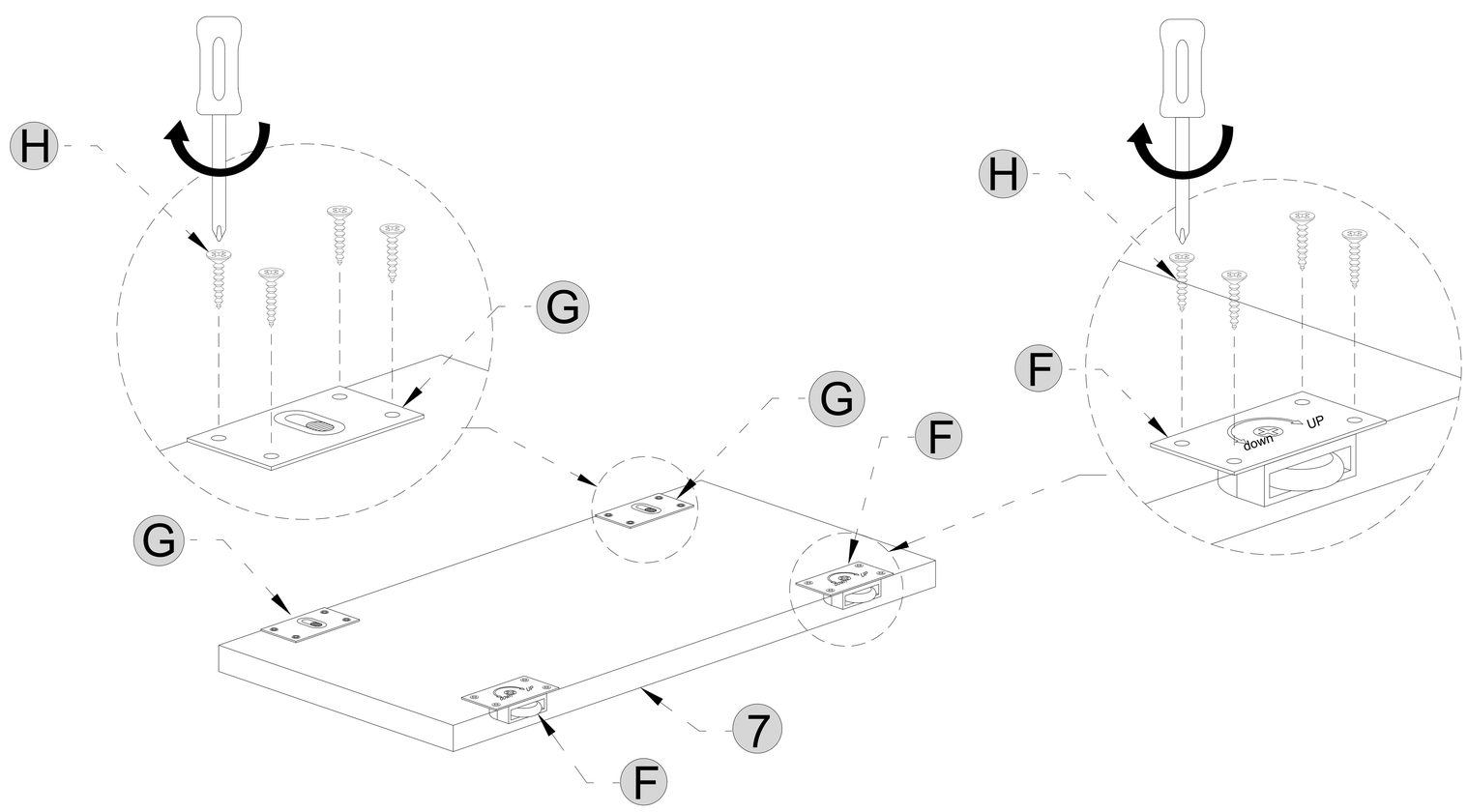

F		x 4
G		x 4
H		x32

STEP 7 Place slides (J) into the groove of the bottom panel (1)

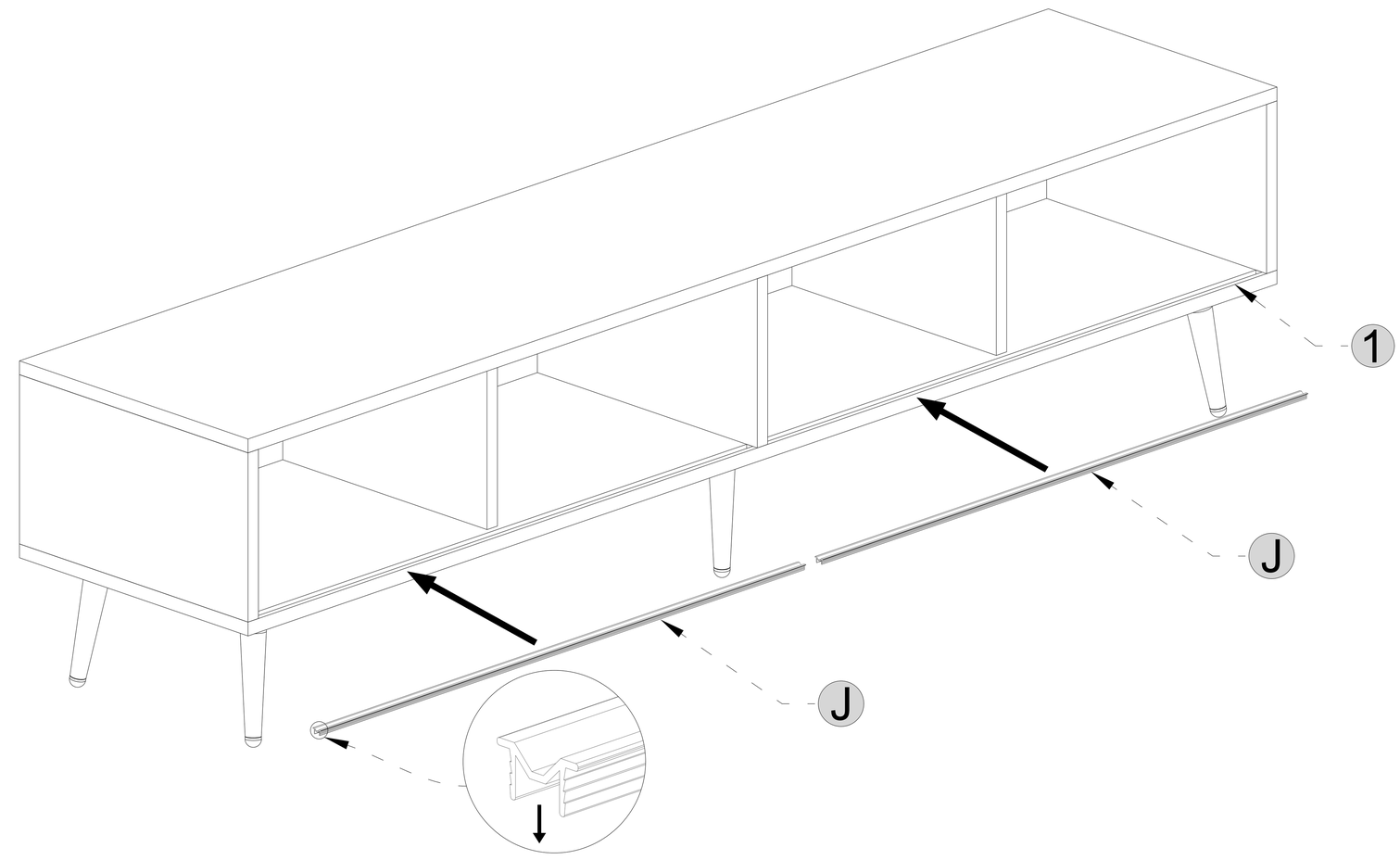

STEP 8 Install two push door panels (7) on the TV cabinet

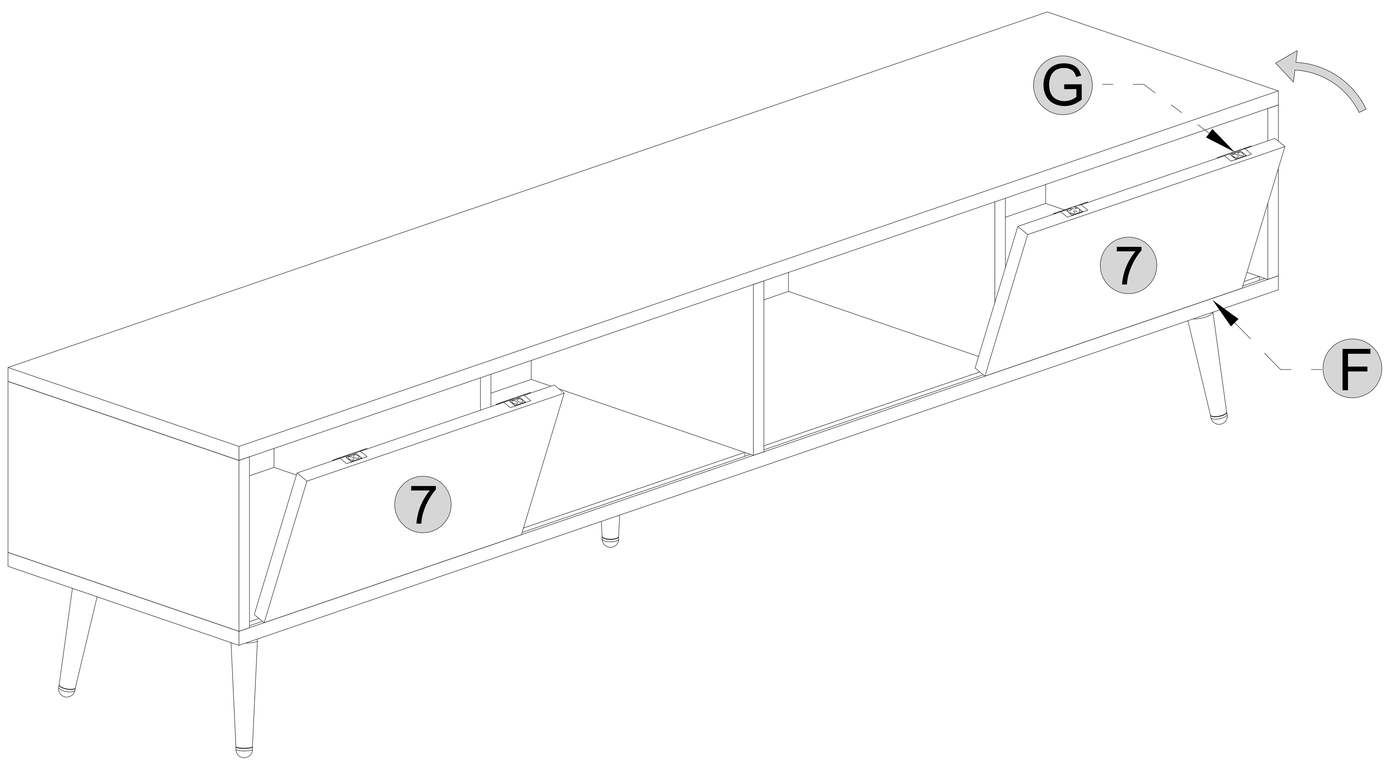

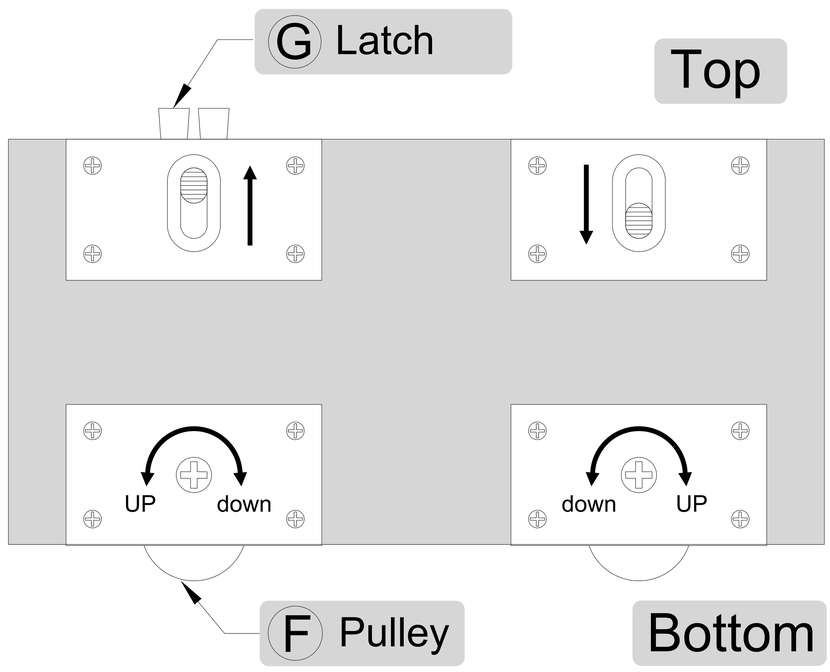

7 The back of the push door panel

Assembly completed!

Please enjoy the TV cabinet