INSTALLATION
Product Manual

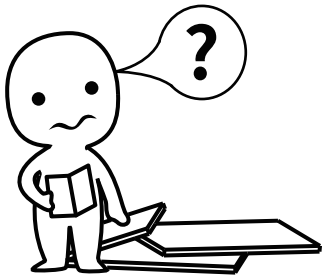

IMPORTANT INFORMATION!

Please read the entire manual before starting to assemble and/or using this product. Follow the manual thoroughly and keep it for further reference.

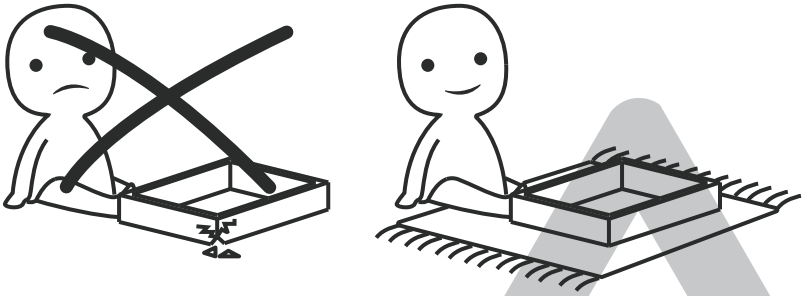

AVOID SCRATCHES!

In order to avoid scratching this furnuture should be assembled on a soft layer-could be a rug.

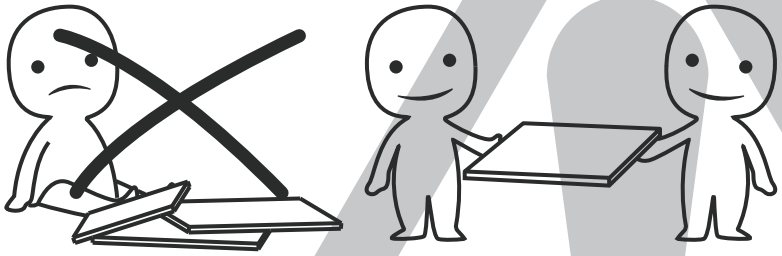

IMPROVE EFFICIENCY !

Try to find a partner to install with you, which can speed up the installation efficiency and shorten the time.

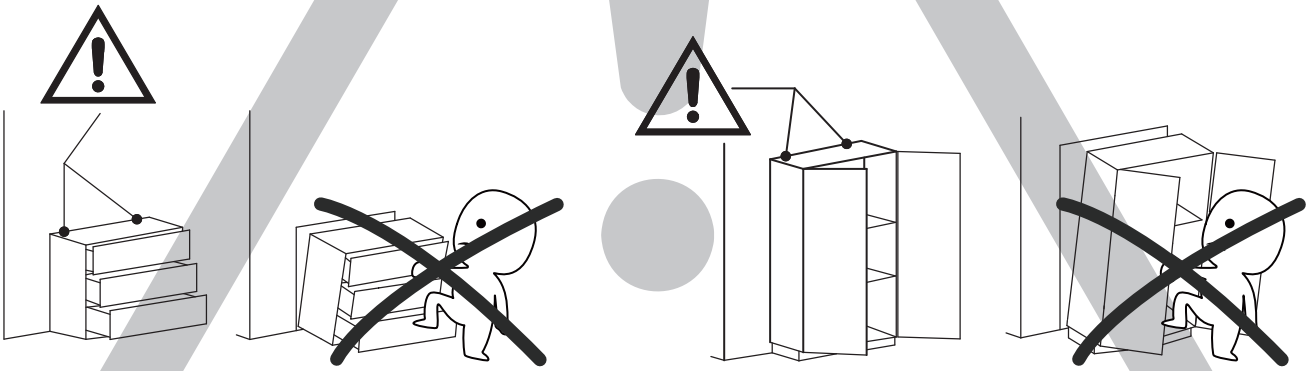

ANTI-TOPPLE WARNING !

Overturned furniture can cause serious or fatal crush injuries. To prevent tipping over, be sure to use the wall attachment, if not included with this product. Please purchase the wall attachment that fit your wall. If unsure, seek professional advice. Please read and follow each step of the instructions carefully.

IMPORTANT !

It is important that any product which is assembled using any kind of screw is re-tightened 2 weeks after assembly,and once every 3 months - in order to assure stability through-out the lifespan of the product.

For regular maintenance and cleaning of the product, for the frame, please use a rag dipped in neutral detergent to fully wipe it, and then dry it with a clean rag.For glass materials, wipe with a rag dampened with water glass cleaner, and then dry with a dry rag.

Do not use an electric screwdriver, and do not use too much force when installing, because the board is easy to break.

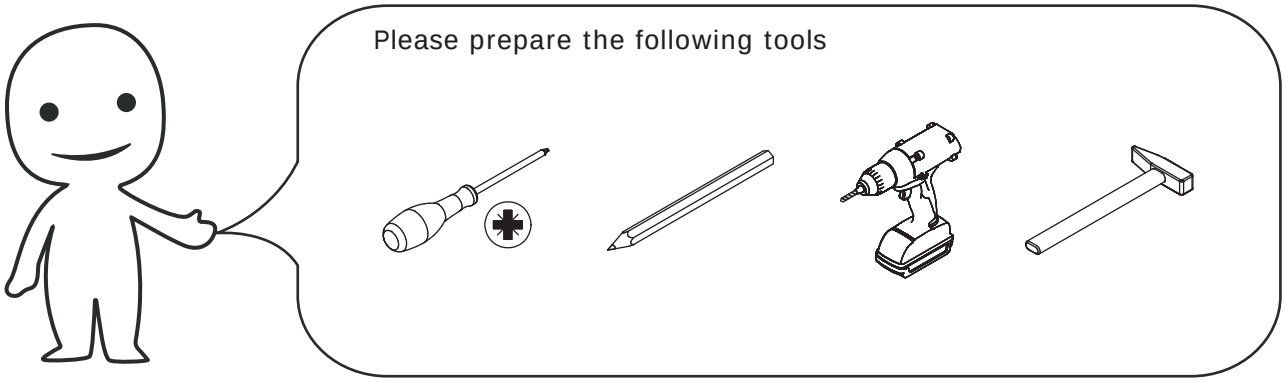

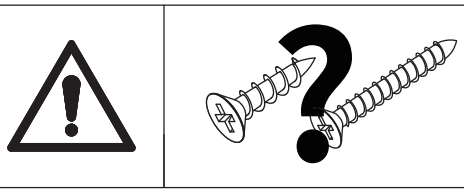

When installing, please carefully confirm whether each screw corresponds to the manual, accessories with similar shapes can be distinguished by size

A x 84	B x 34	C x 84	G x 2	H x 4
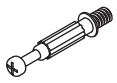	 M7 x 50 mm		 ∅8 x 40 mm	 M6 x 40 mm

M x 36	O x 11	P x 124	Q x 4	R x 12
 ST3.5 x 14 mm	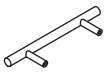	 ST3.5 x 12 mm	 M4 x 8 mm	 ZW15 mm

S x 6	T x 18	U x 4	V x 2	W x 20
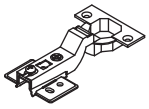 DW15 mm	 M4 x 20 mm	 ∅6 x 30 mm	 M4 x 20 mm	

X x 2	Y x 20	Z x 4	x 1	x 1
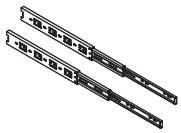 14''	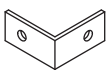	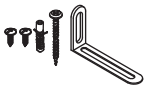		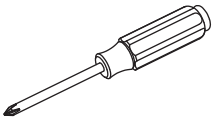

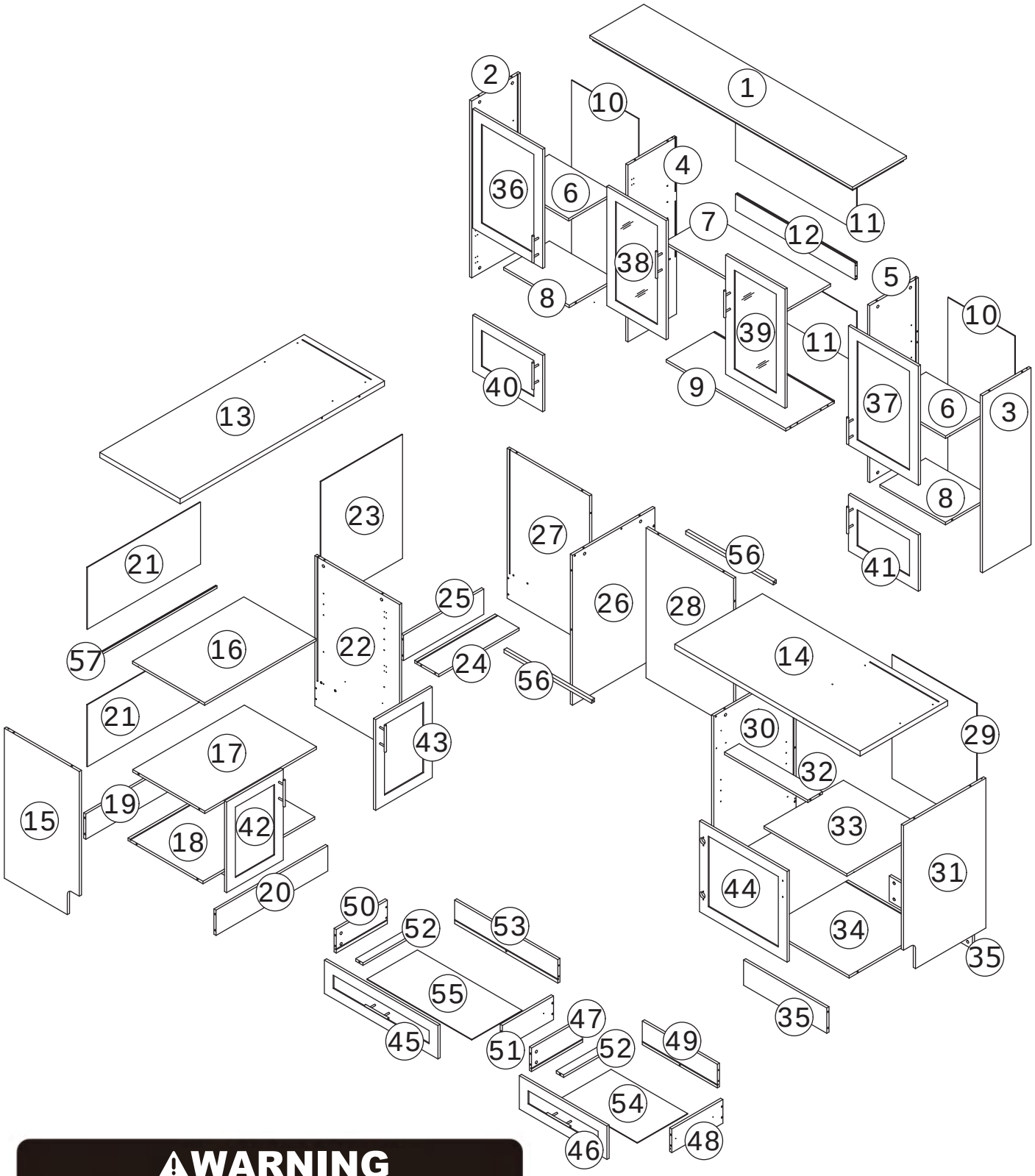

⚠WARNING





Children have died from furniture tipover.To reduce the risk of furniture tipover:

- ALWAYS install Anti-tip device provided.
- NEVER put a TV on this product.
- NEVER allow children to stand,climb or hang on drawers,doors,or shelves.
- NEVER open more than one drawer at a time.
- Place heaviest items in the lowest drawers.

This is a permanent label.
Do not remove!

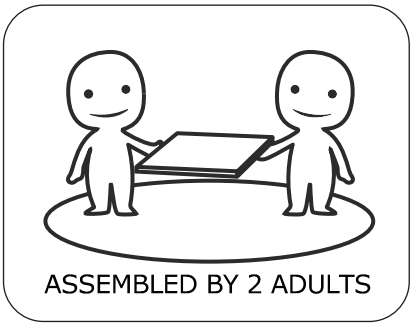

Slides Must Be Separated Before Assembly.
After Separated, Set Aside Until Needed for Assembly.

Las diapositivas deben separarse antes del montaje.
Después de la separación, déjelo a un lado hasta que sea necesario.

Les glissières doivent être séparées avant l'assemblage.
Après la séparation, mettez de côté jusqu'au moment de l'assemblage.

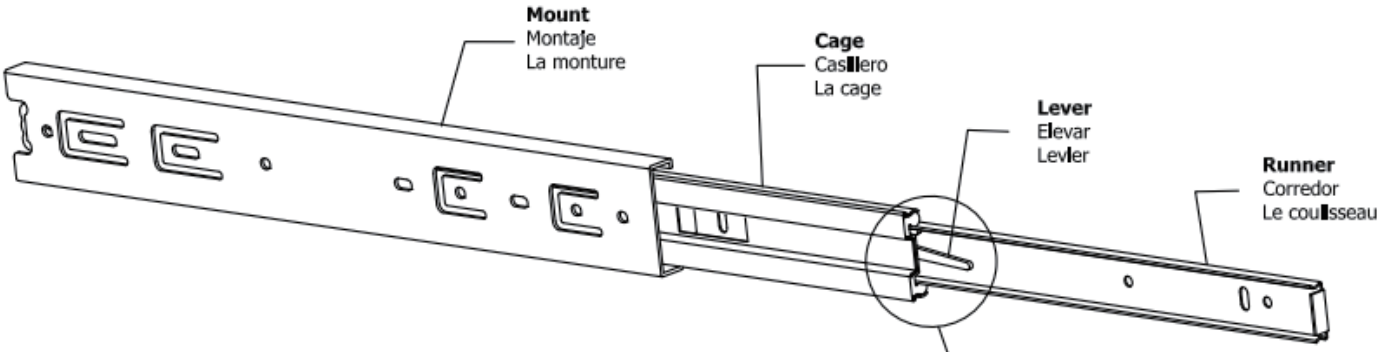

STEP 1: Extend Slide
Extender la diapositiva
Extendre la diapositive

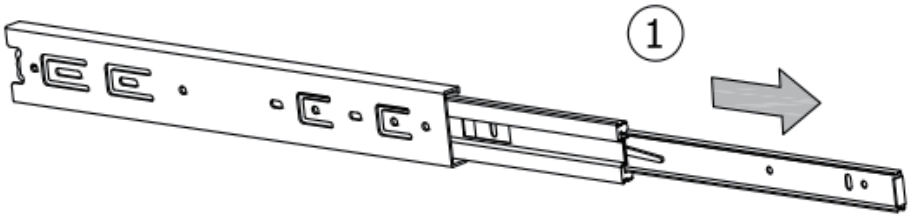

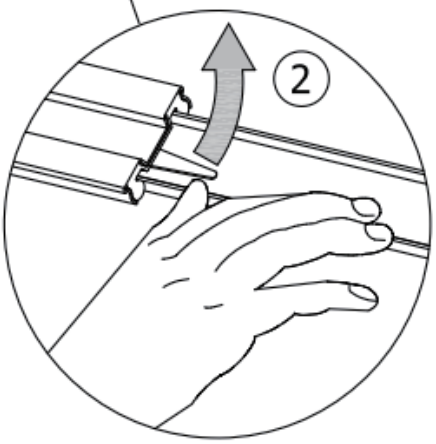

STEP 2: Push Lever UP
Empujar hacia arriba
Lever le levier

STEP 3: Remove Runner
Quitar el corredor
Enlever le coureur

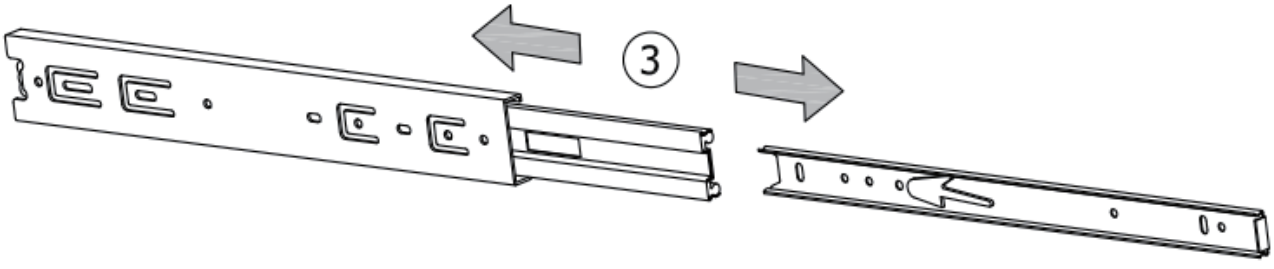

1

P x 4	X x 1	
 ST3.5 x 12 mm	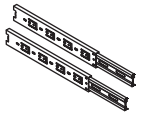	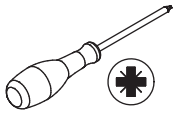

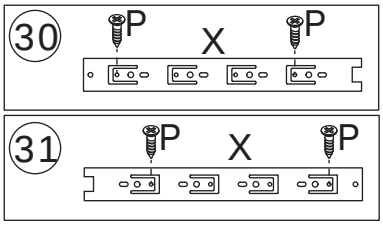

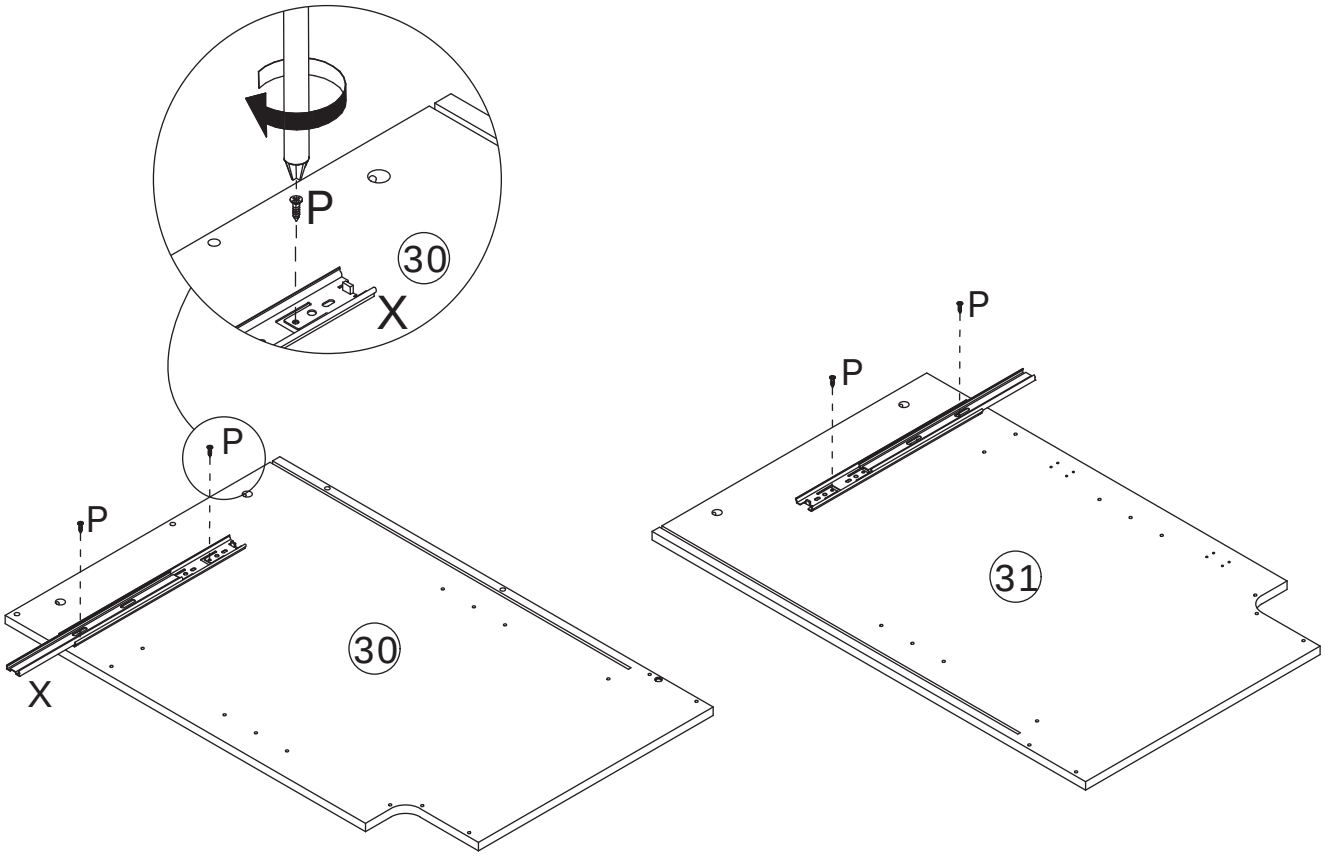

Secure slide rail (X) to plates 30 and 31 using screw (P).

2

P x 4



ST3.5 x 12 mm

X x 1

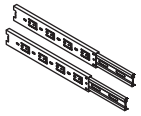

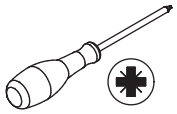

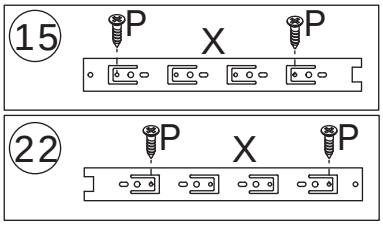

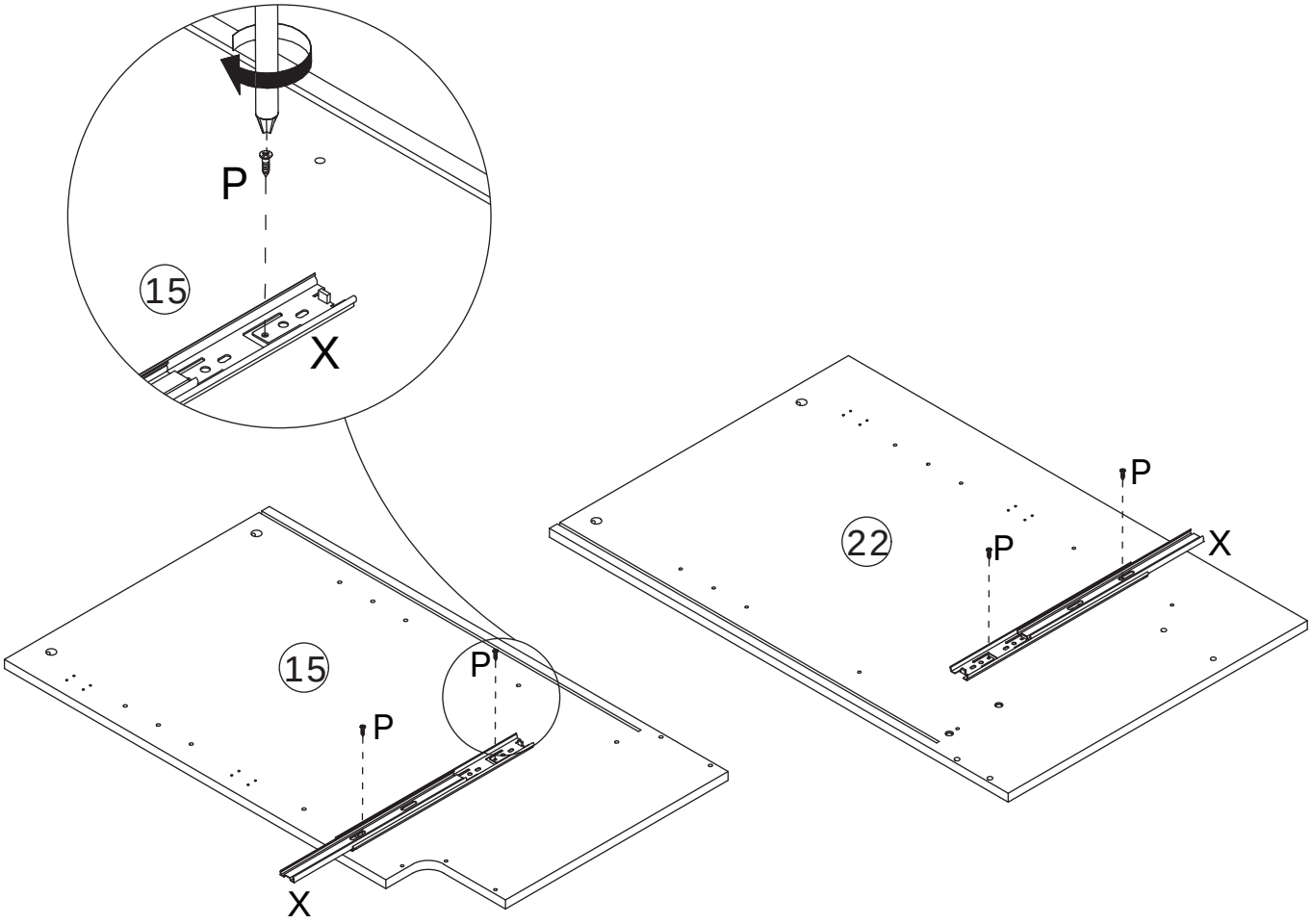

Secure slide rail (X) to plates 15 and 22 using screw (P).

3

A x 9

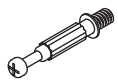

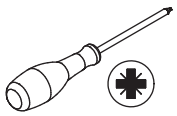

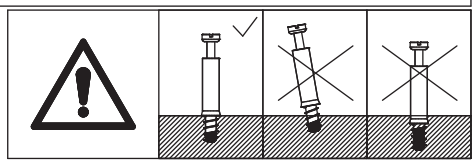

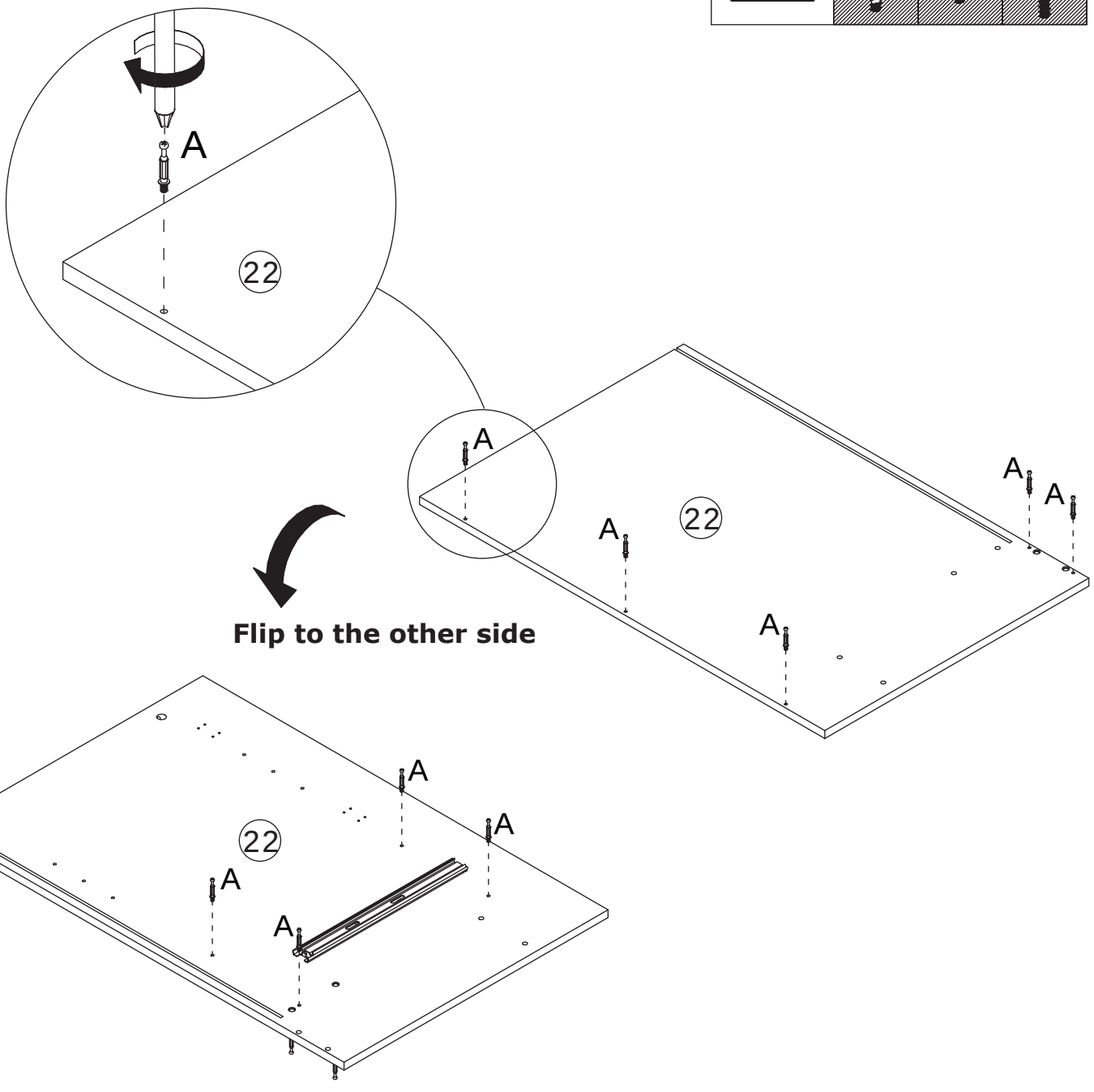

Screw eccentric rod (A) onto **both side of** plate 22.

4

A x 11

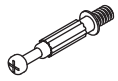

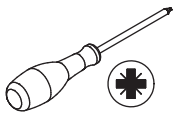

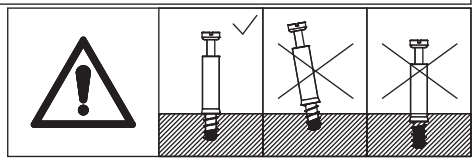

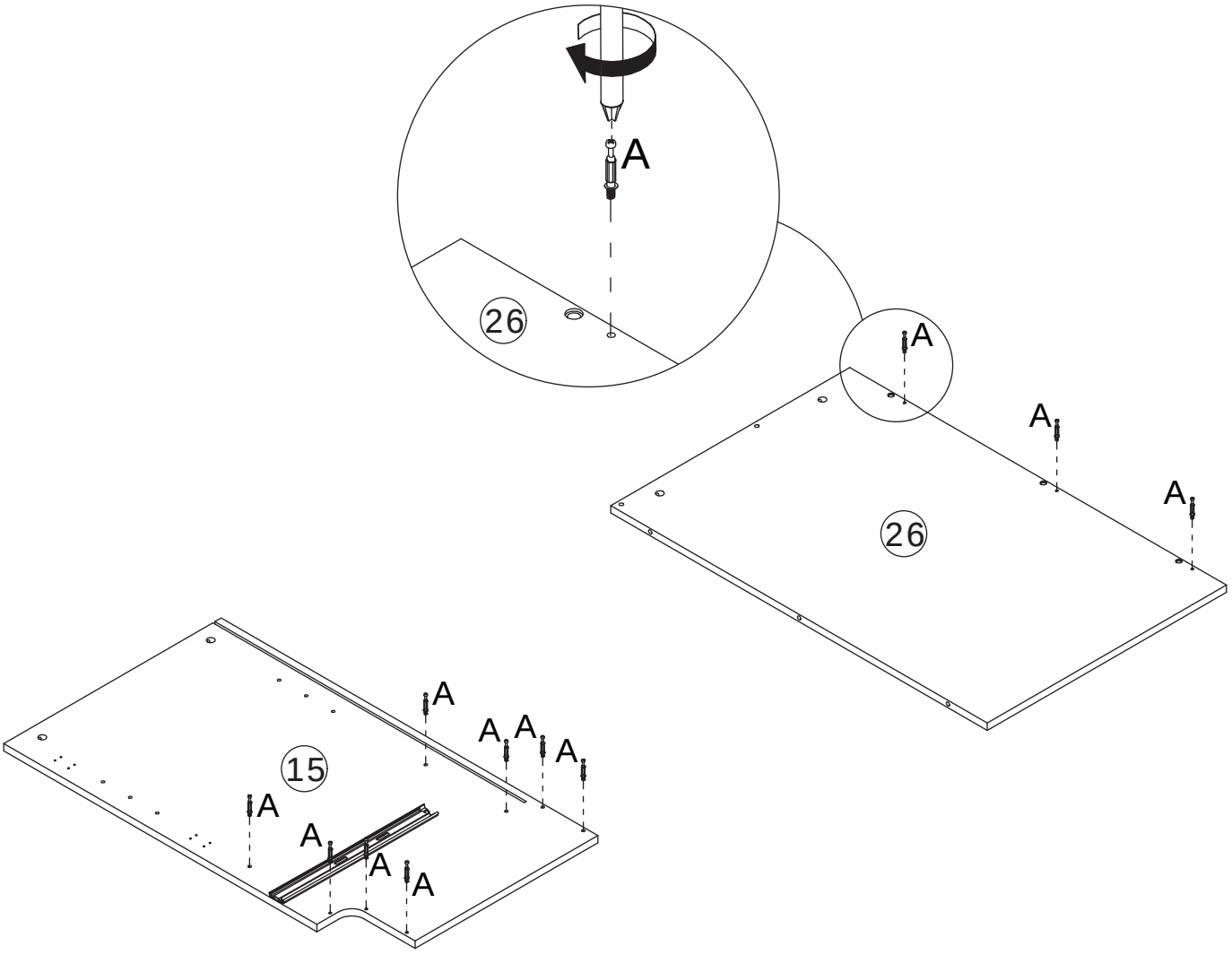

Screw eccentric rod (A) onto plates 15 and 26.

5

B x 2	x 1	
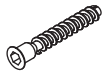 M7 x 50 mm		

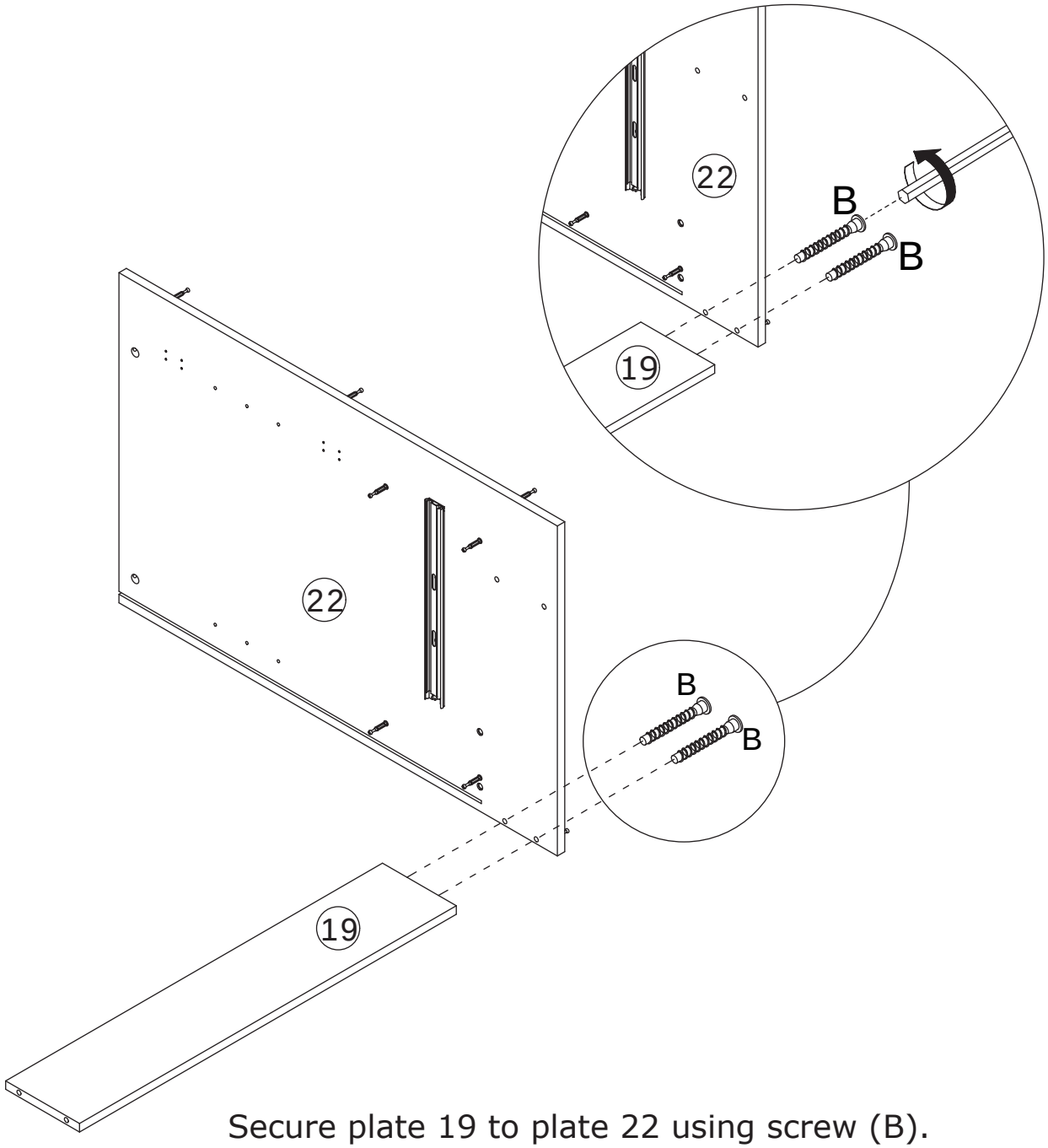

Secure plate 19 to plate 22 using screw (B).

6

B x 2	C x 2	x 1	
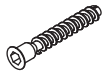 M7 x 50 mm			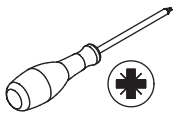

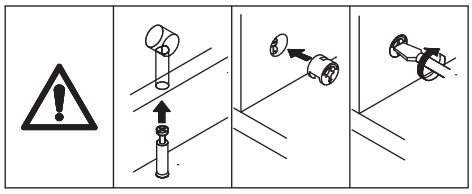

Connect plate 25 to plate 22, then tighten by turning eccentric wheel (C) clockwise.
Secure plate 24 to plate 22 using screw (B).

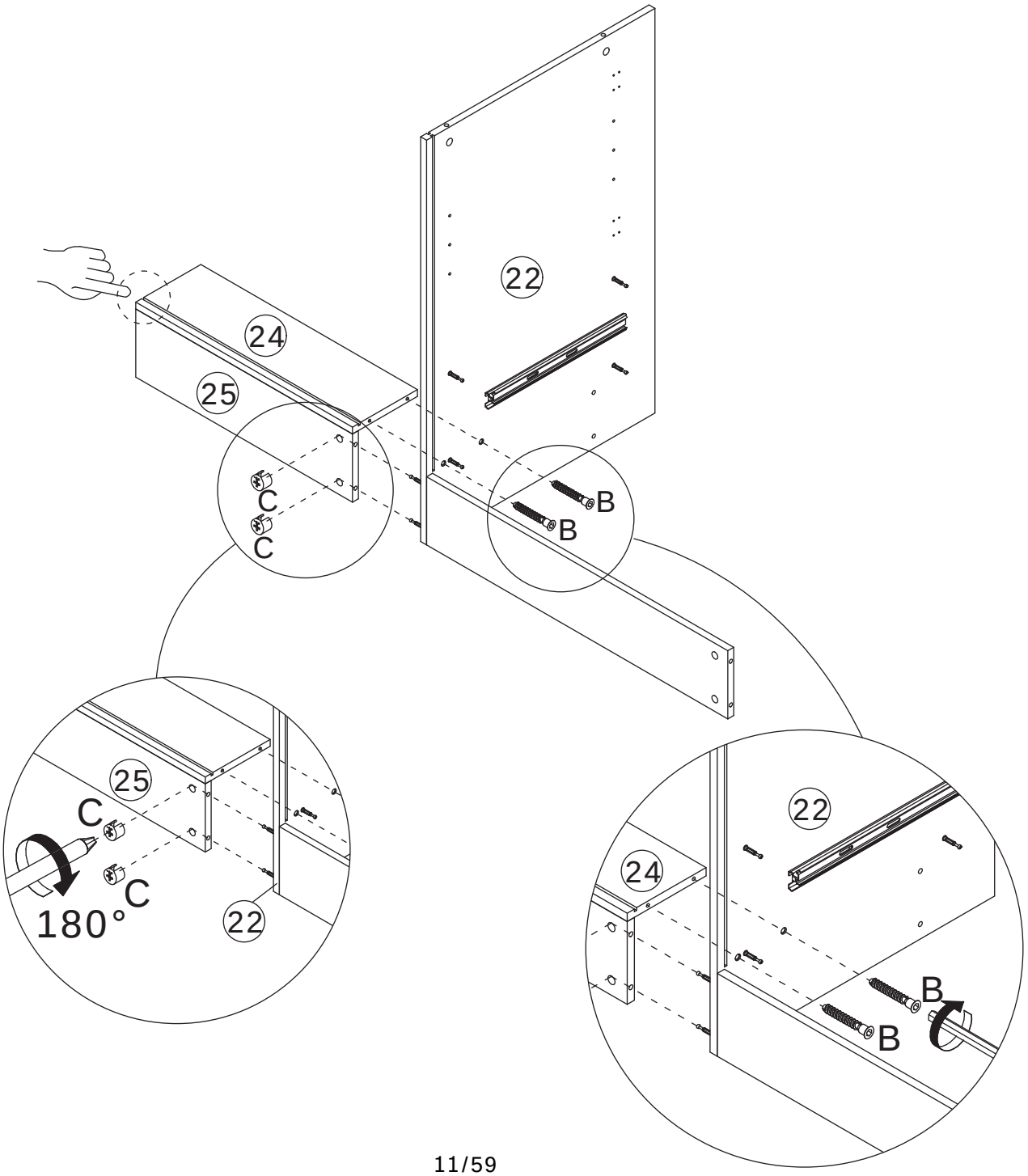

7

B x 4	x 1	
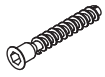 M7 x 50 mm		

Secure plates 24 and 25 to plate 27 using screw (B).

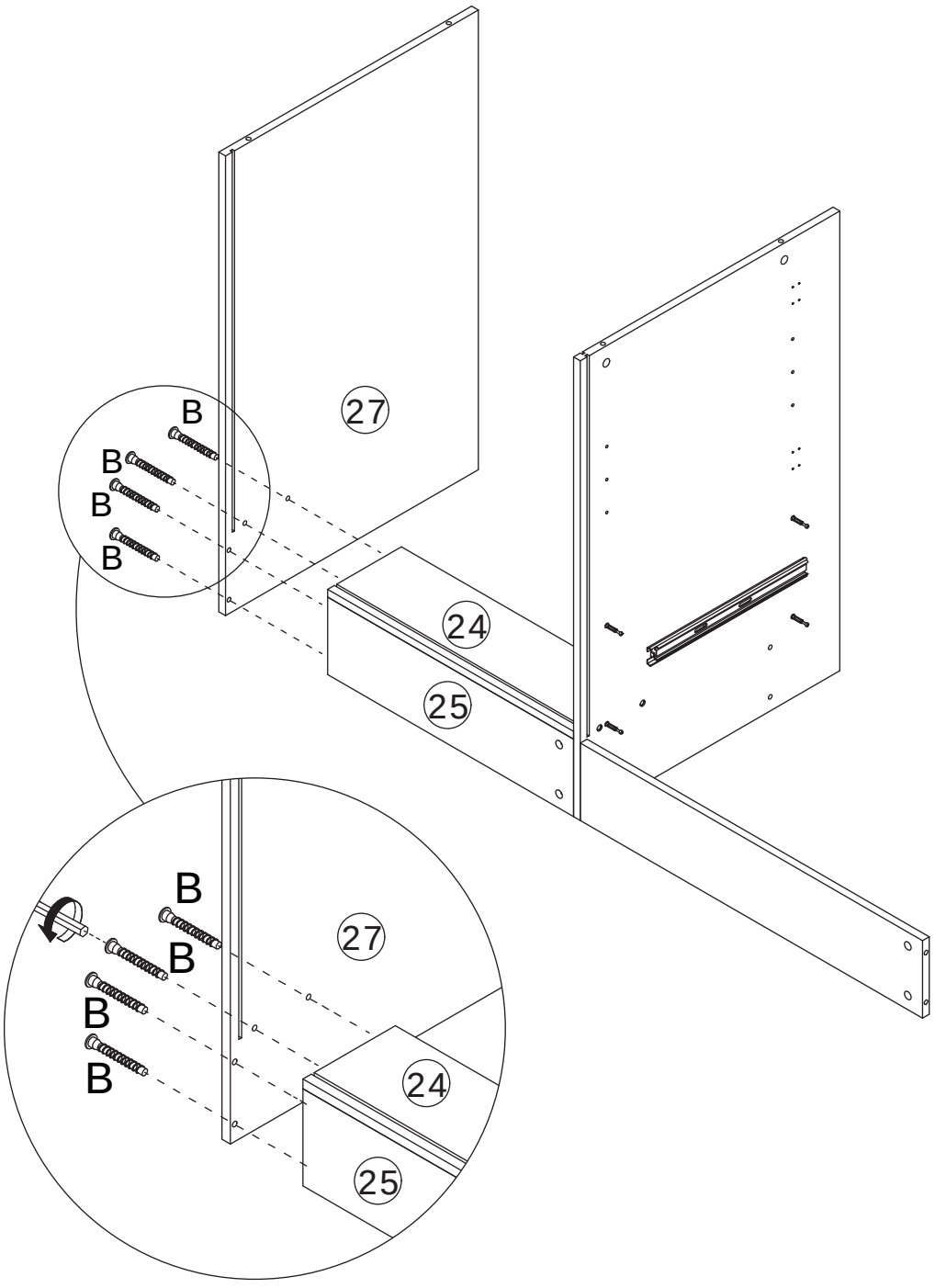

8

C x 3



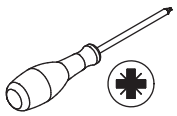

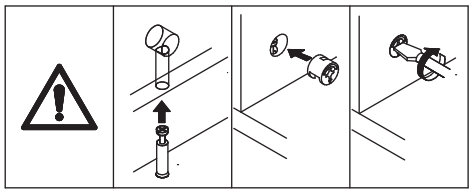

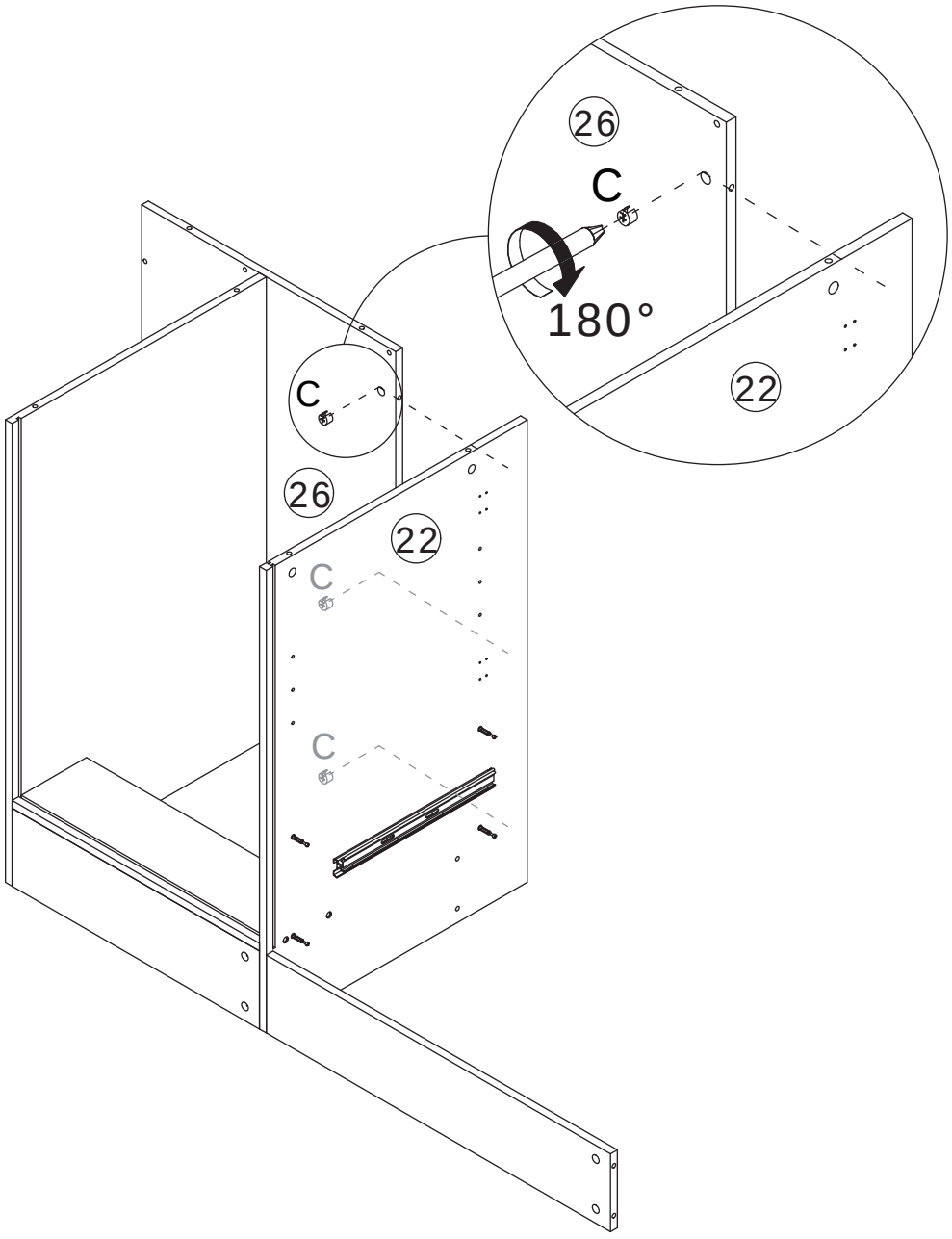

Attach plate 26 to plate 22, then tighten by turning eccentric wheel (C) clockwise.

9

B x 3	x 1	
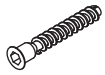 M7 x 50 mm		

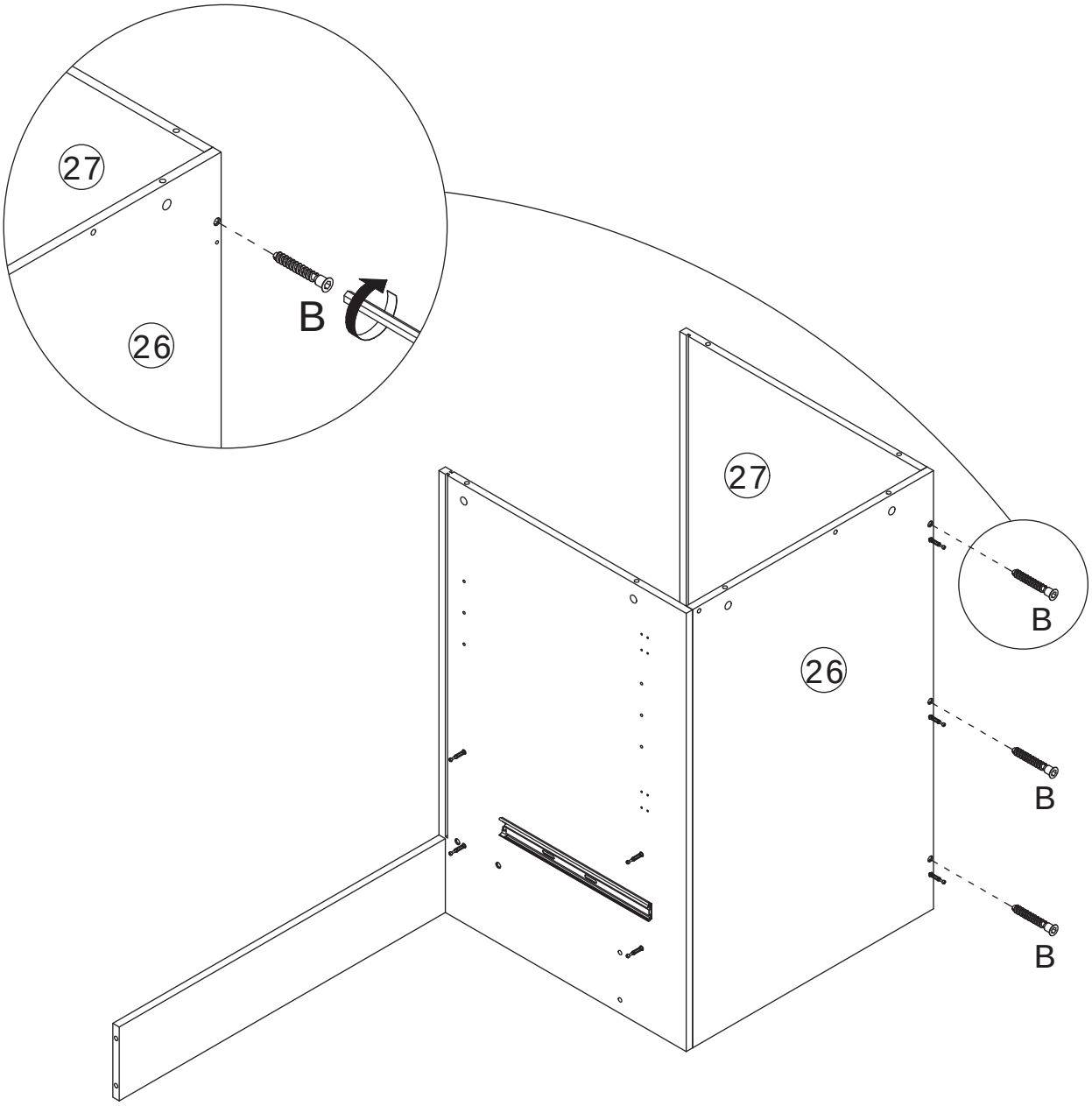

Secure plate 27 to plate 26 using screw (B).

10

C x 4



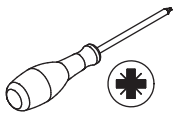

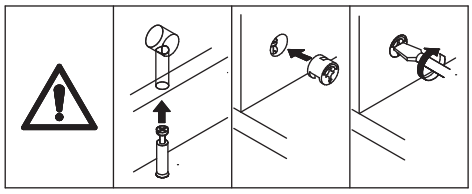

Connect plates 17 and 18 to plate 22, then tighten by turning eccentric wheel (C) clockwise.

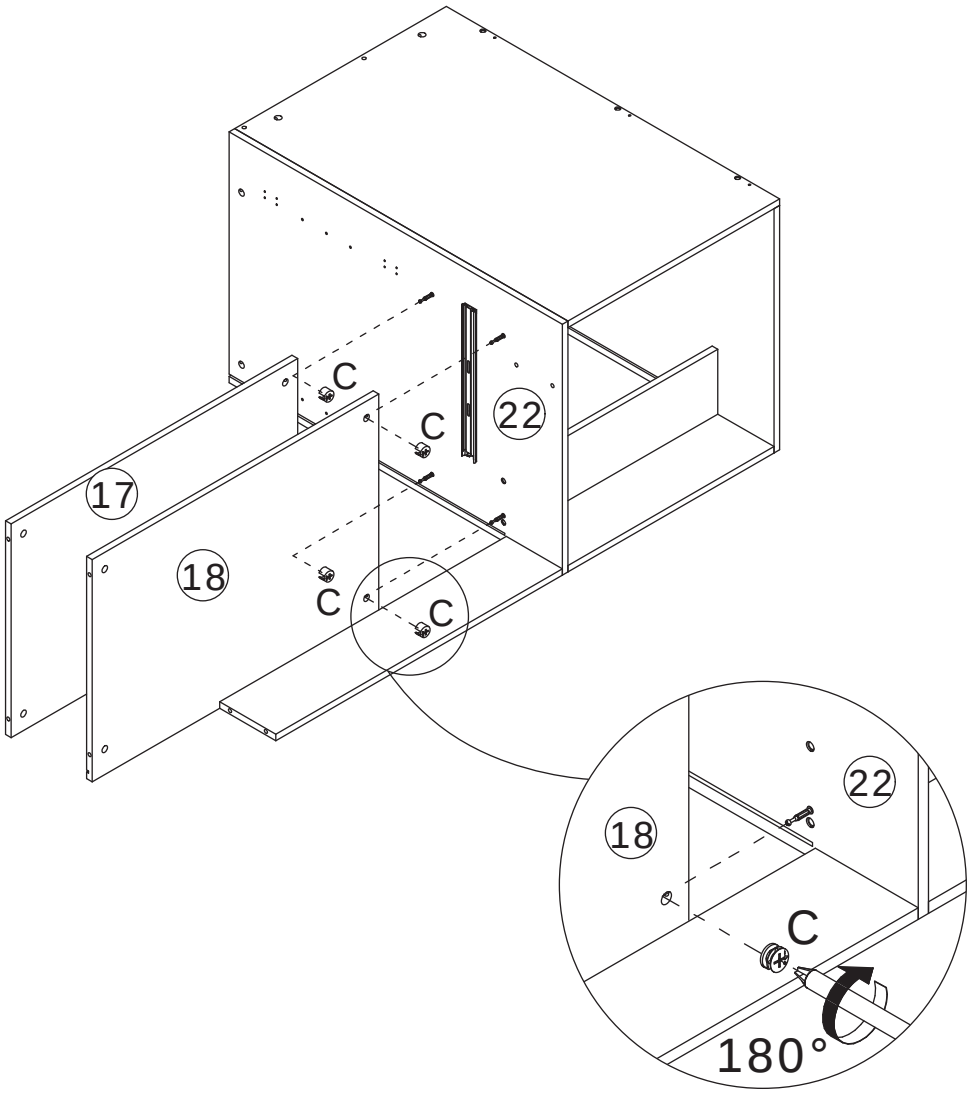

11

B x 2	x 1	
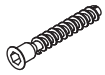 M7 x 50 mm		

Secure plate 20 to plate 22 using screw (B).

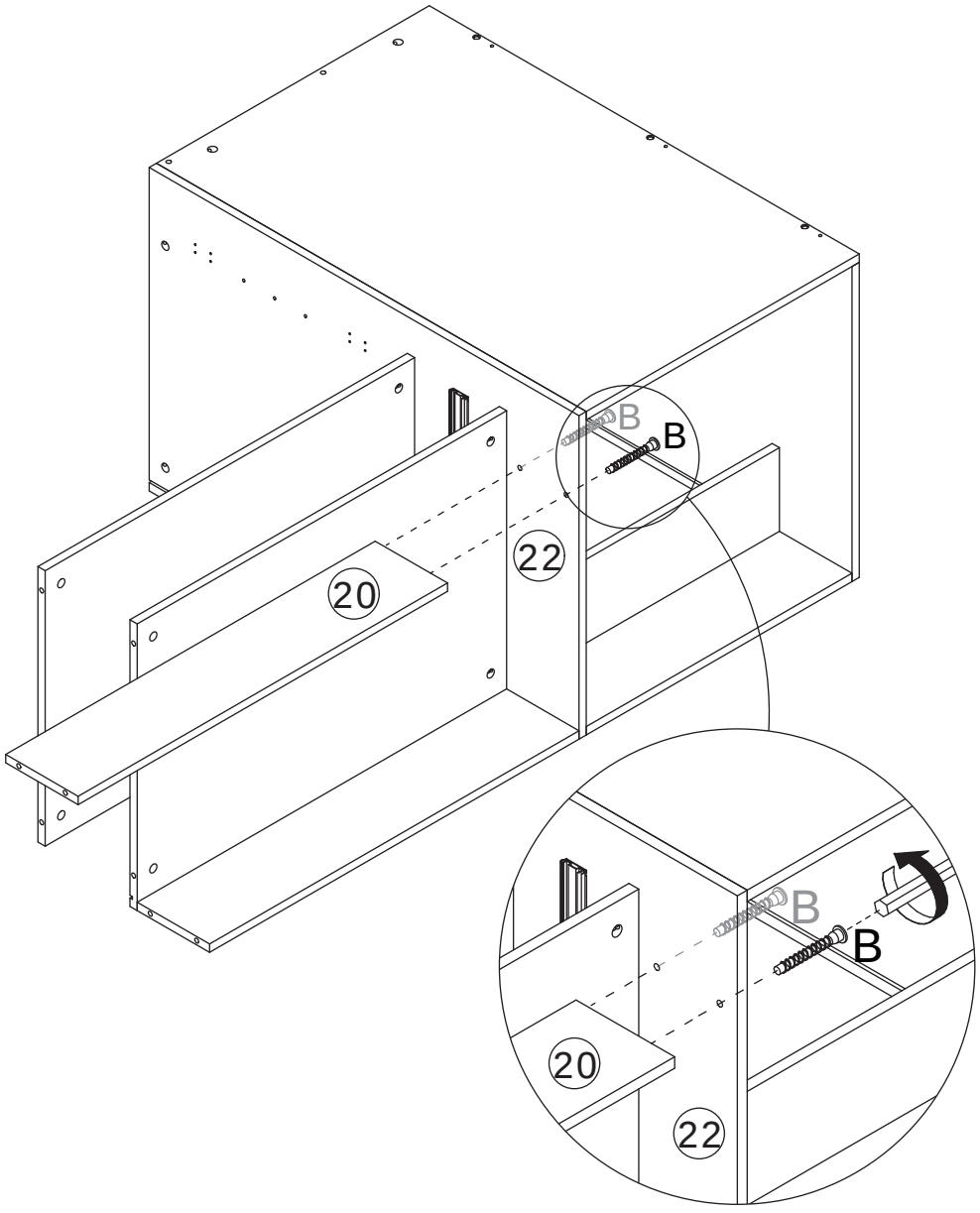

12

C x 6



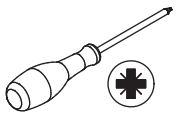

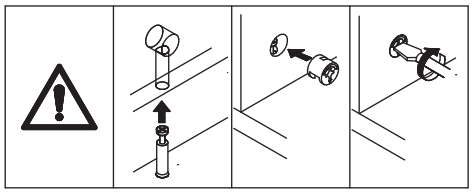

Connect plates 17, 18, and 20 to plate 15, then tighten by turning eccentric wheel (C) clockwise.

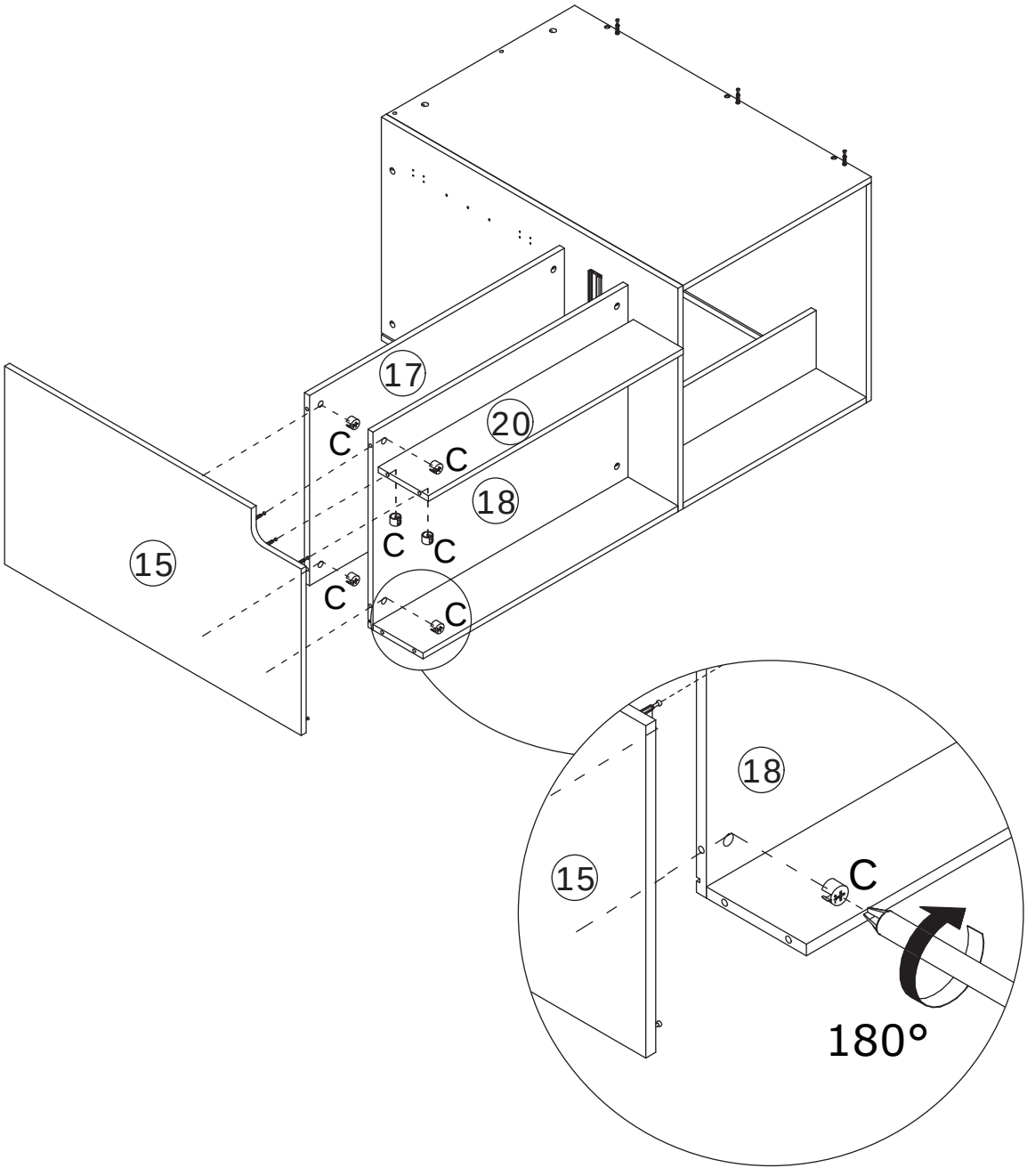

13

C x 2



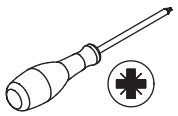

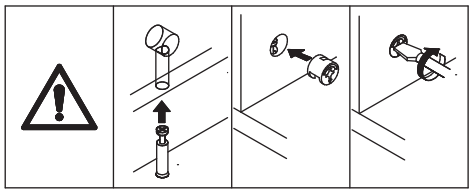

Insert eccentric wheel (C) into plate 19 and tighten them by turning clockwise.
Insert plates 21, 23 and strip 57 along the available slots.

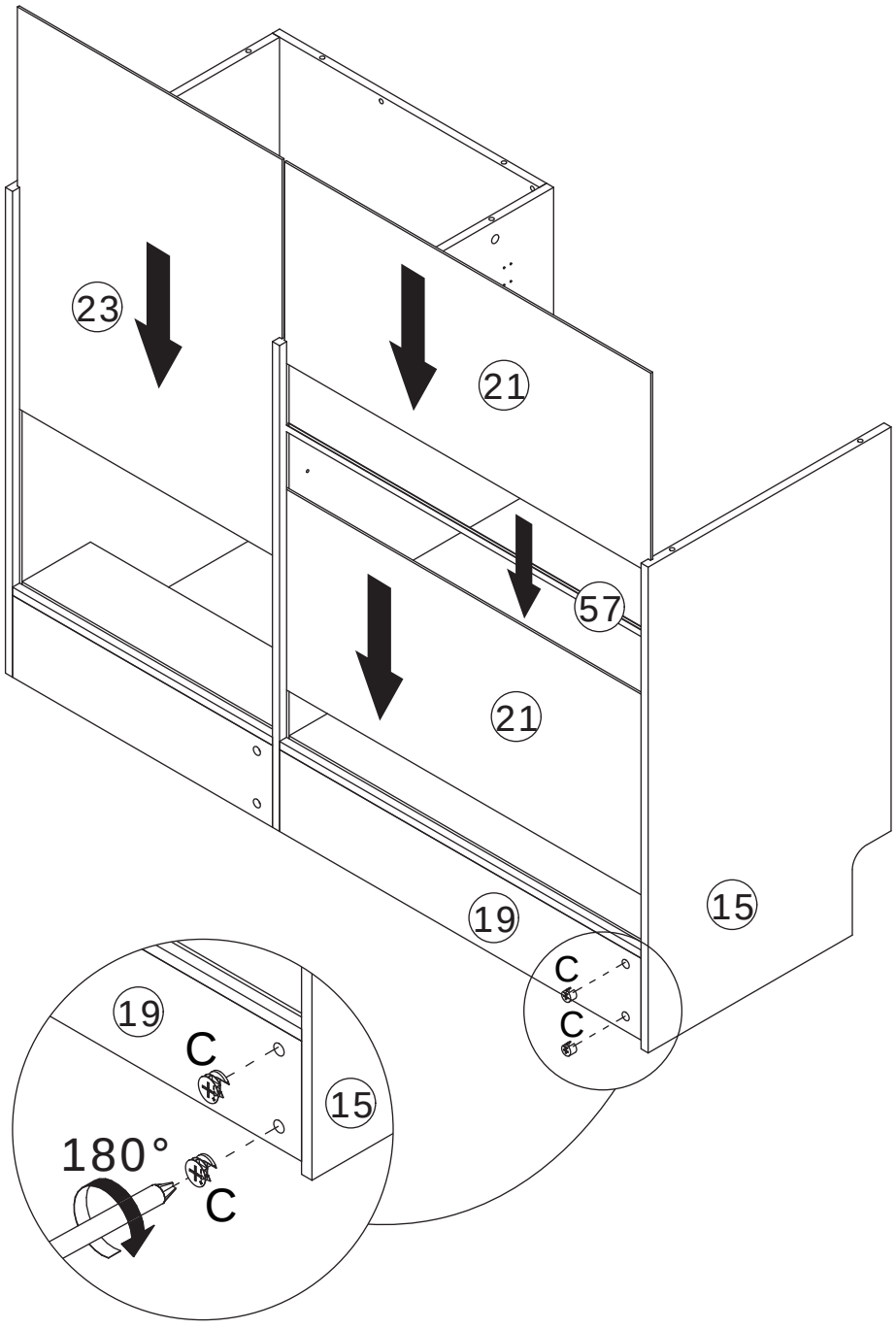

14

A x 16

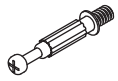

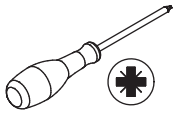

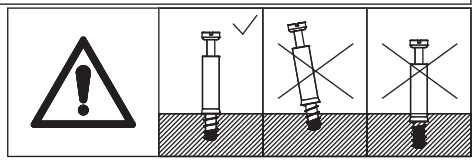

Screw eccentric rod (A) onto plates 30 and 31.

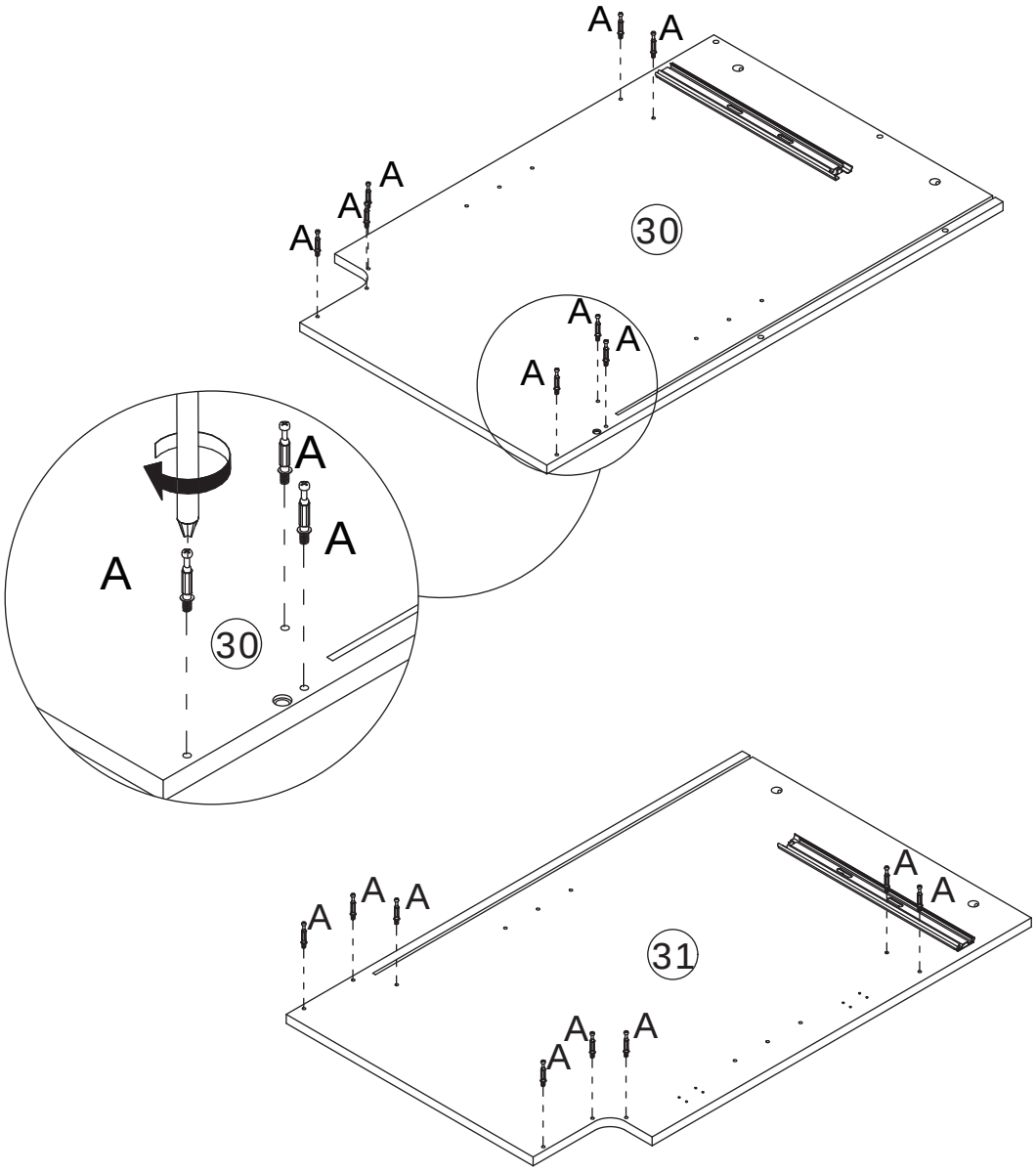

15

B x 3	x 1	
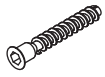 M7 x 50 mm		

Secure plate 28 to plate 30 using screw (B).

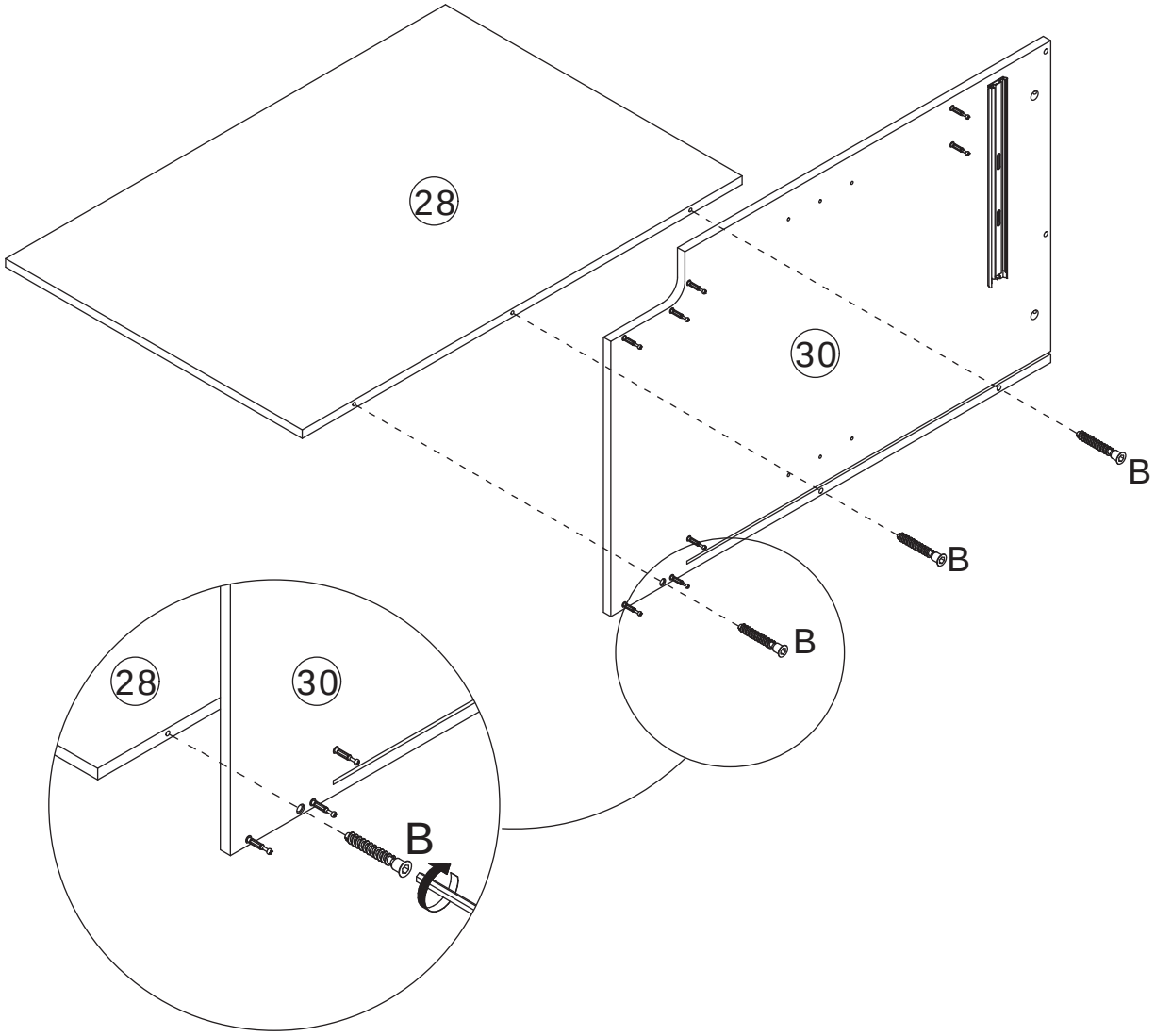

16

C x 8



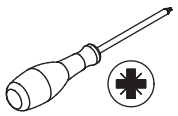

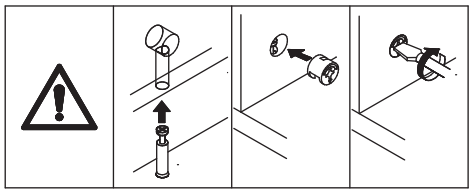

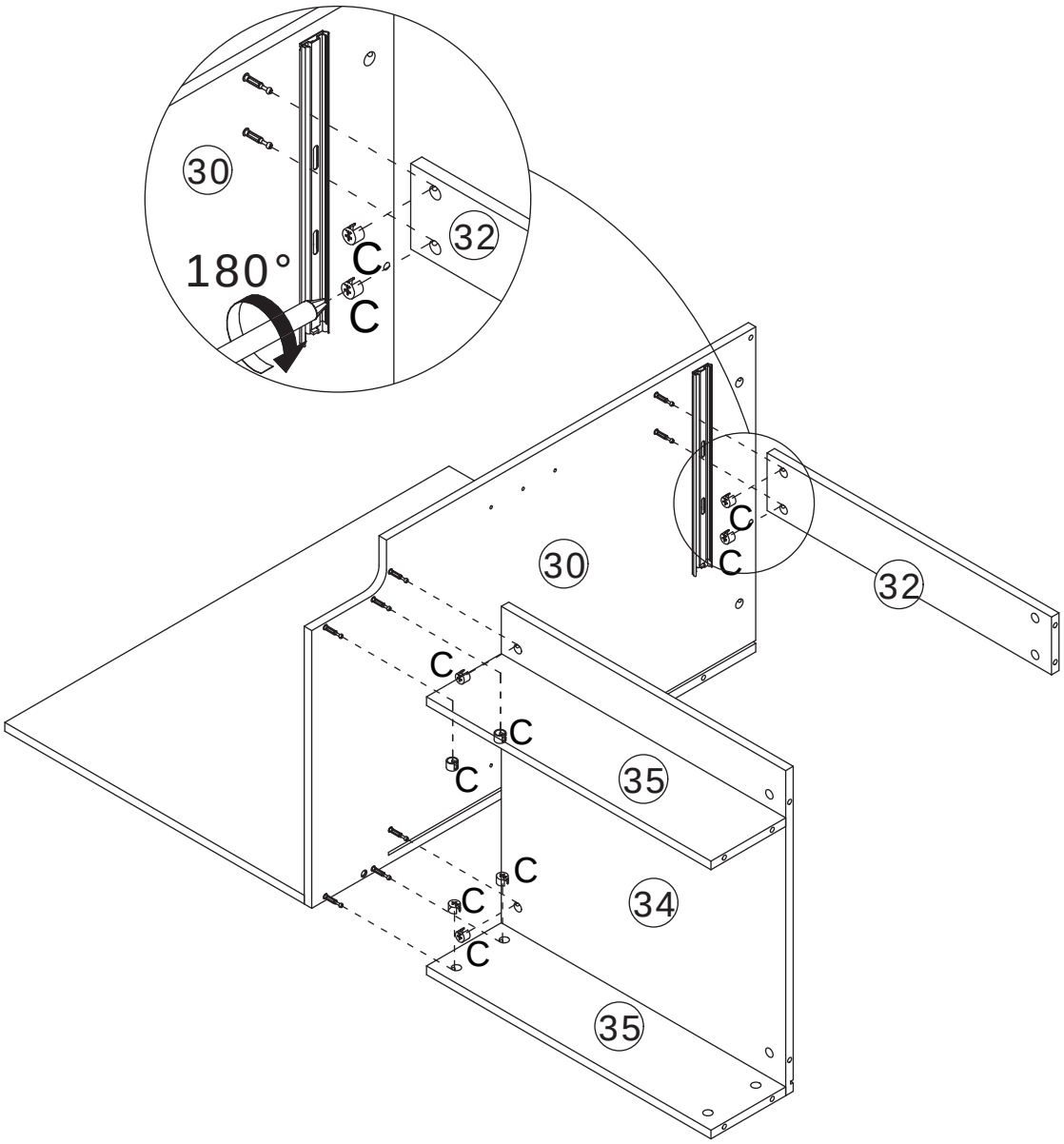

Attach plates 32, 34, and 35 to plate 30, then tighten by turning eccentric wheel (C) clockwise.

17

C x 8

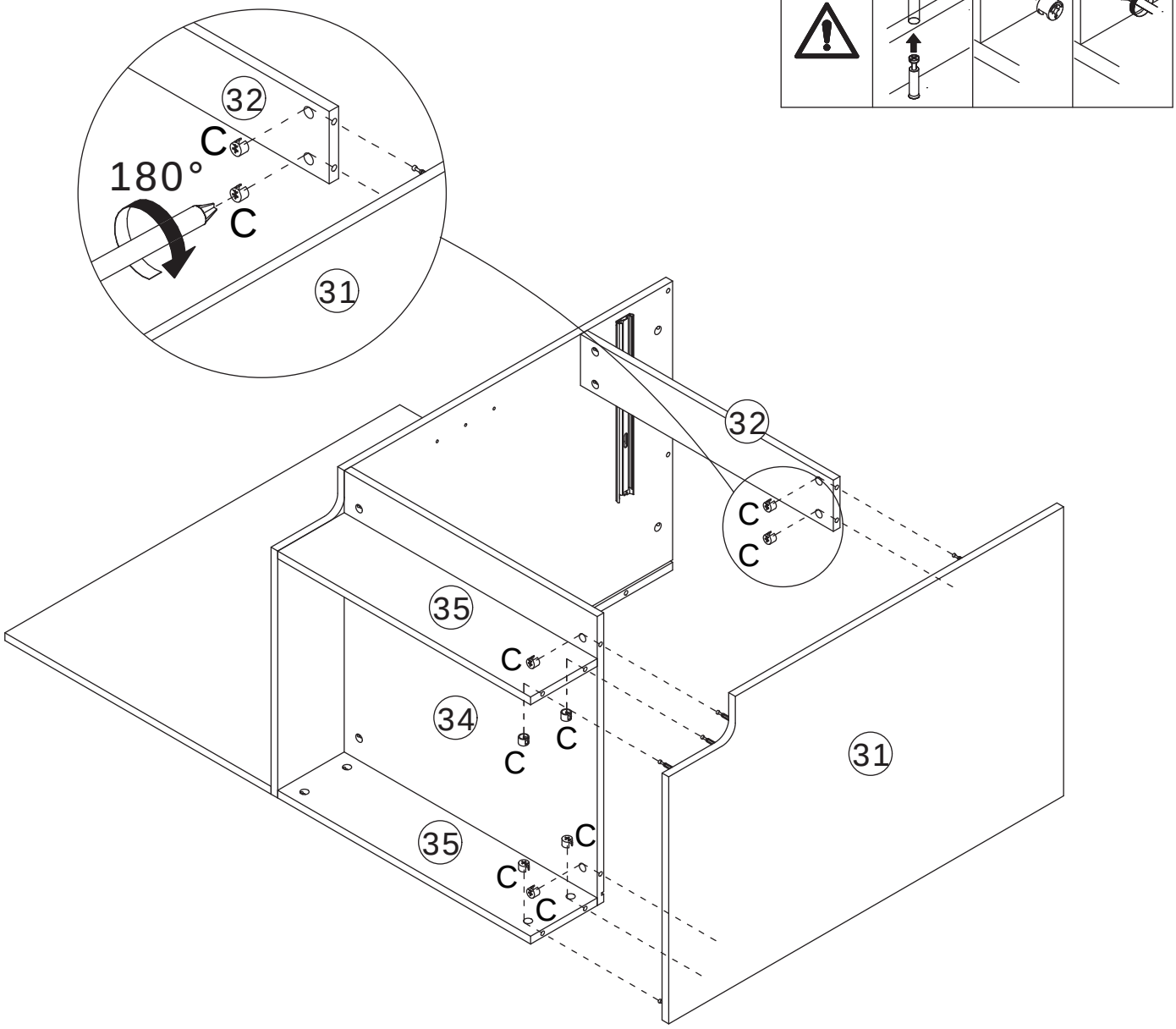

Connect plates 32, 34, and 35 to plate 31, then tighten by turning eccentric wheel (C) clockwise.

18

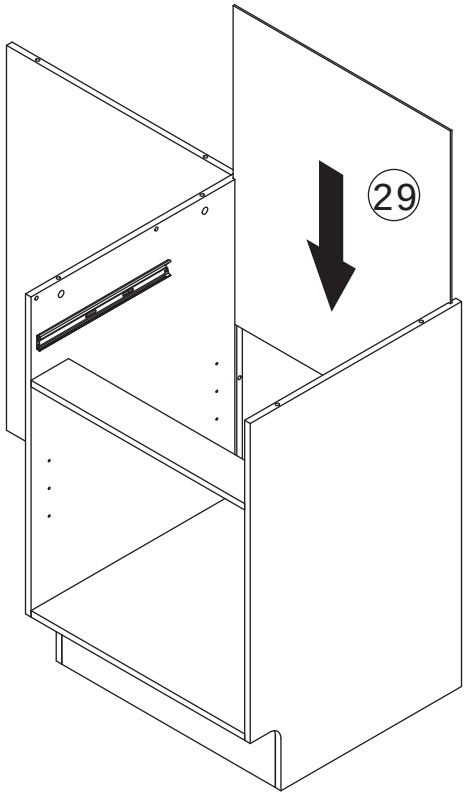

Insert plate 29 along the available slots.

19

C x 3	H x 4	
	 M6 x 40 mm	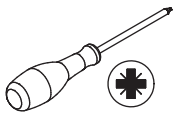

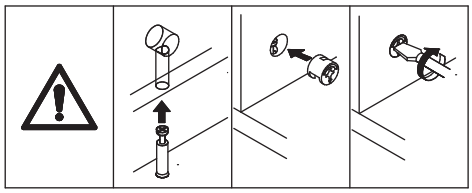

First, secure part 56 to plates 30 and 26 using screw (H).
Then, connect plate 28 to plate 26, then tighten by turning eccentric wheel (C) clockwise.

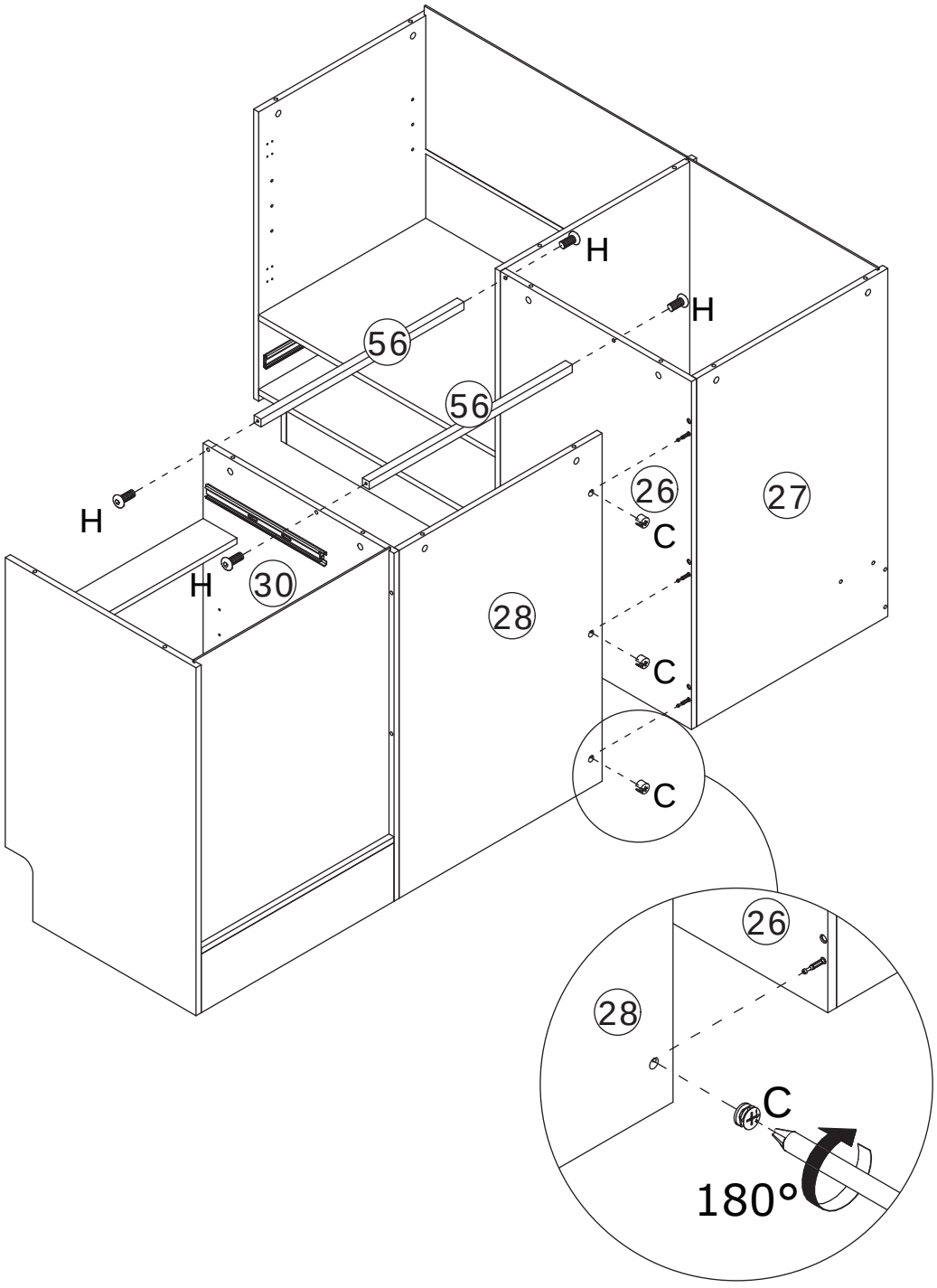

20

A x 10

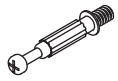

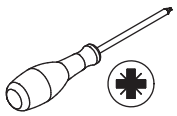

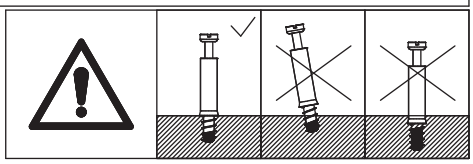

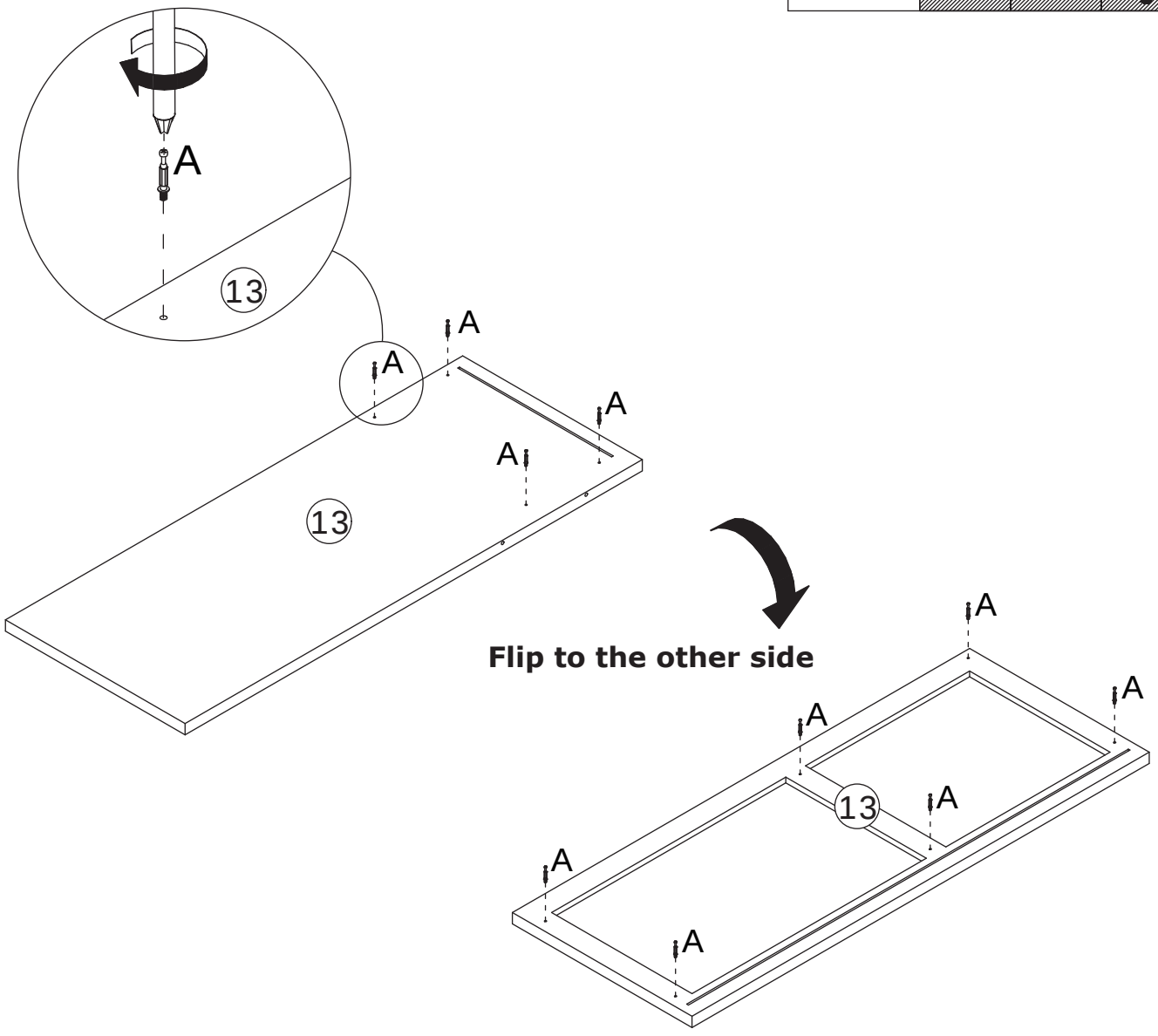

Screw eccentric rod (A) onto **both sides of** plate 13.

21

A x 12

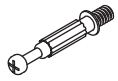

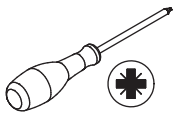

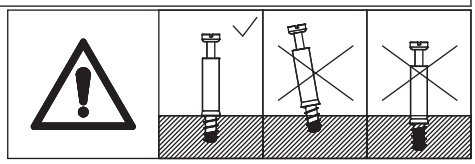

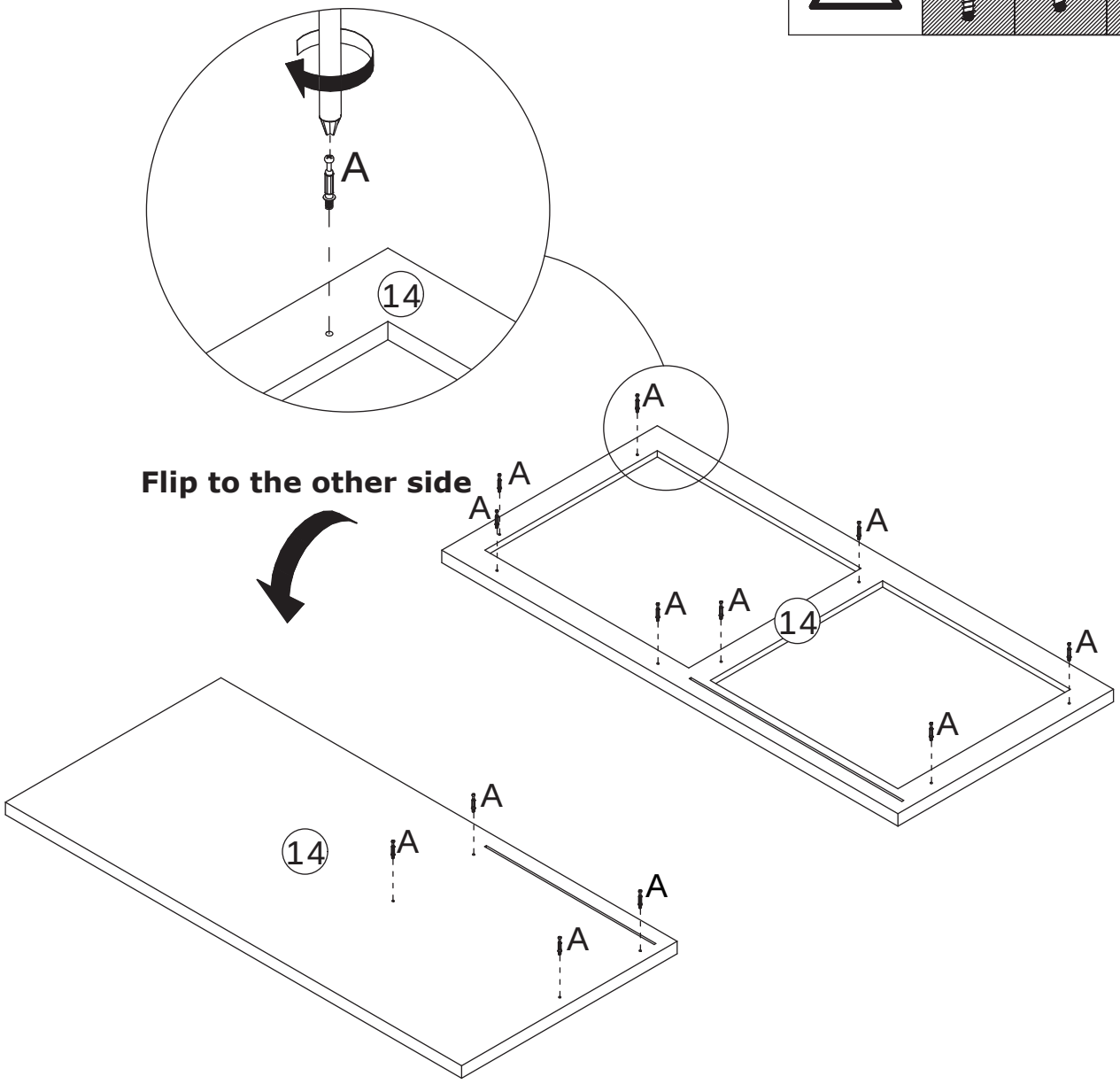

Screw eccentric rod (A) onto **both sides of** plate 14.

22

G x 2



∅8 x 40 mm

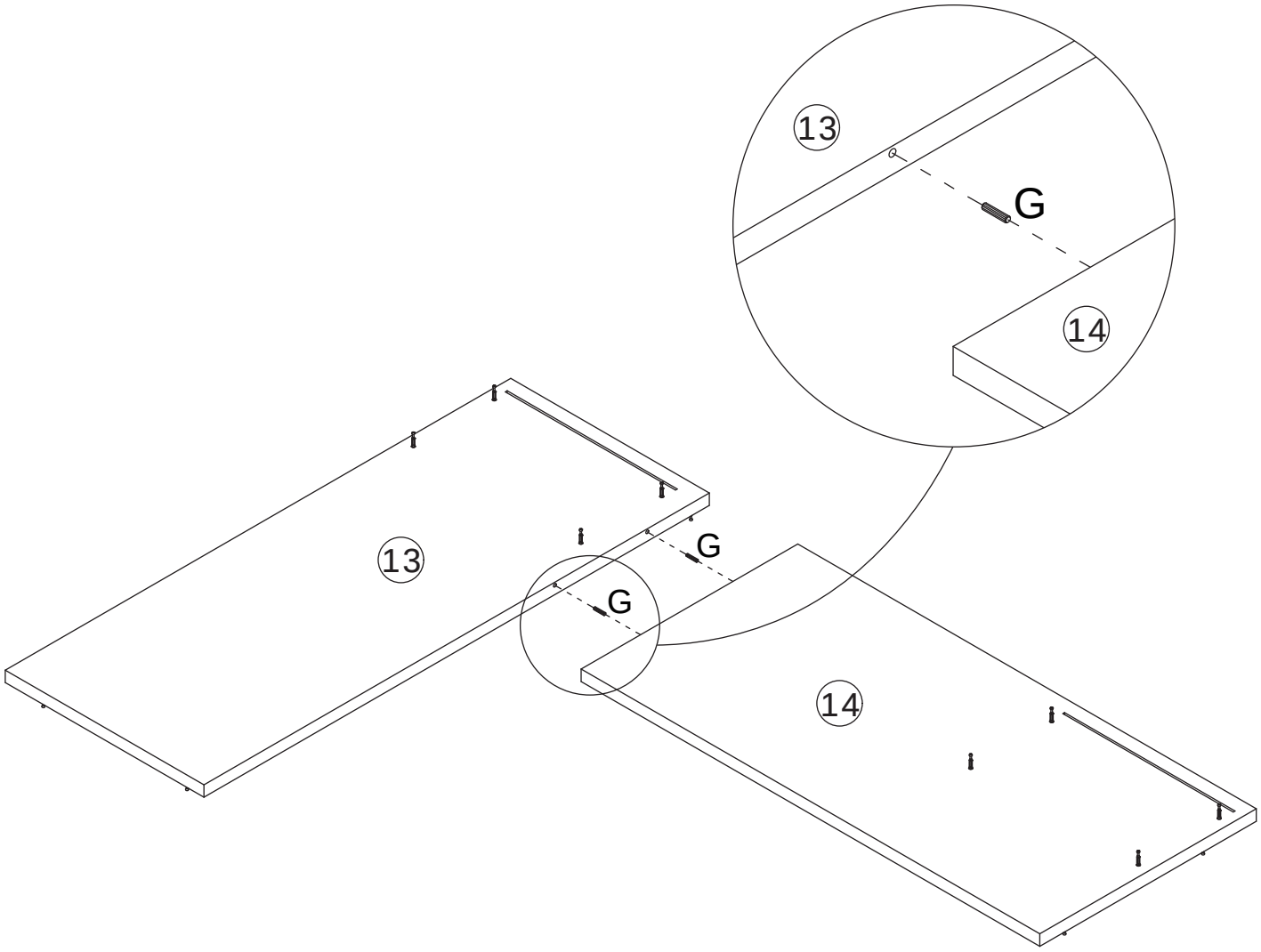

Connect plate 13 and 14 using wooden dowel (G).

23

C x 14



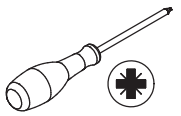

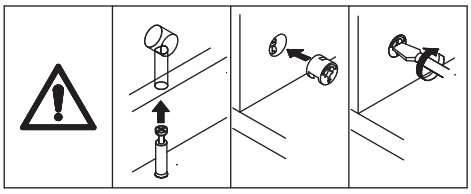

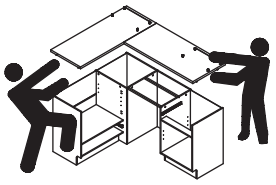

This step requires
2-4 people to install.

Connect plates 13 and 14 to the assembly, then tighten by turning eccentric wheel (C) clockwise.

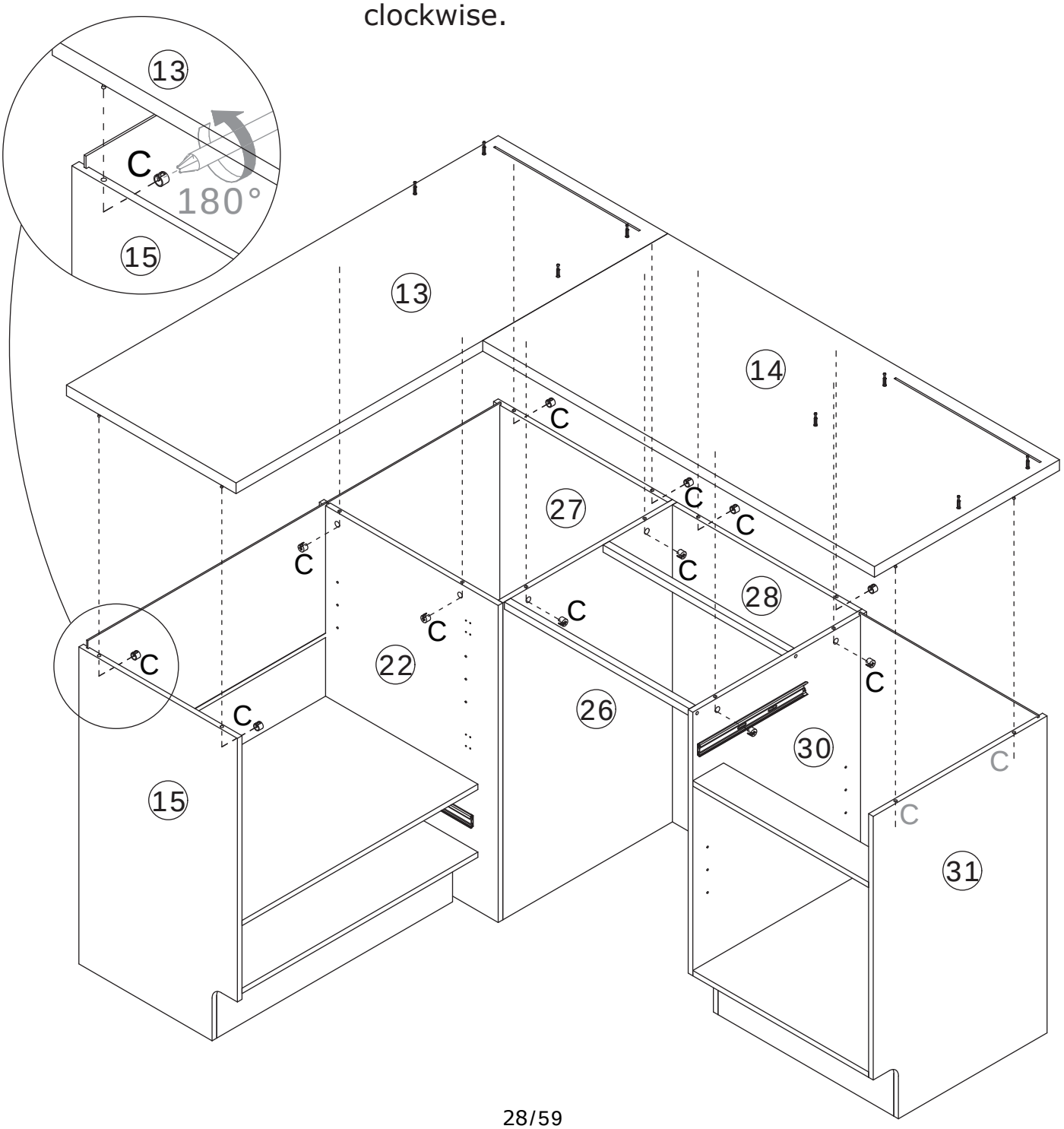

24

A x 16

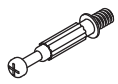

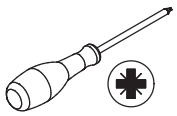

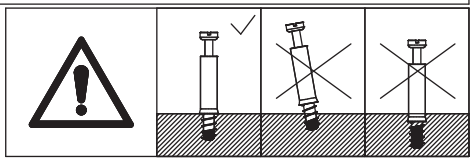

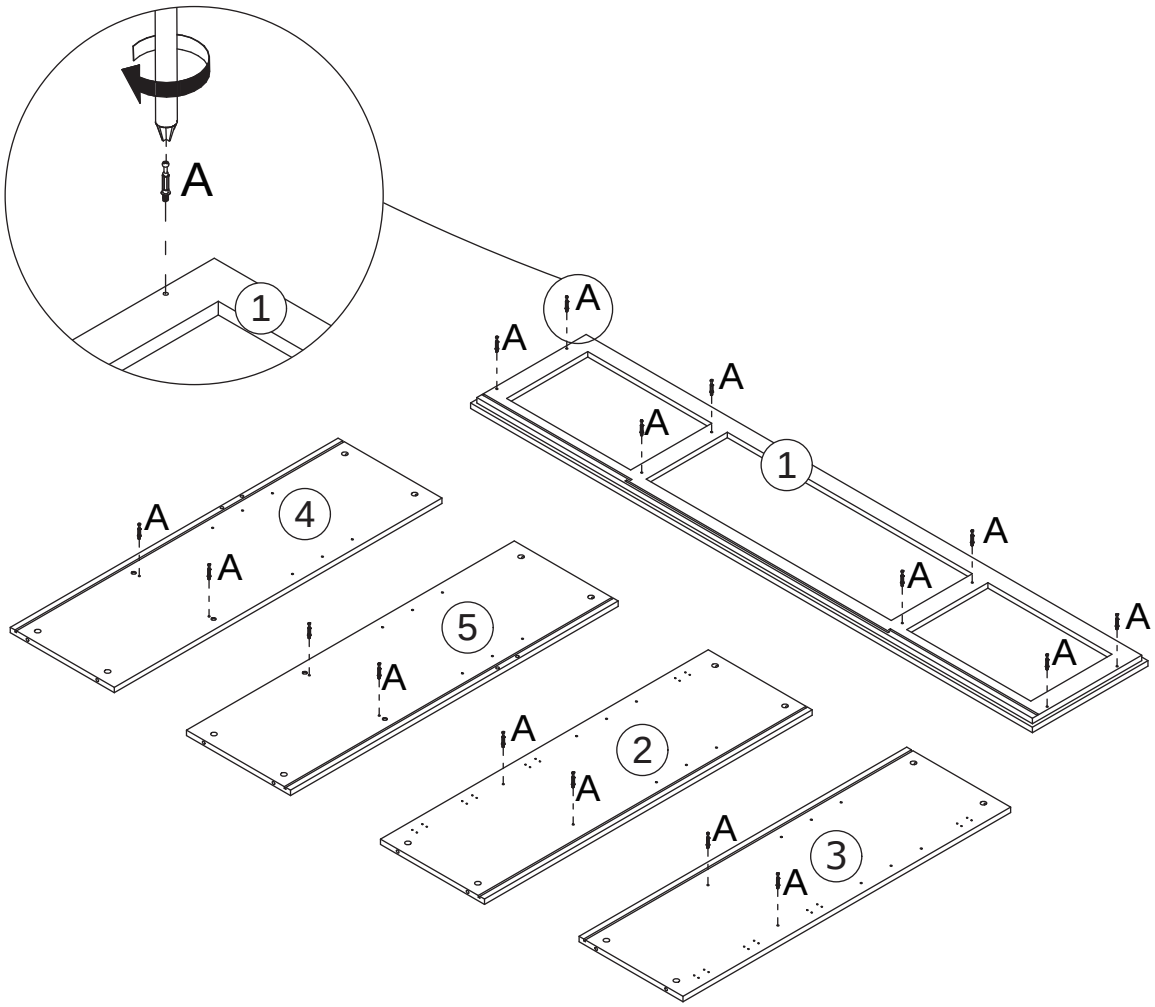
A
1
A
A
A

25

B x 4	U x 2	x 1	
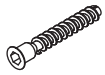			
M7 x 50 mm	∅6 x 30 mm		

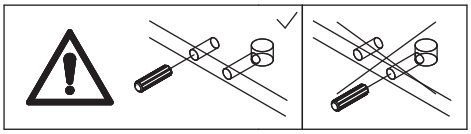

Connect plates 9 and 12 to plate 4 using wooden dowel (U), and secure them with screw (B).

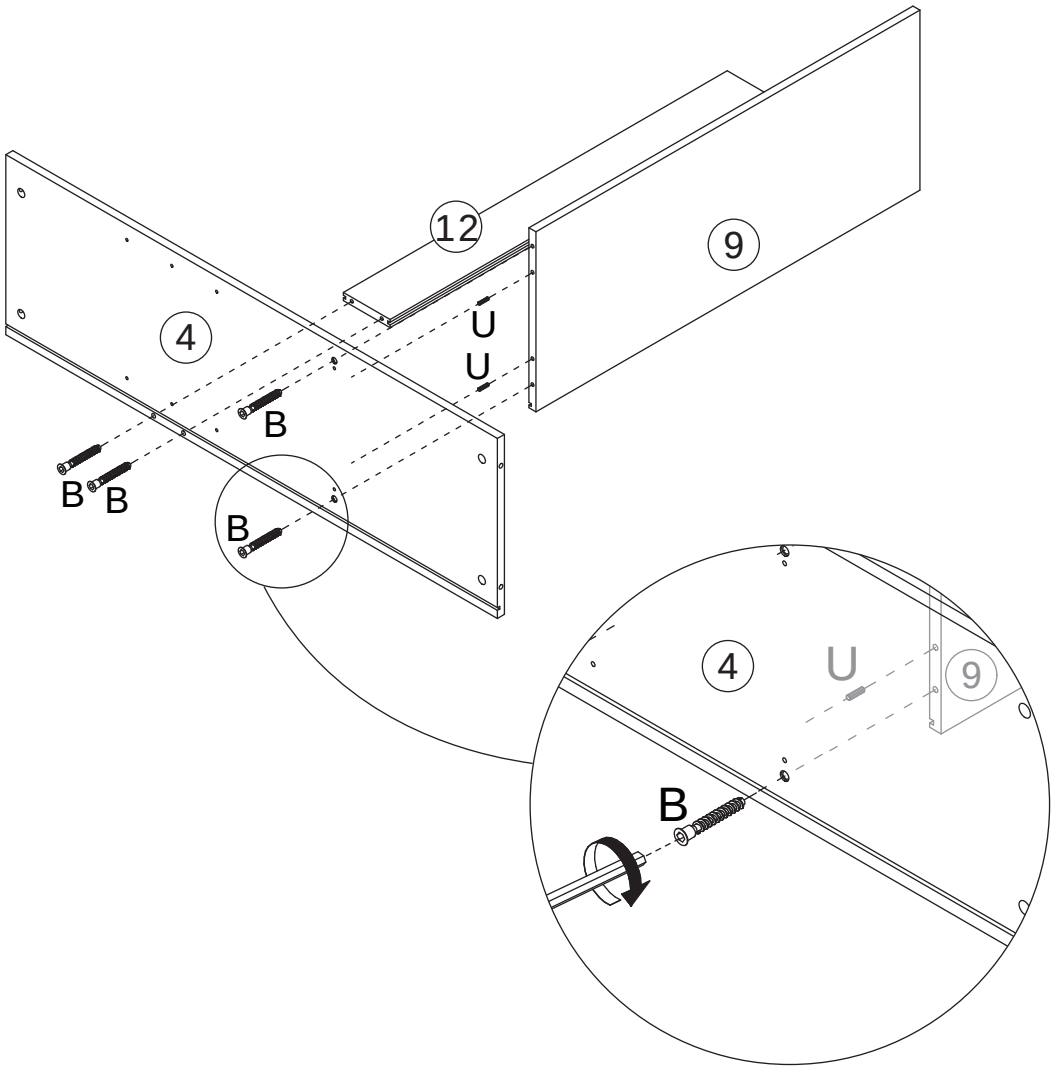

26

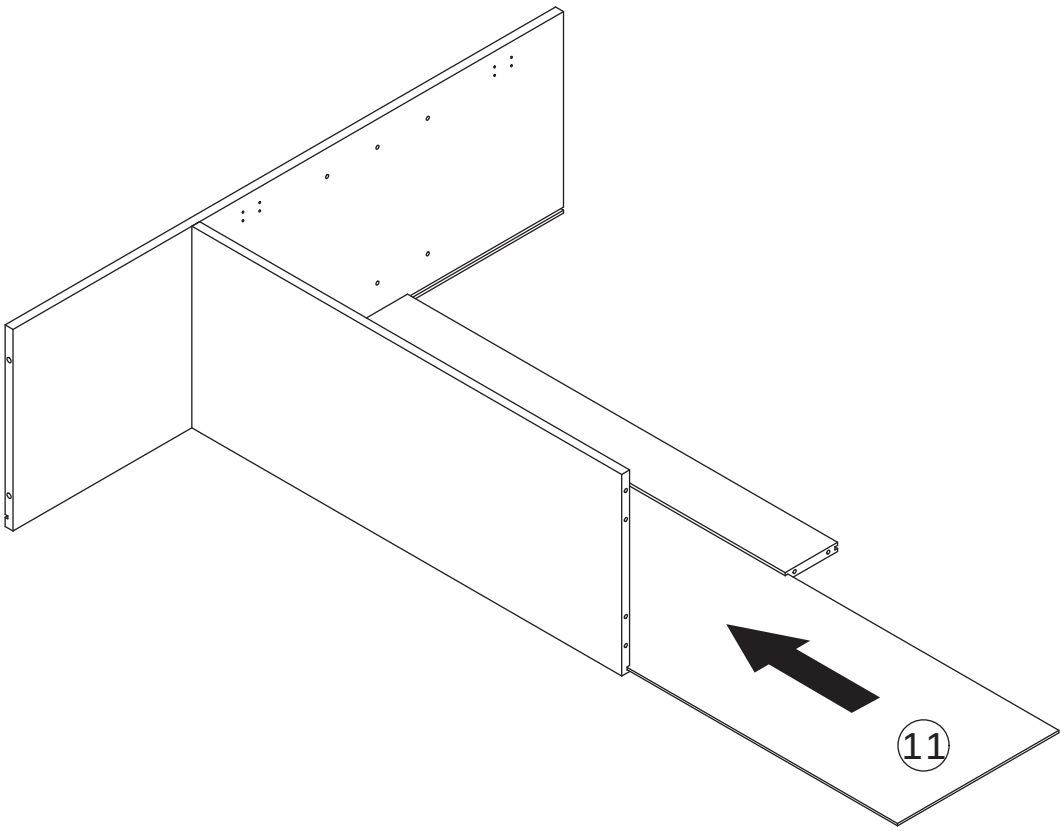

Insert plate 11 along the available slots.

27

B x 4	U x 2	x 1	
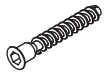			
M7 x 50 mm	∅6 x 30 mm		

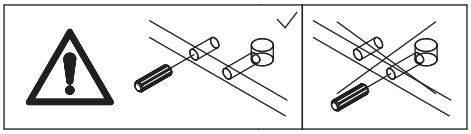

Connect plates 9 and 12 to plate 5 using wooden dowel (U), and secure them with screw (B).

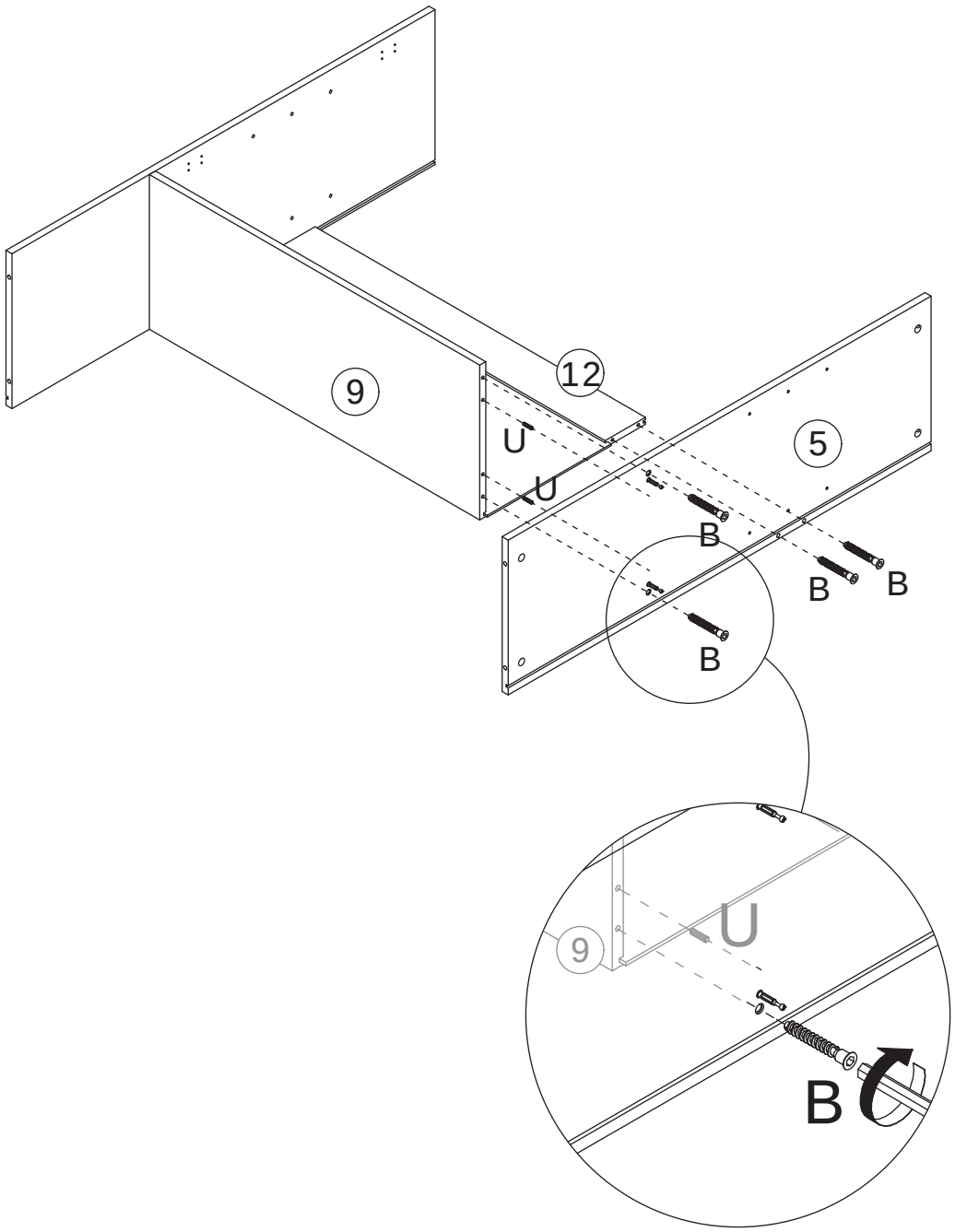

28

Insert plate 11 along the available slots.

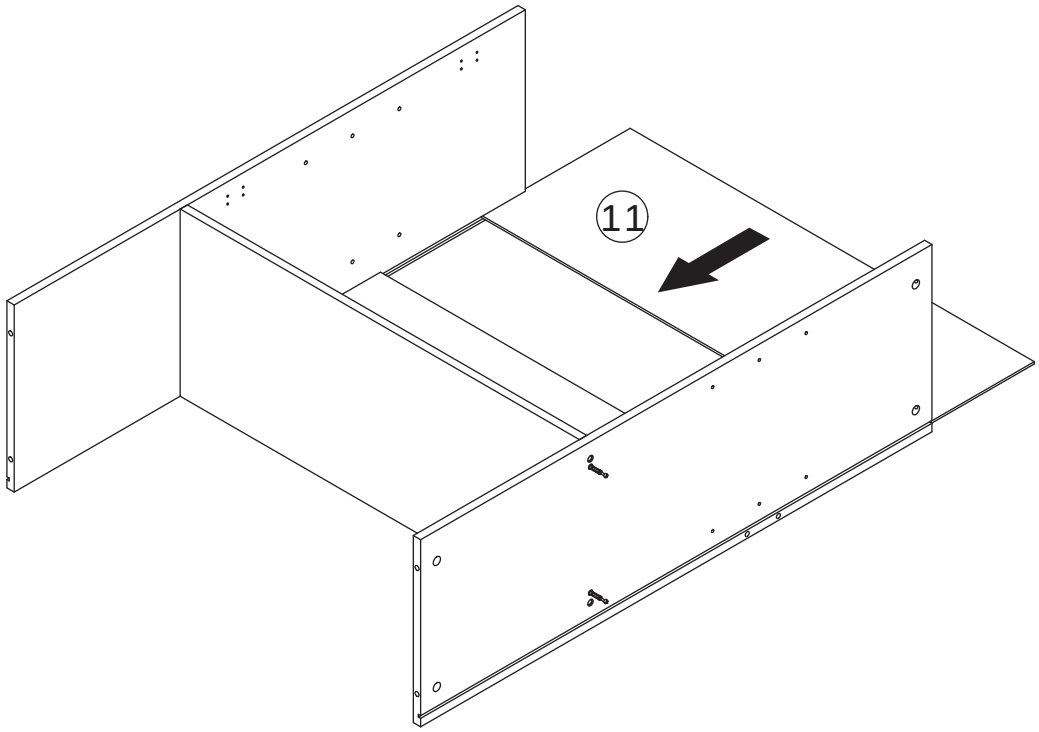

29

C x 4



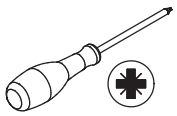

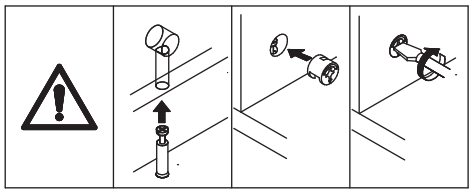

Connect plate 8 to plates 4 and 5, then tighten by turning eccentric wheel (C) clockwise.

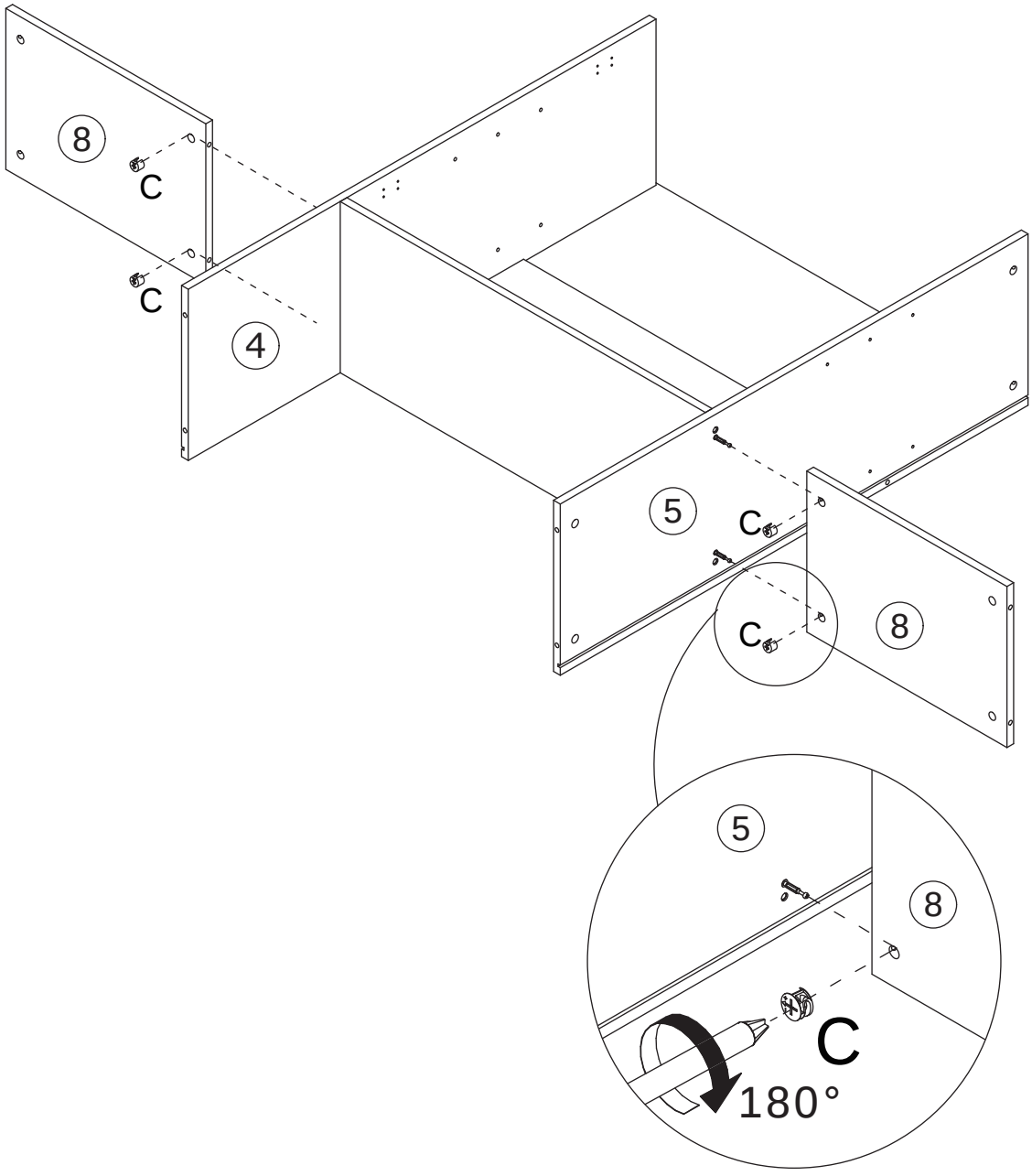

30

C x 4



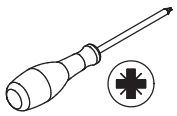

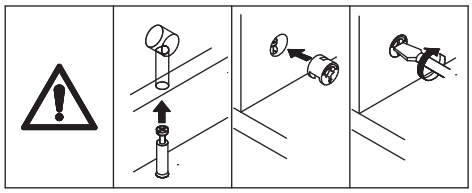

Connect plates 2 and 3 to plate 8, then tighten by turning eccentric wheel (C) clockwise.

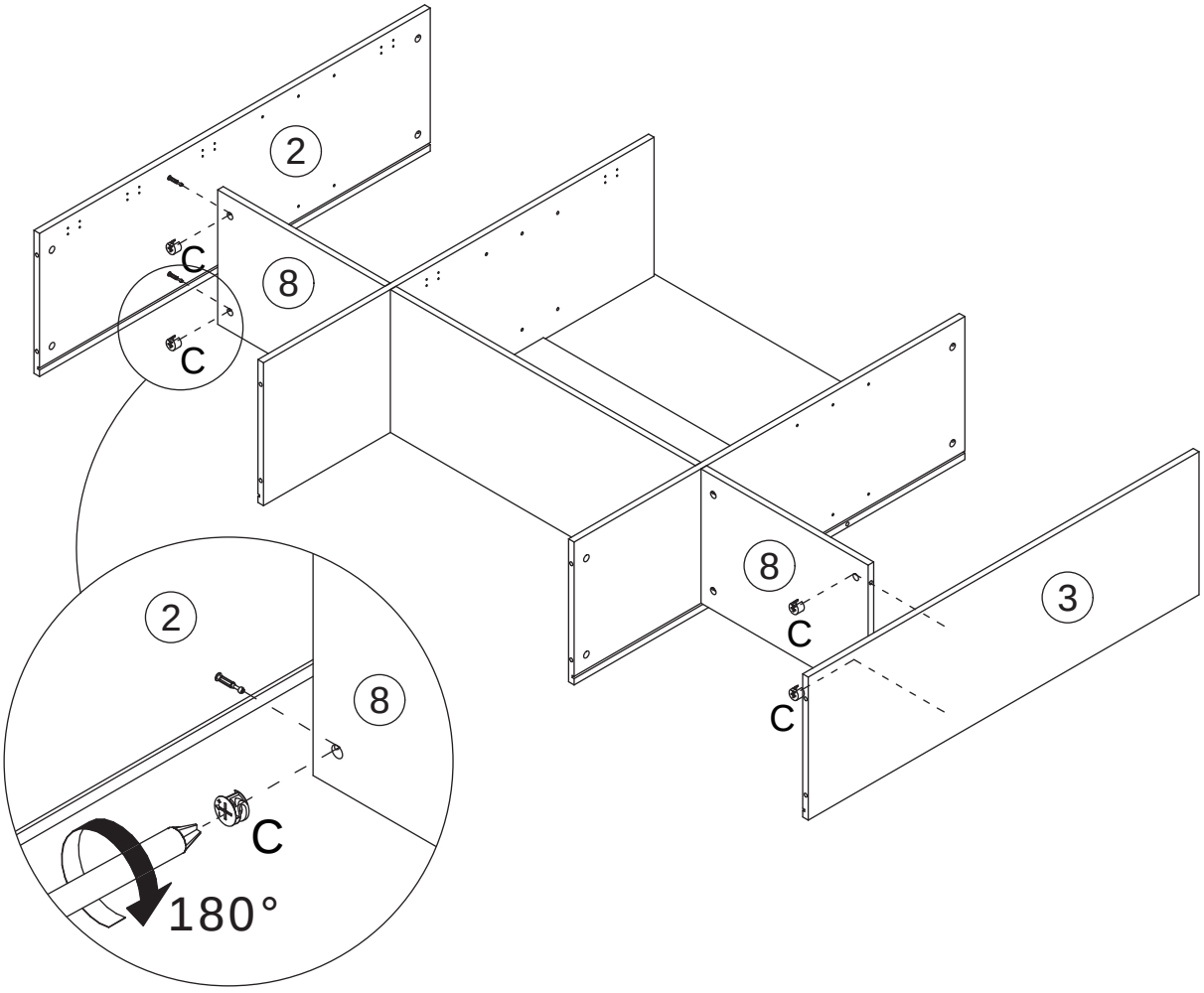

31

C x 8



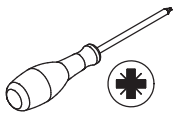

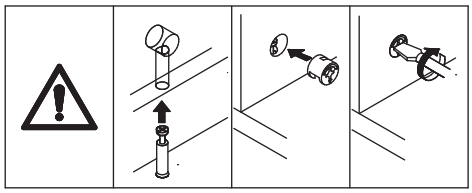

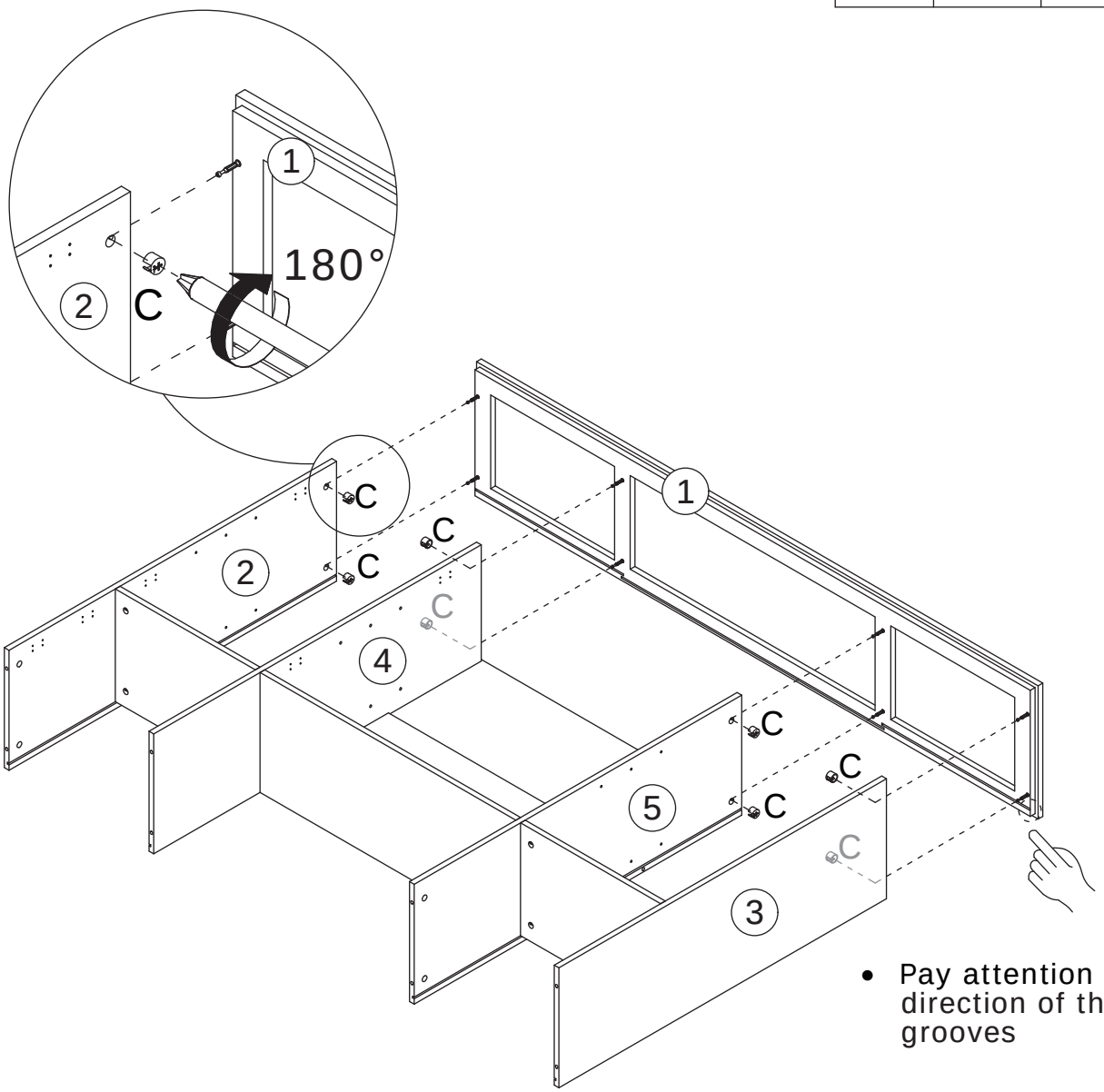

- Pay attention to the direction of the holes/ grooves

Connect plate 1 to plates 2, 3, 4, and 5, then tighten by turning eccentric wheel (C) clockwise.

32

M x 20

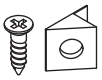

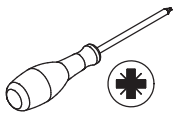

Insert plate 10 along the available slots.
Insert clip (M) into the backplate slots and secure them.

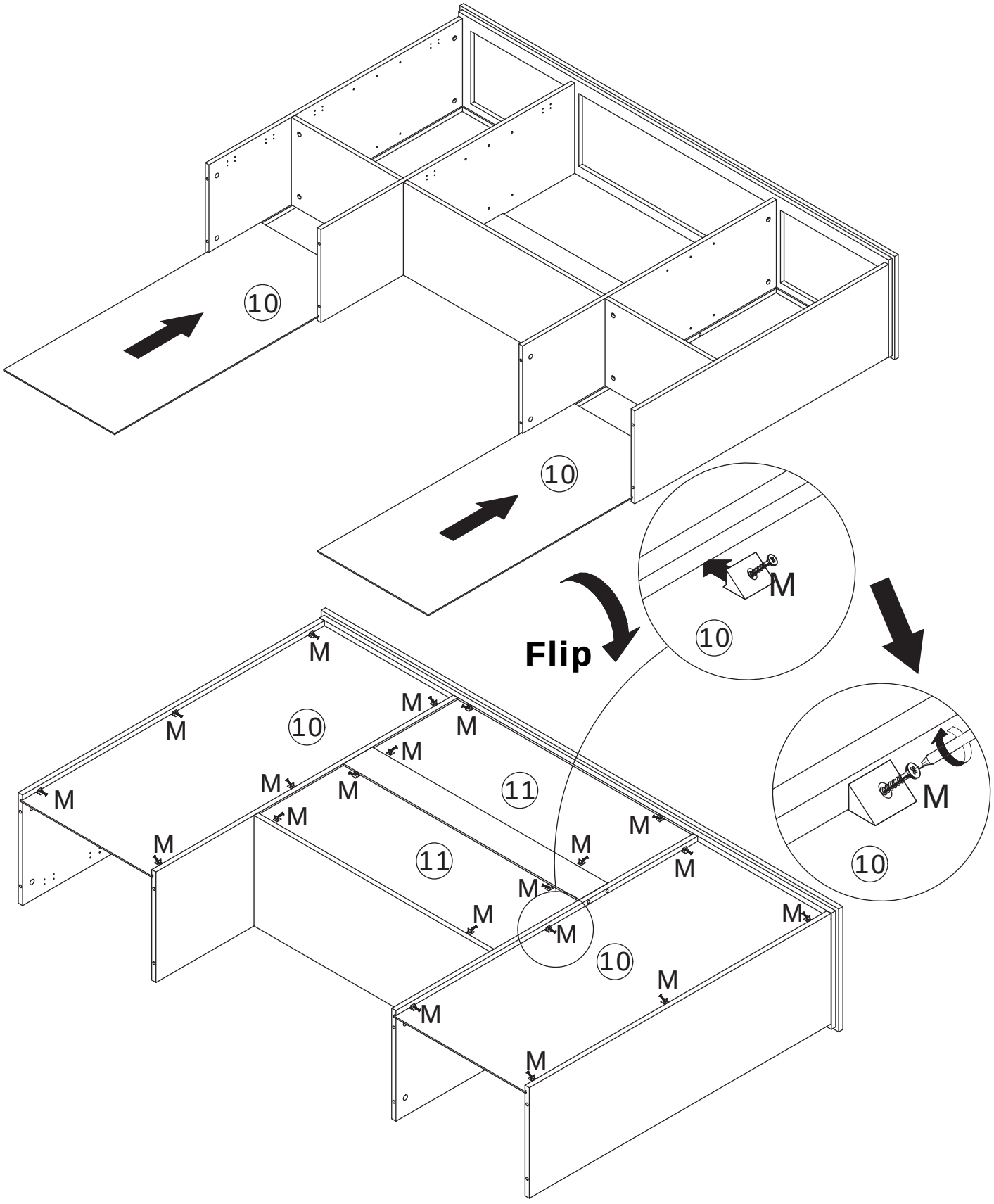
10
10
Flip
M
10
M
M
M

33

C x 8



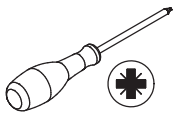

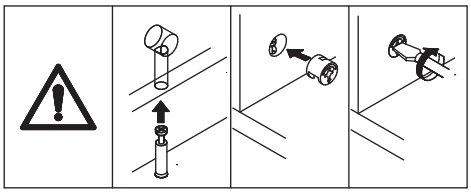

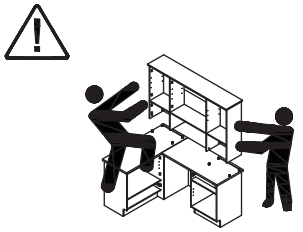

This step requires
2-4 people to install.

Connect plates 2, 3, 4, and 5 to plates 13 and 14, then tighten by turning eccentric wheel (C) clockwise.

The middle is easy to break, pay attention to balance when lifting.

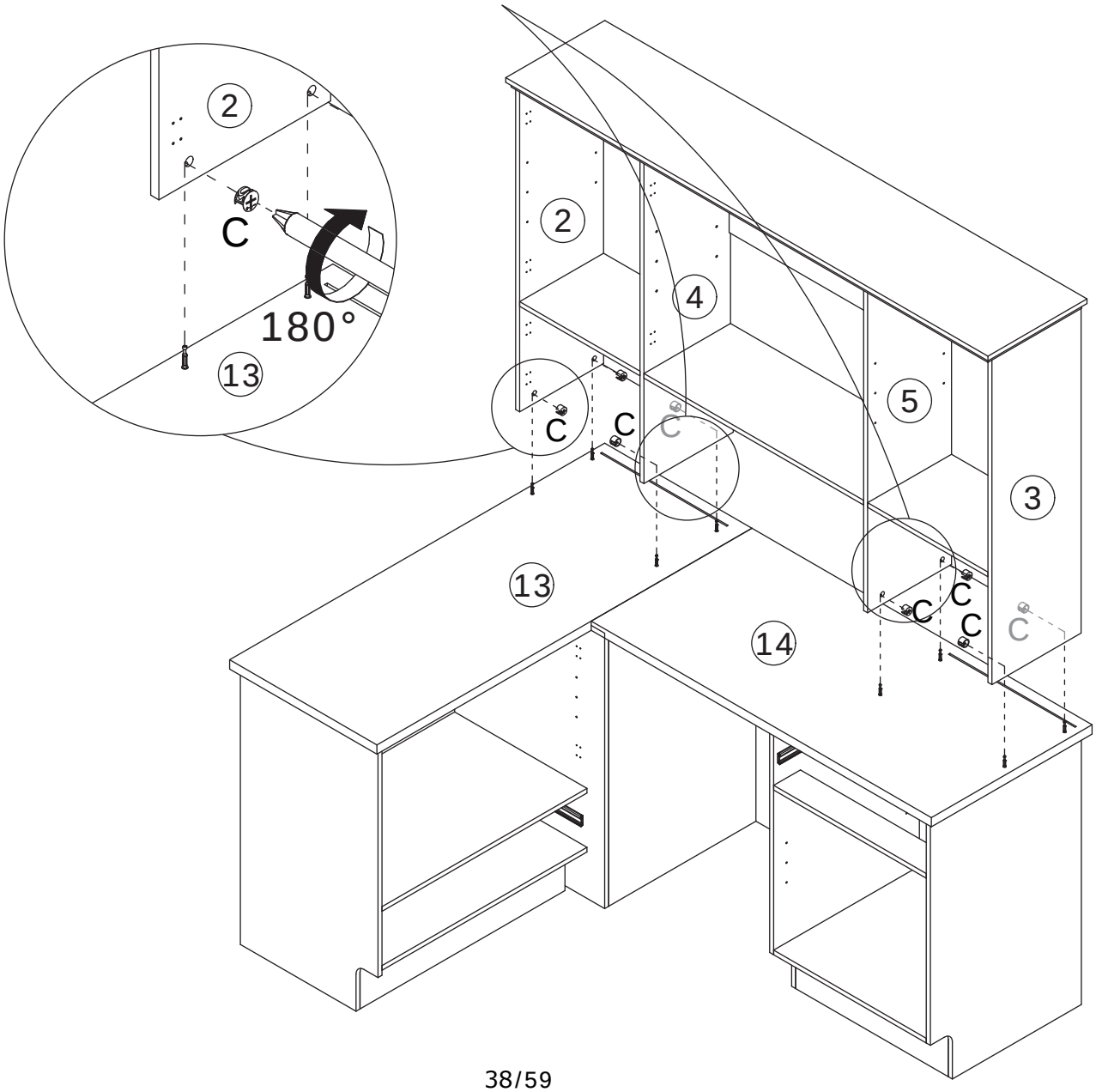

34

A x 10

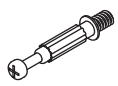

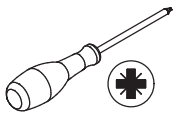

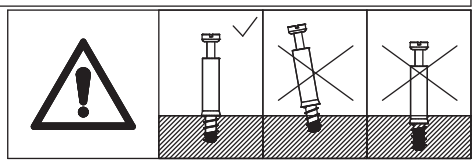

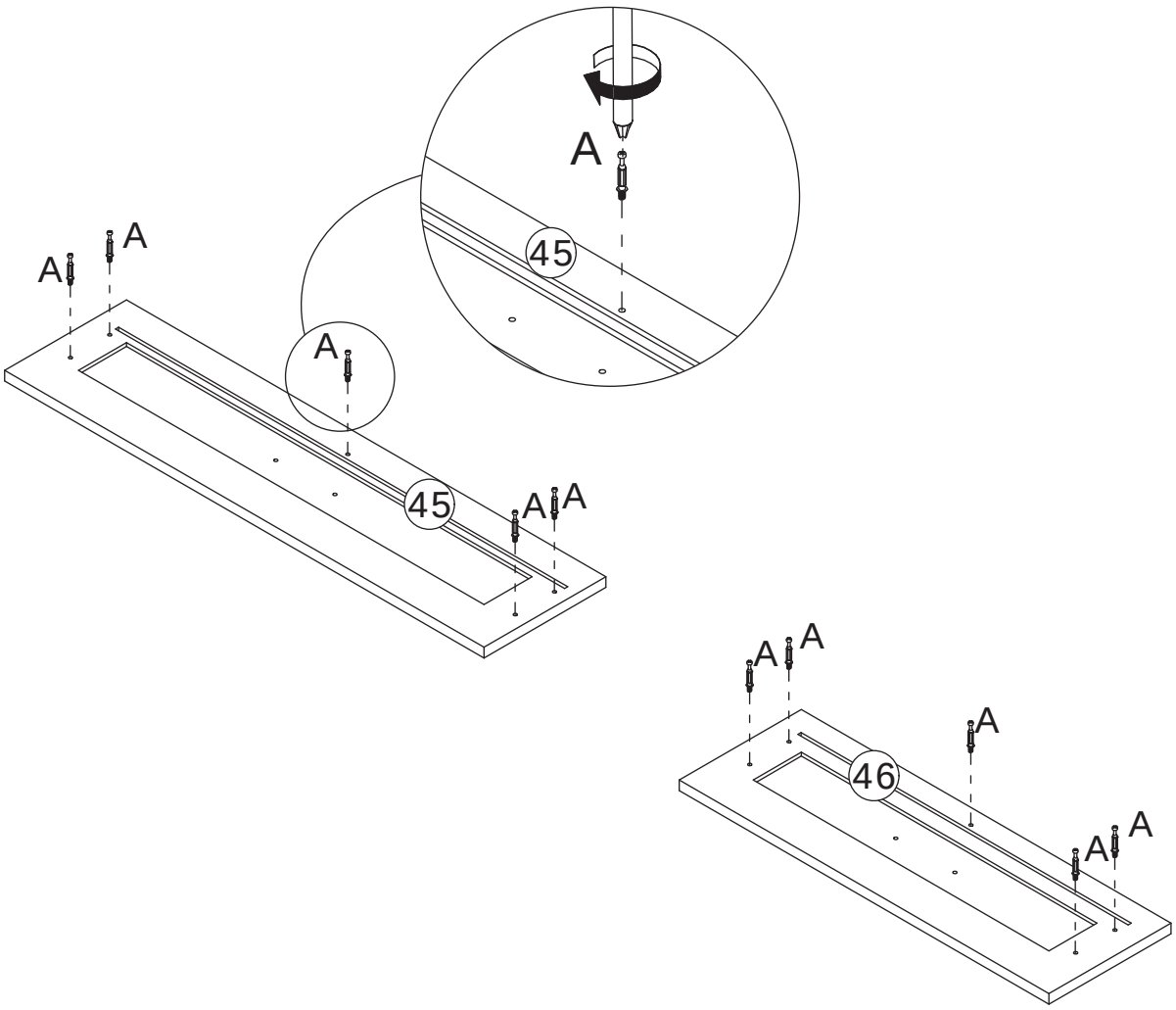

Screw eccentric rod (A) onto plates 45 and 46.

35

P x 4



ST3.5 x 12 mm

X x 1

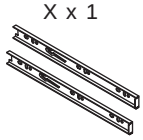

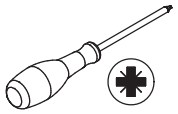

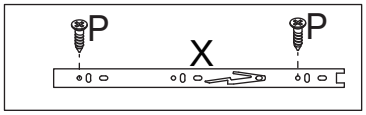

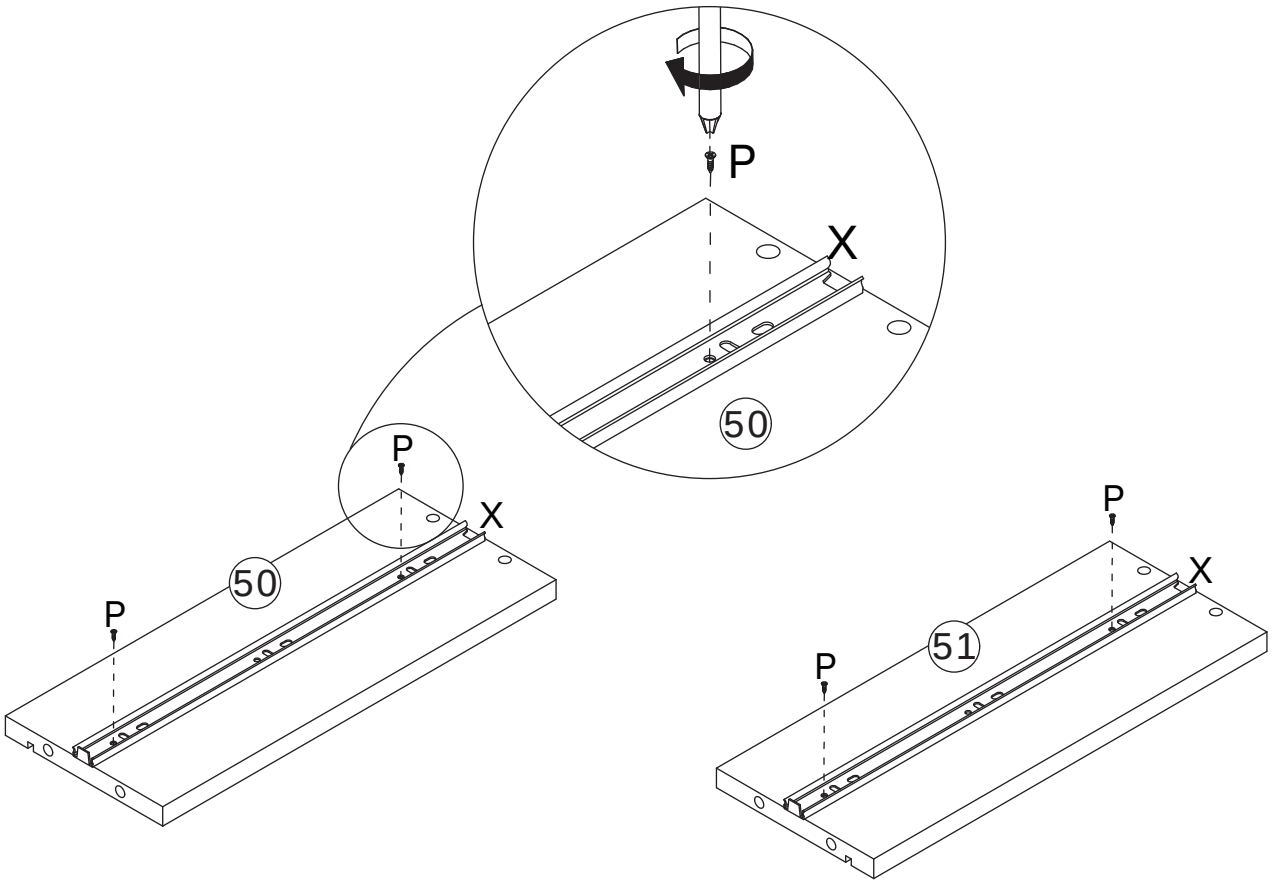

Secure slide rail (X) to plates 50 and 51 using screw (P).

36

B x 5	x 1	
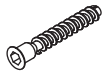 M7 x 50 mm		

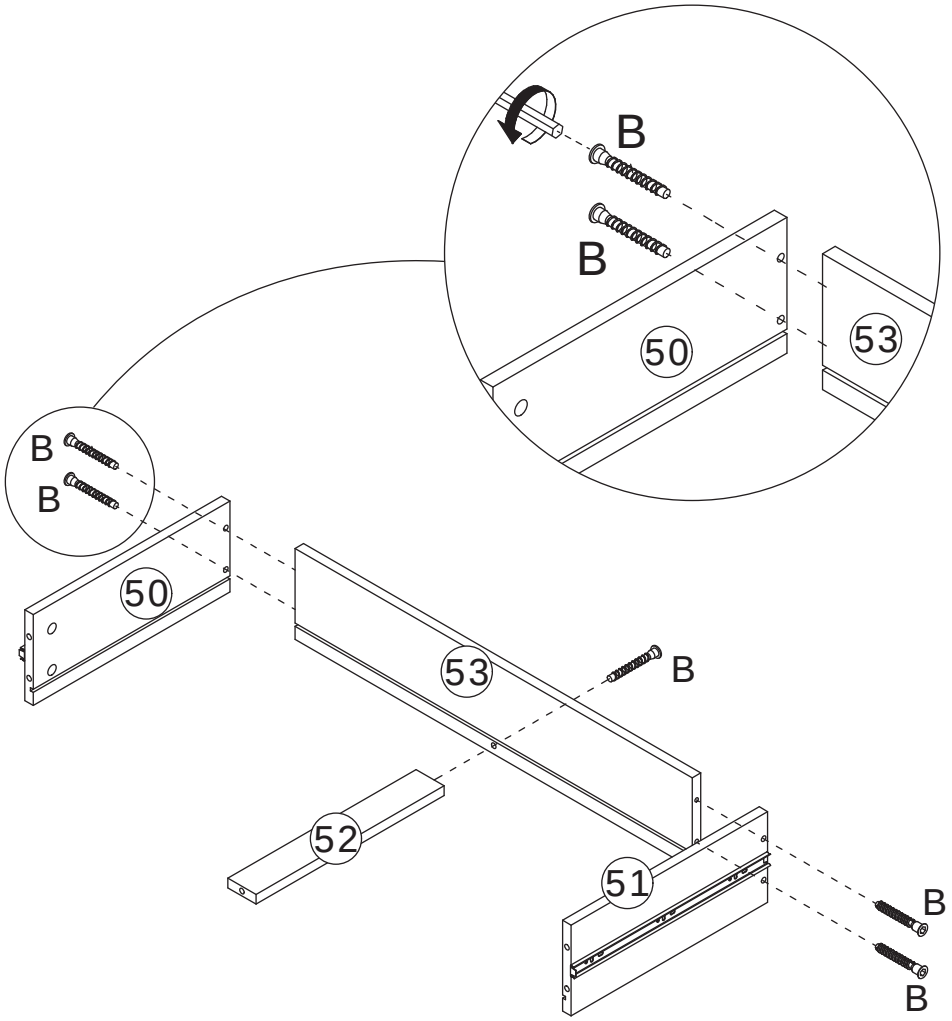

Connect plates 50, 51, and 52 to plate 53, and secure them with screw (B).

37

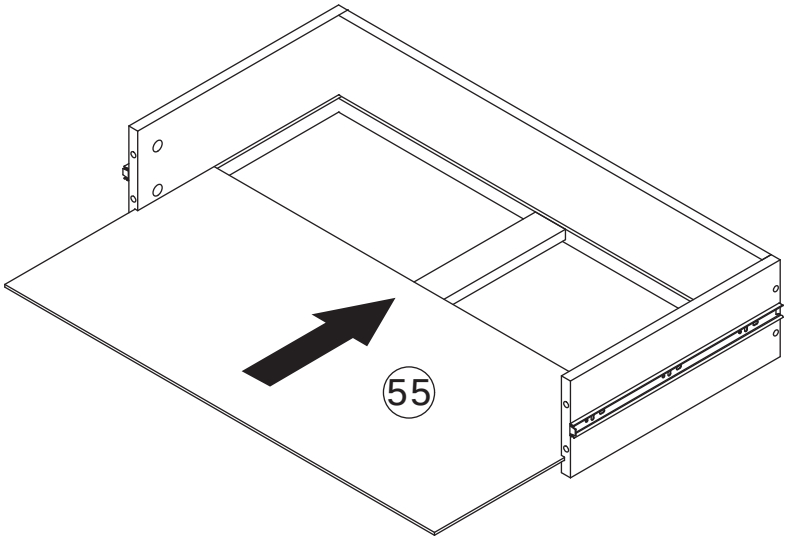

Insert plate 55 along the available slots.

38

C x 5	O x 1	Q x 2	
	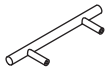	 M4 x 8 mm	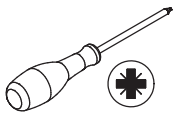

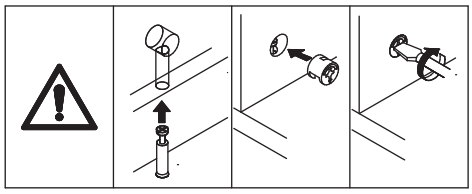

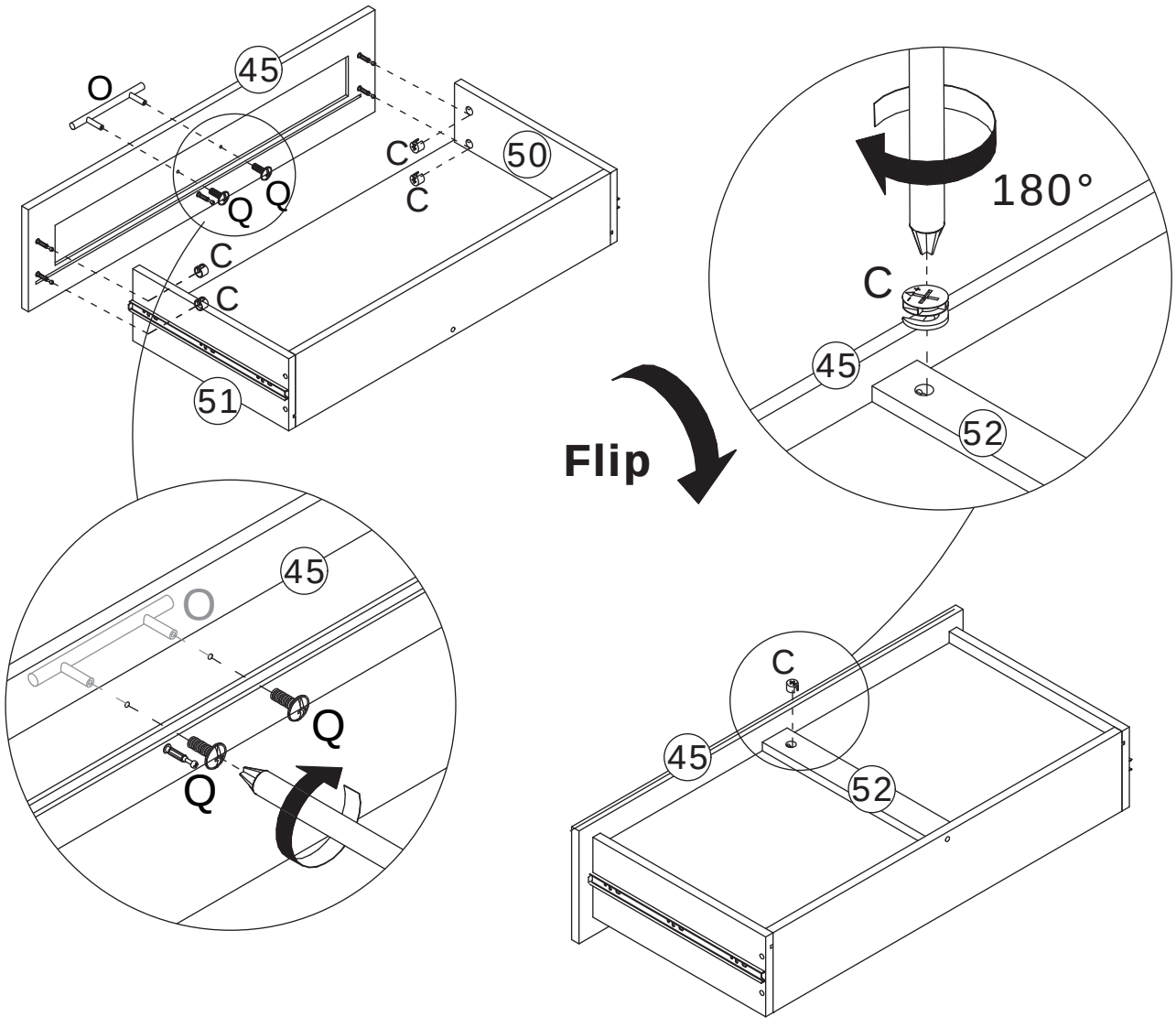

Secure handle (O) to plate 45 using screw (Q).
Connect plates 50, 51, and 52 to plate 45, then tighten by turning eccentric wheel (C) clockwise.

39

P x 4



ST3.5 x 12 mm

X x 1

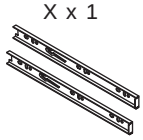

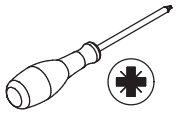

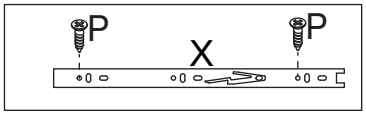

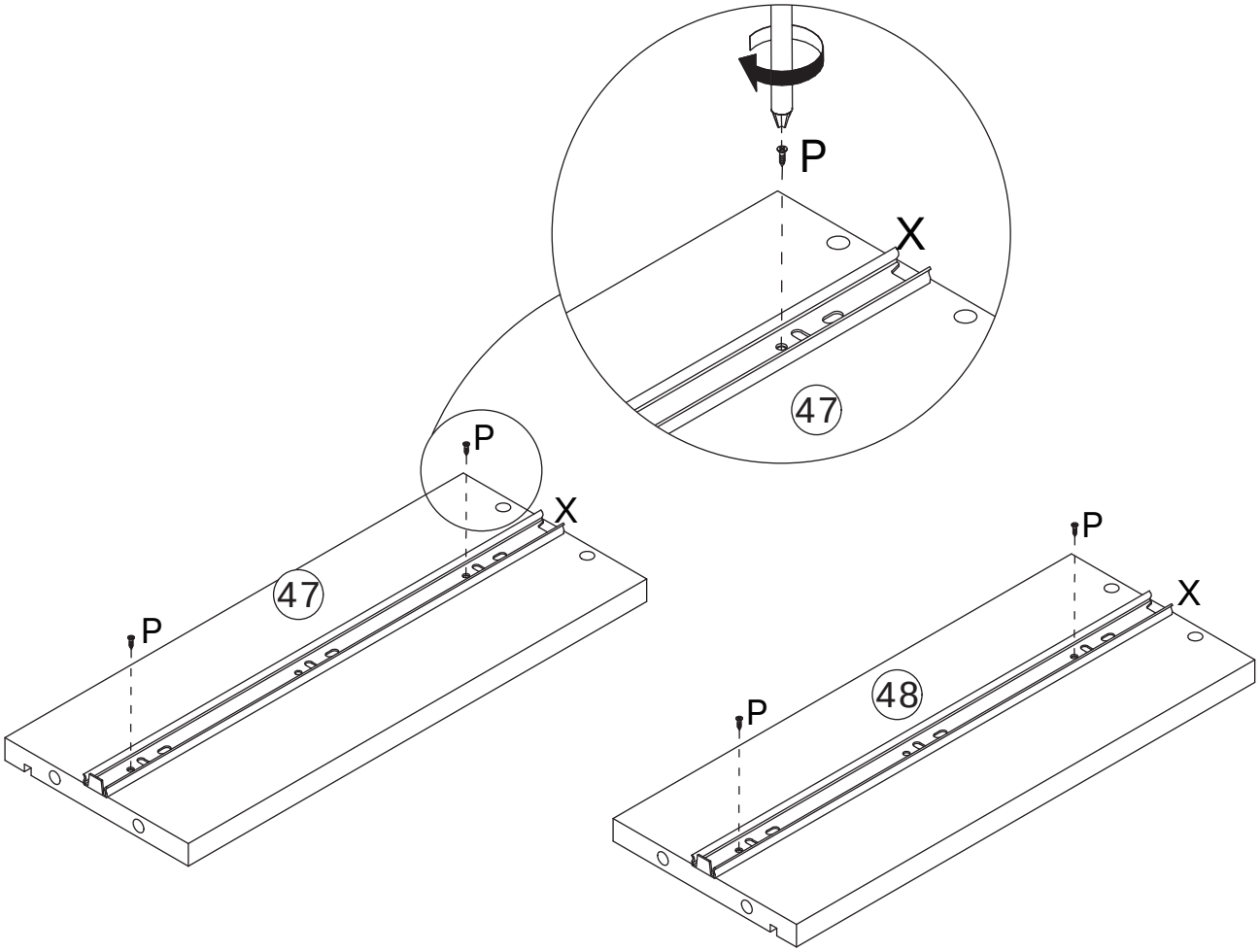

Secure slide rail (X) to plates 47 and 48 using screw (P).

40

B x 5	x 1	
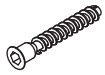 M7 x 50 mm		

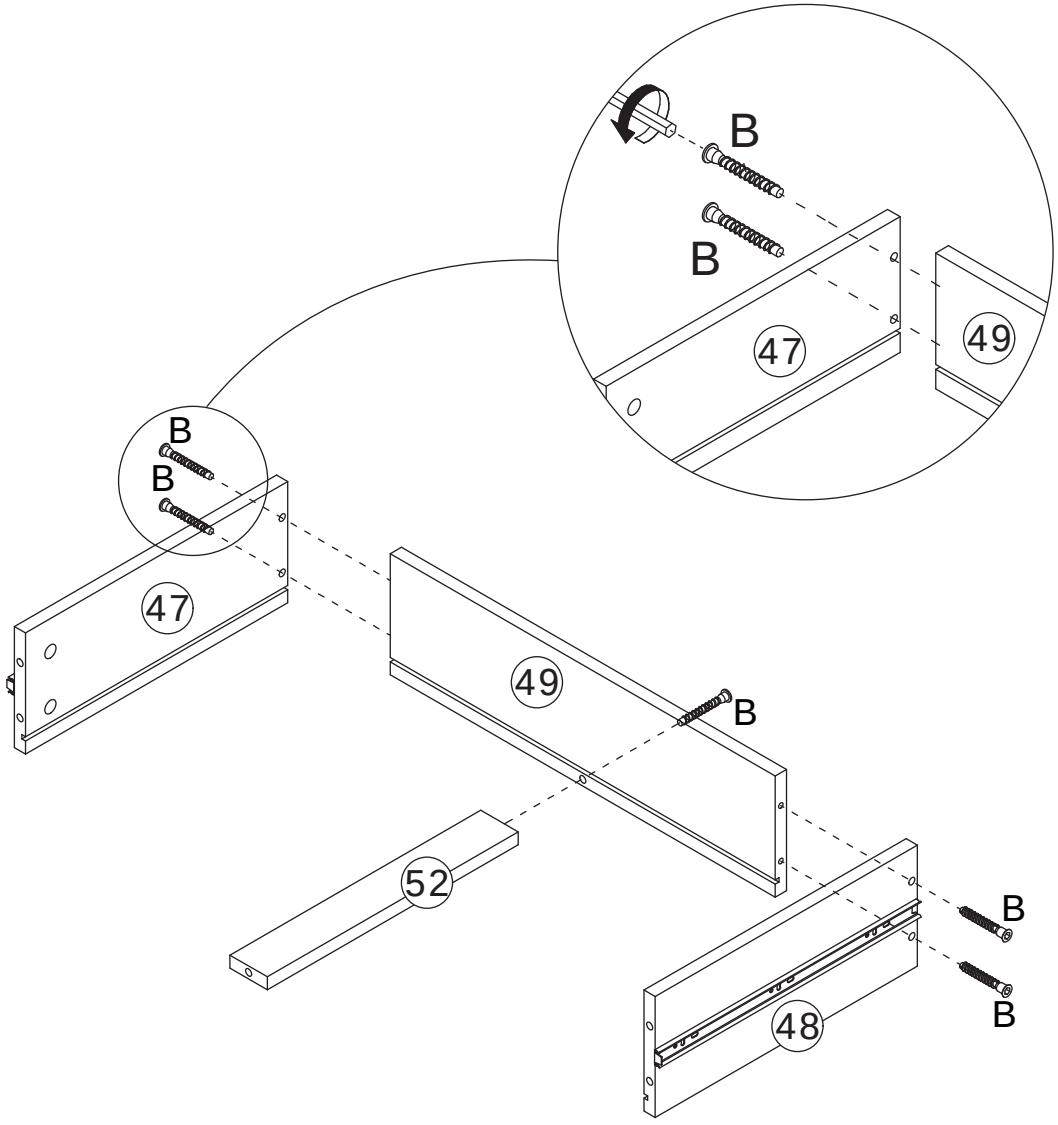

Connect plates 47, 48, and 52 to plate 49, and secure them with screw (B).

41

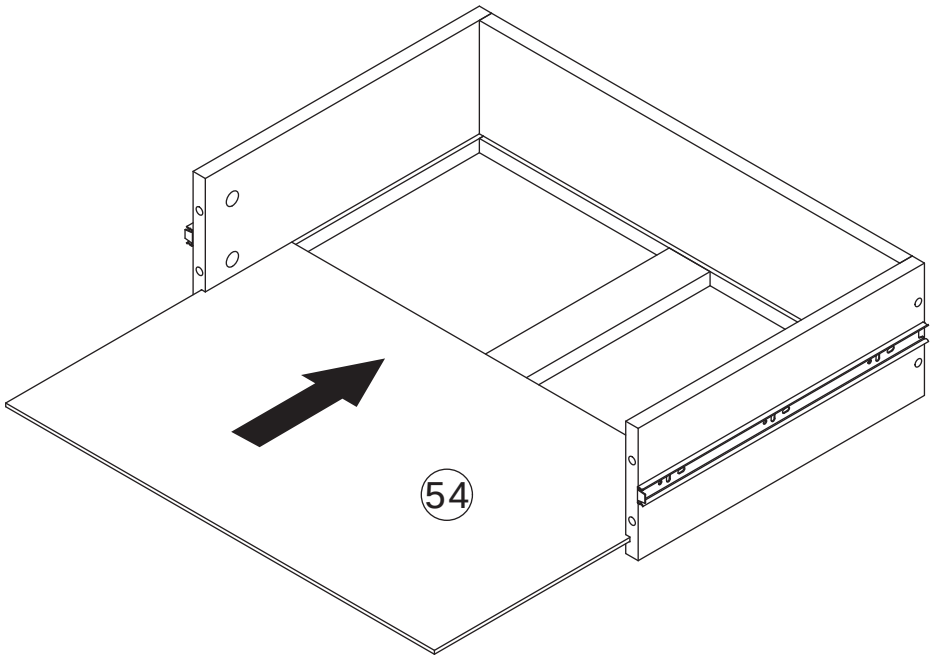

Insert plate 54 along the available slots.

42

C x 5	O x 1	Q x 2	
	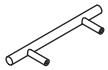	 M4 x 8 mm	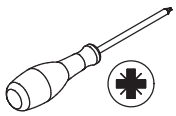

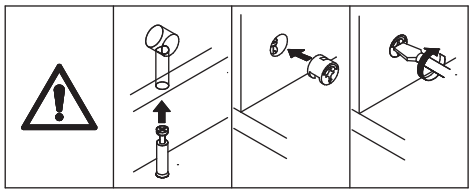

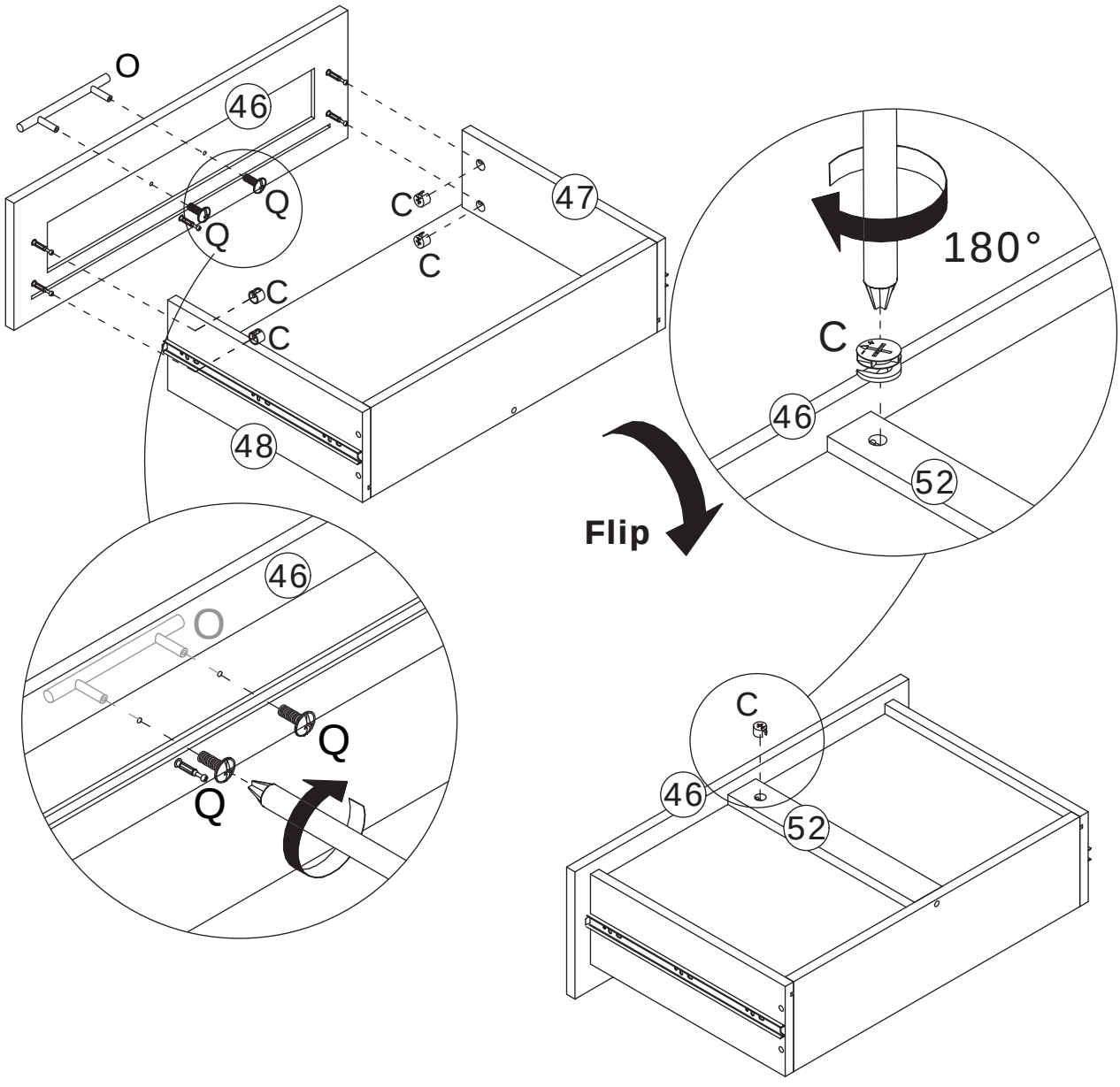

Secure handle (O) to plate 46 using screw (Q).
Connect plates 47, 48, and 52 to plate 46, then tighten by turning eccentric wheel (C) clockwise.

43

Install the drawers as shown.

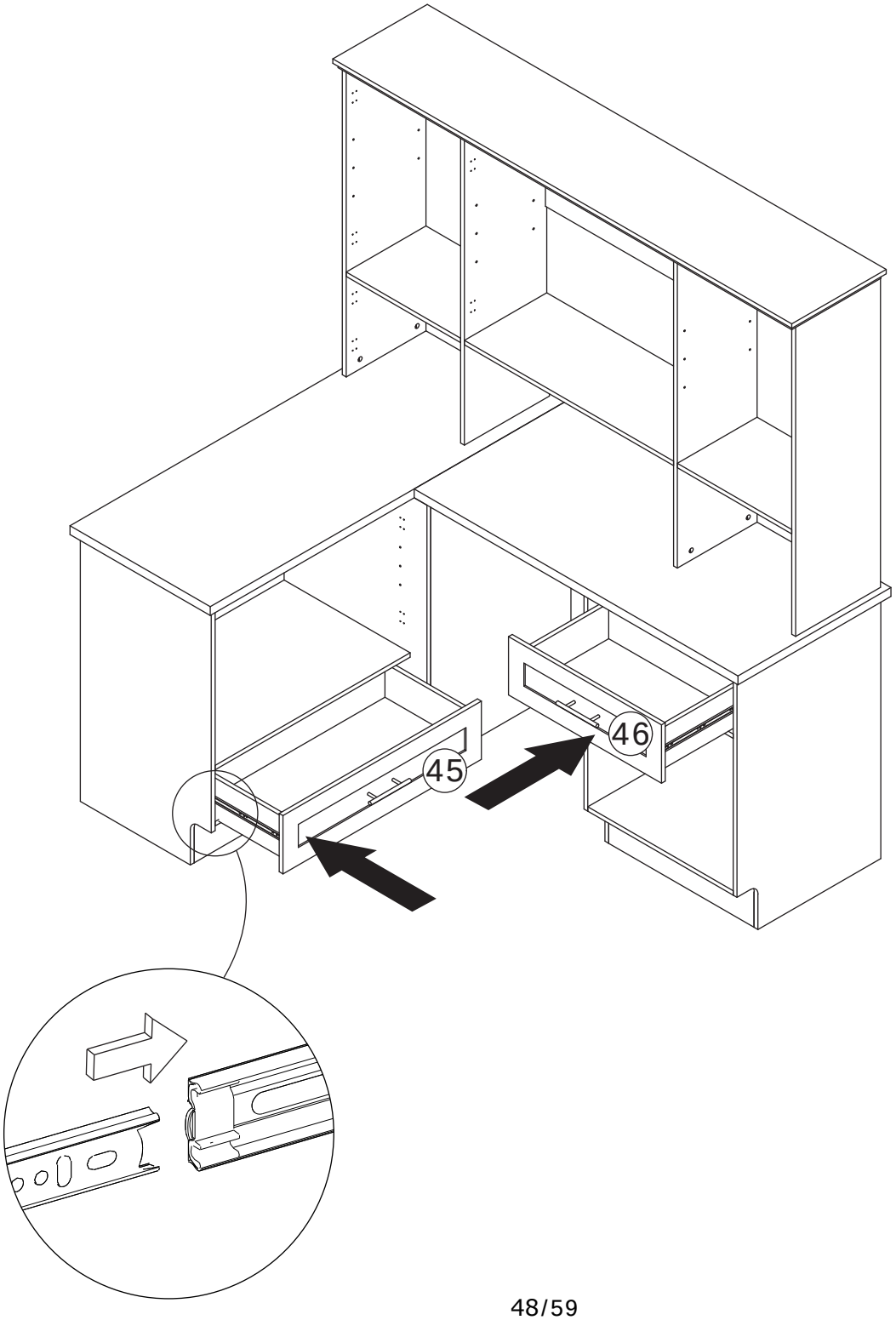

44

W x 20



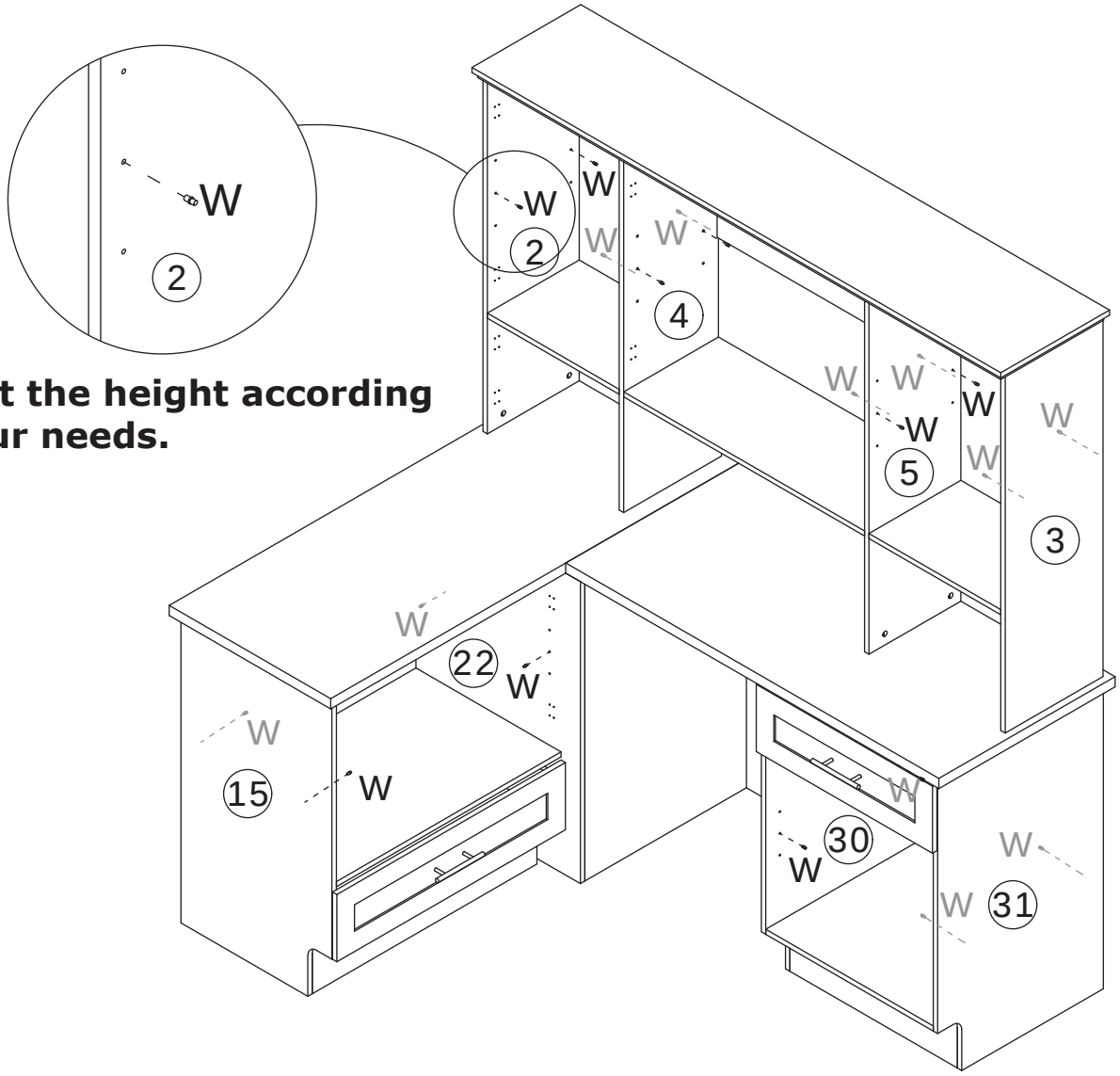

Adjust the height according to your needs.

Install pin (W) on plates 2, 3, 4, 5, 15, 22, 30, and 31.

45

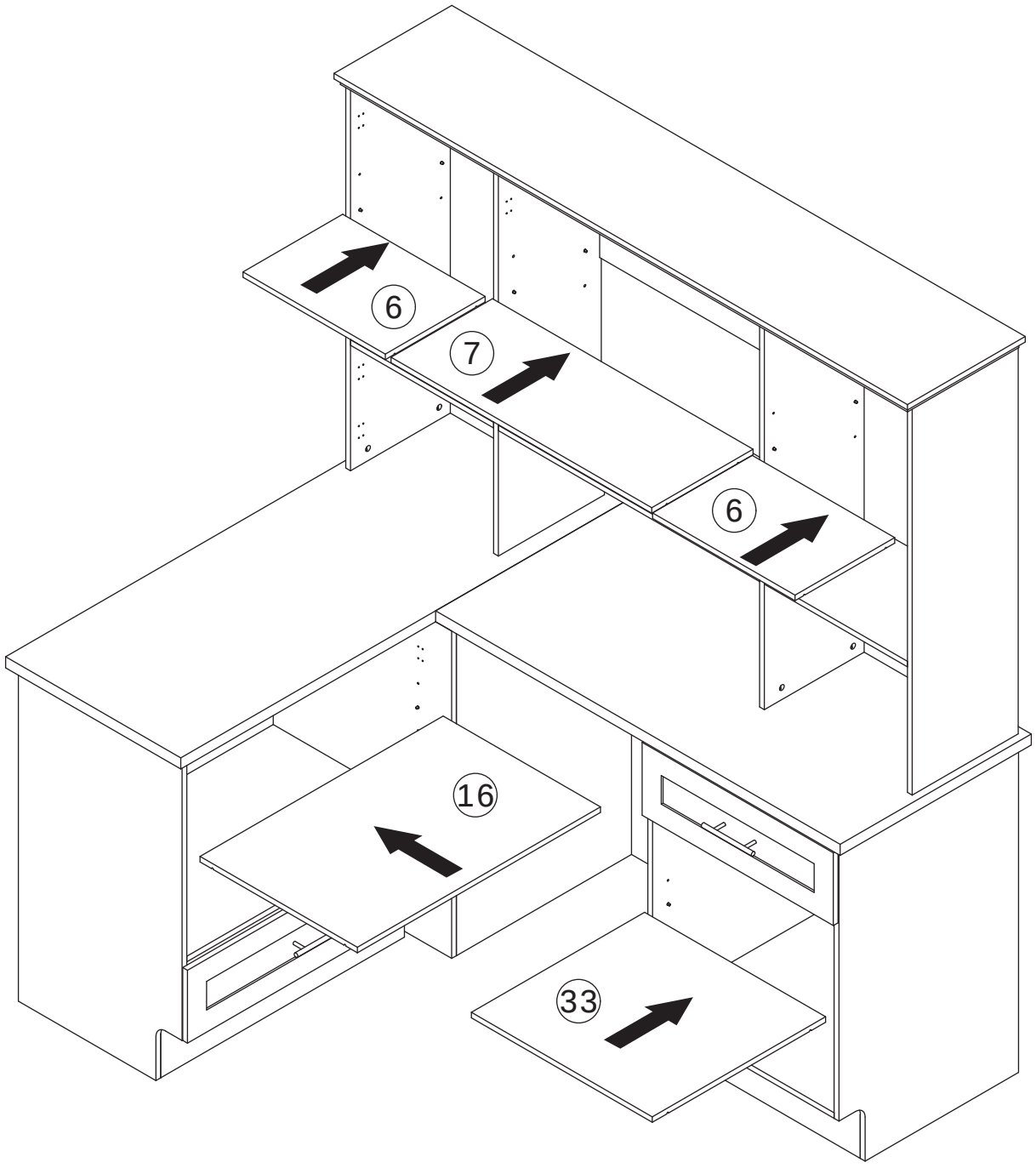

Place plates 6, 7, 16, and 33 into the cabinet.

46

P x 12	O x 3	R x 6	T x 6	
 ST3.5 x 12 mm	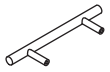			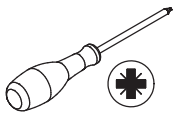

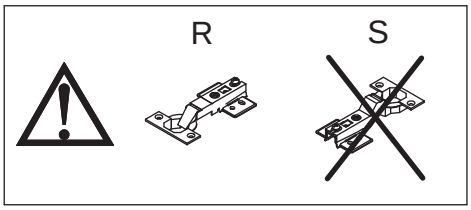

Secure hinge (R) to plates 36, 40, and 42 using screw (P).
Secure handle (O) using screw (T).

47

P x 12	O x 3	R x 6	T x 6	
ST3.5 x 12 mm				

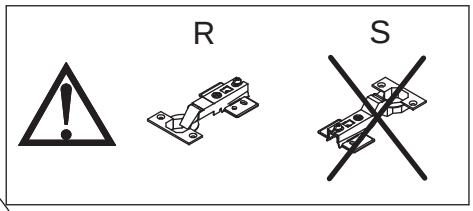

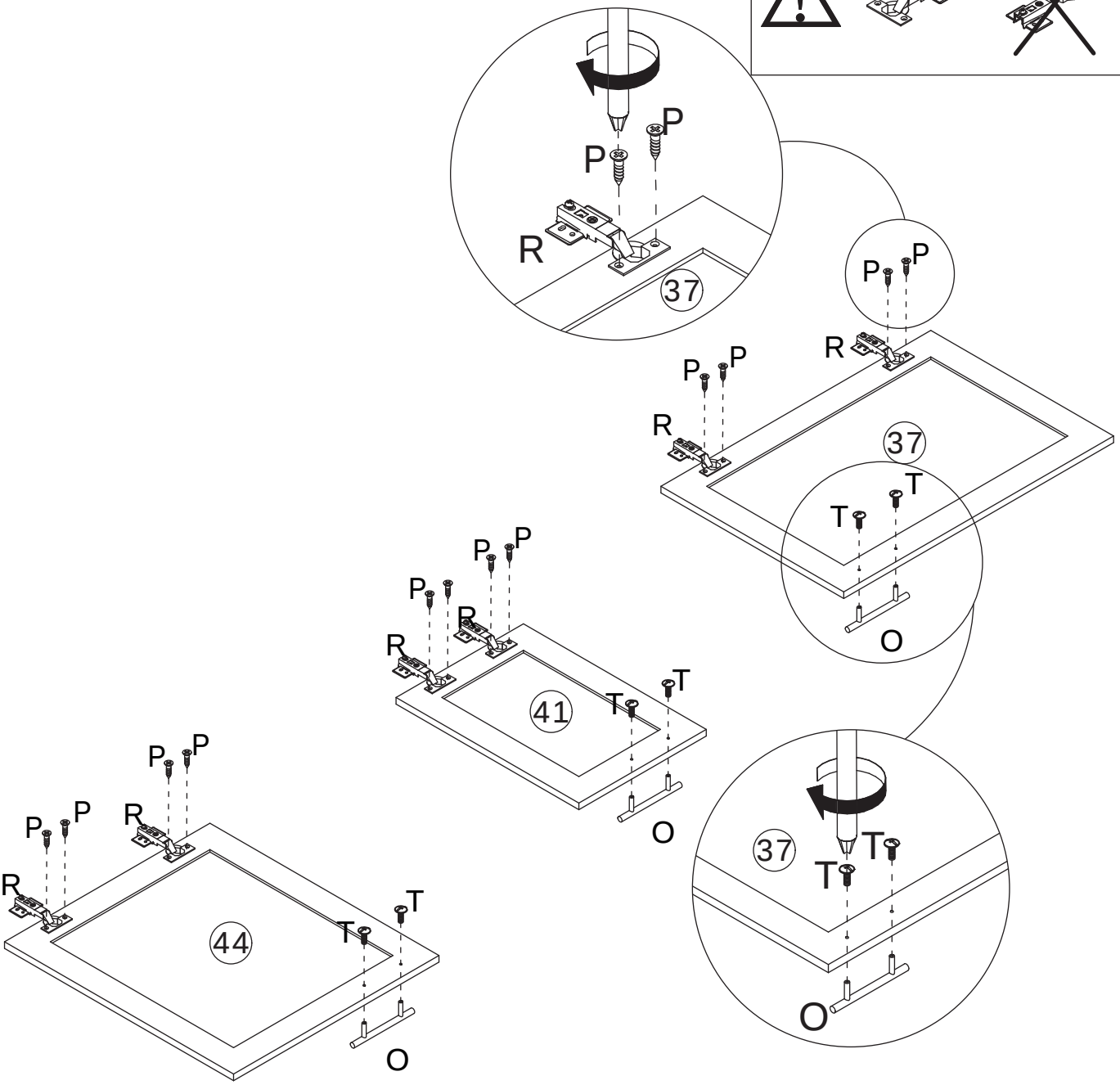

Secure hinge (R) to plates 37, 41, and 44 using screw (P).
Secure handle (O) using screw (T).

48

P x 12	O x 3	S x 6	T x 6	
 ST3.5 x 12 mm	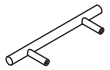	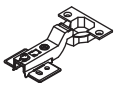		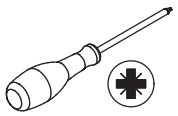

Secure **hinge (S)** to plates 38, 39, and 43 using screw (P).
Secure handle (O) using screw (T).

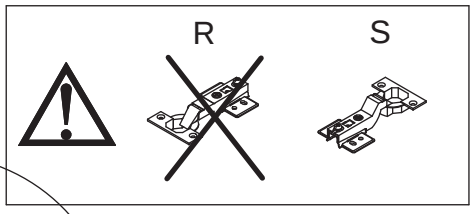

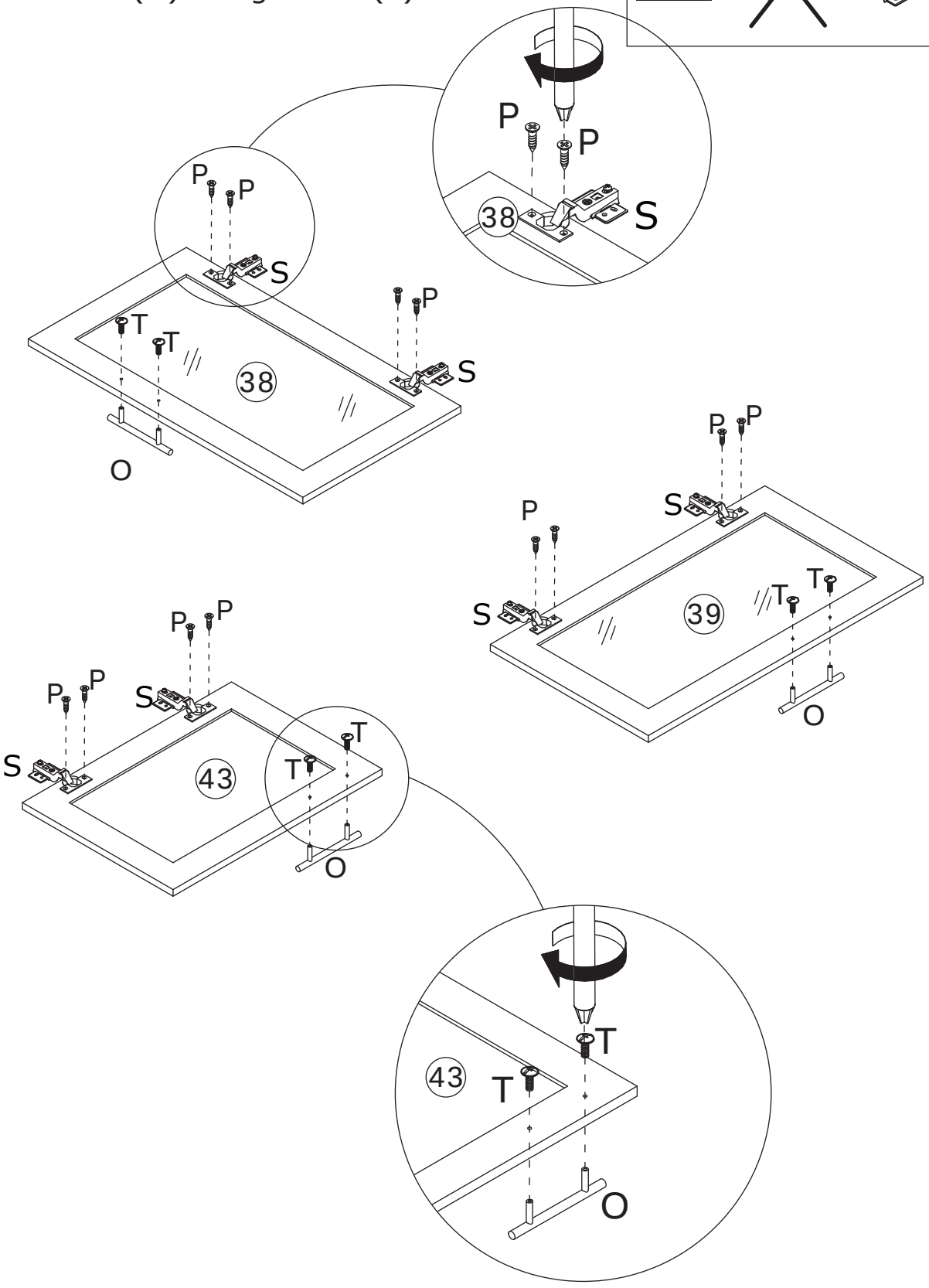

49

P x 40



ST3.5 x 12 mm

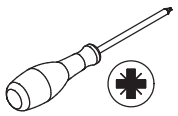

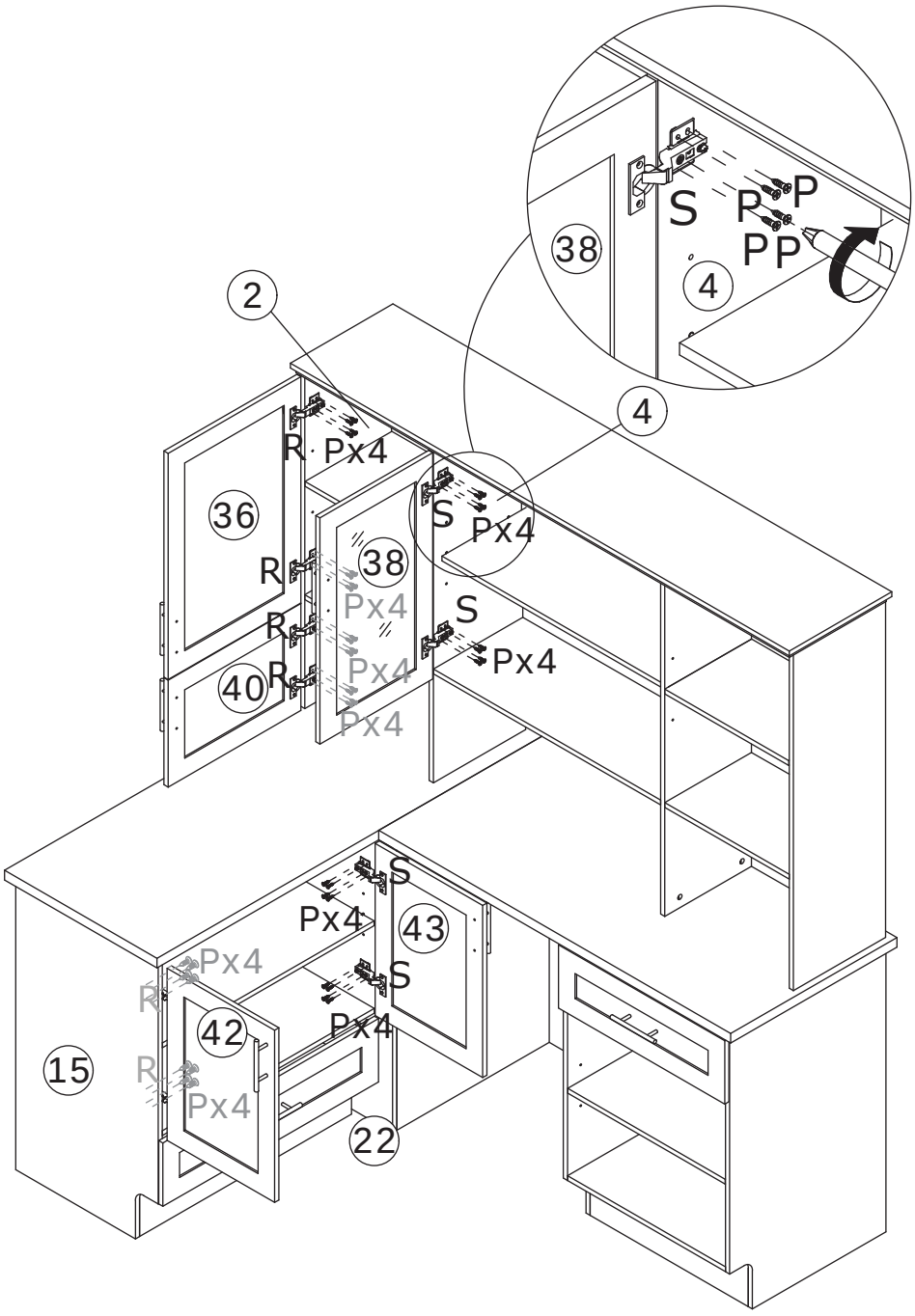

Connect plates 36, 40, 38, 42, and 43 to the unit via securing hinges using screw (P).

50

P x 32



ST3.5 x 12 mm

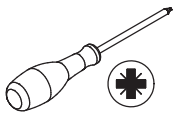

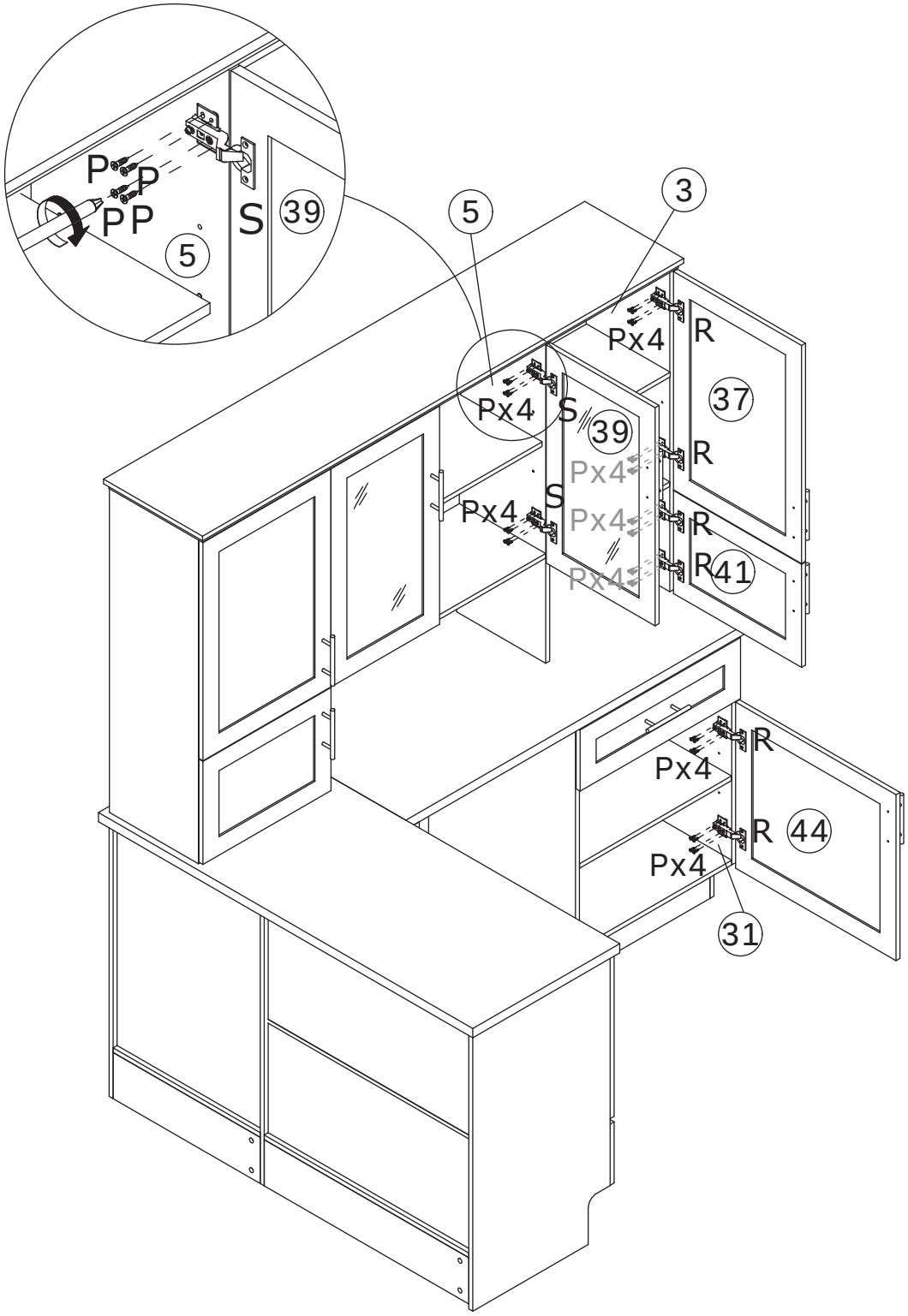

Connect plates 37, 39, 41, and 44 to the unit via securing hinges using screw (P).

52

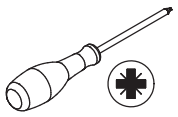

If the door panels are not aligned, please adjust the screws on the hinges according to the illustration.

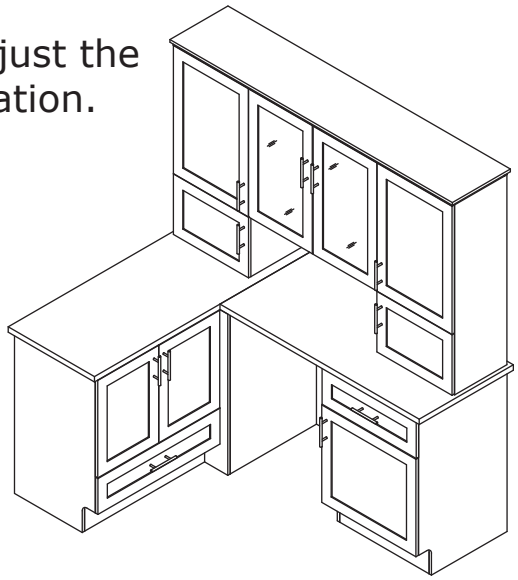

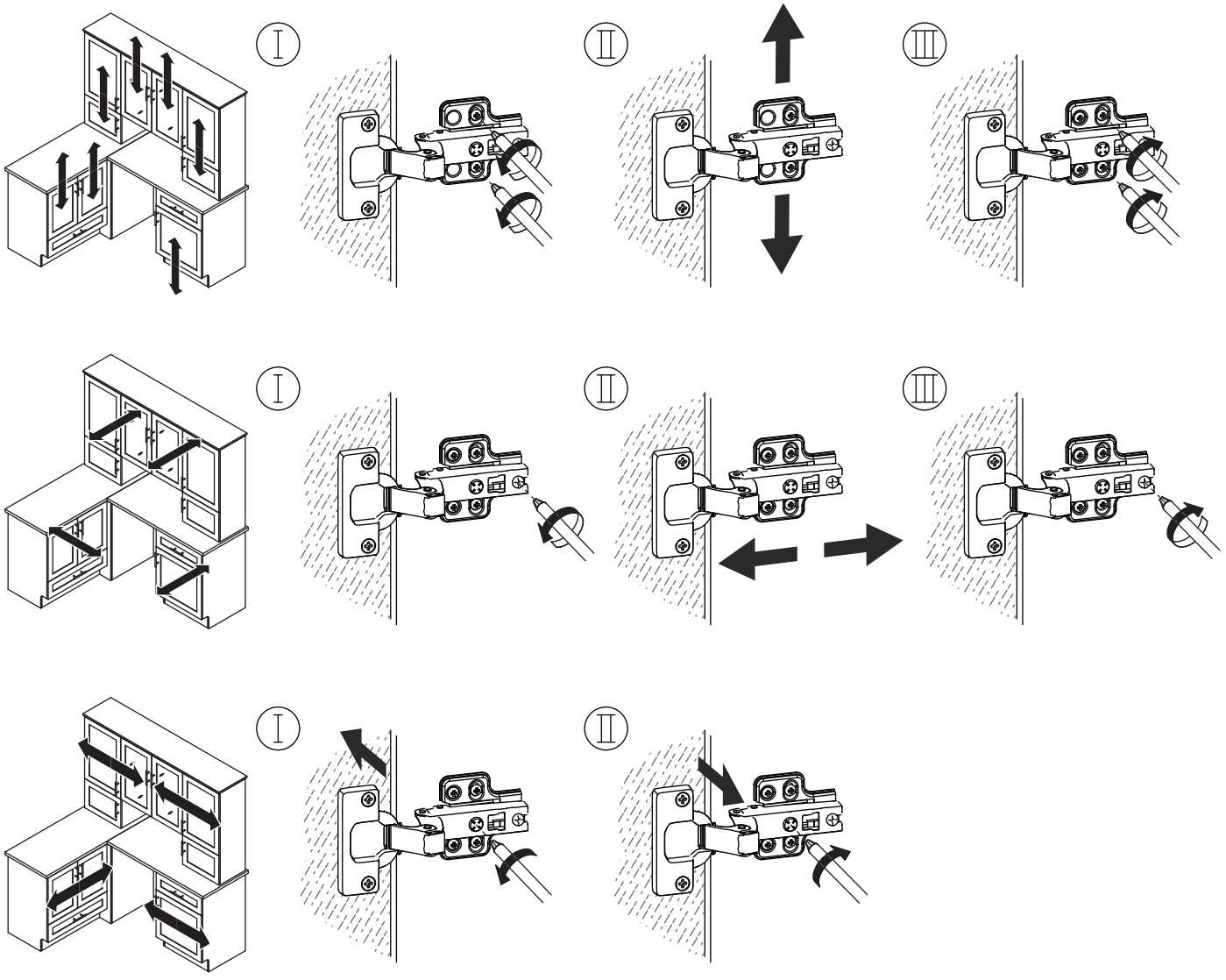

51

M x 16

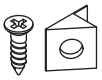

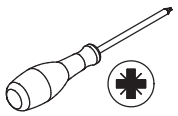

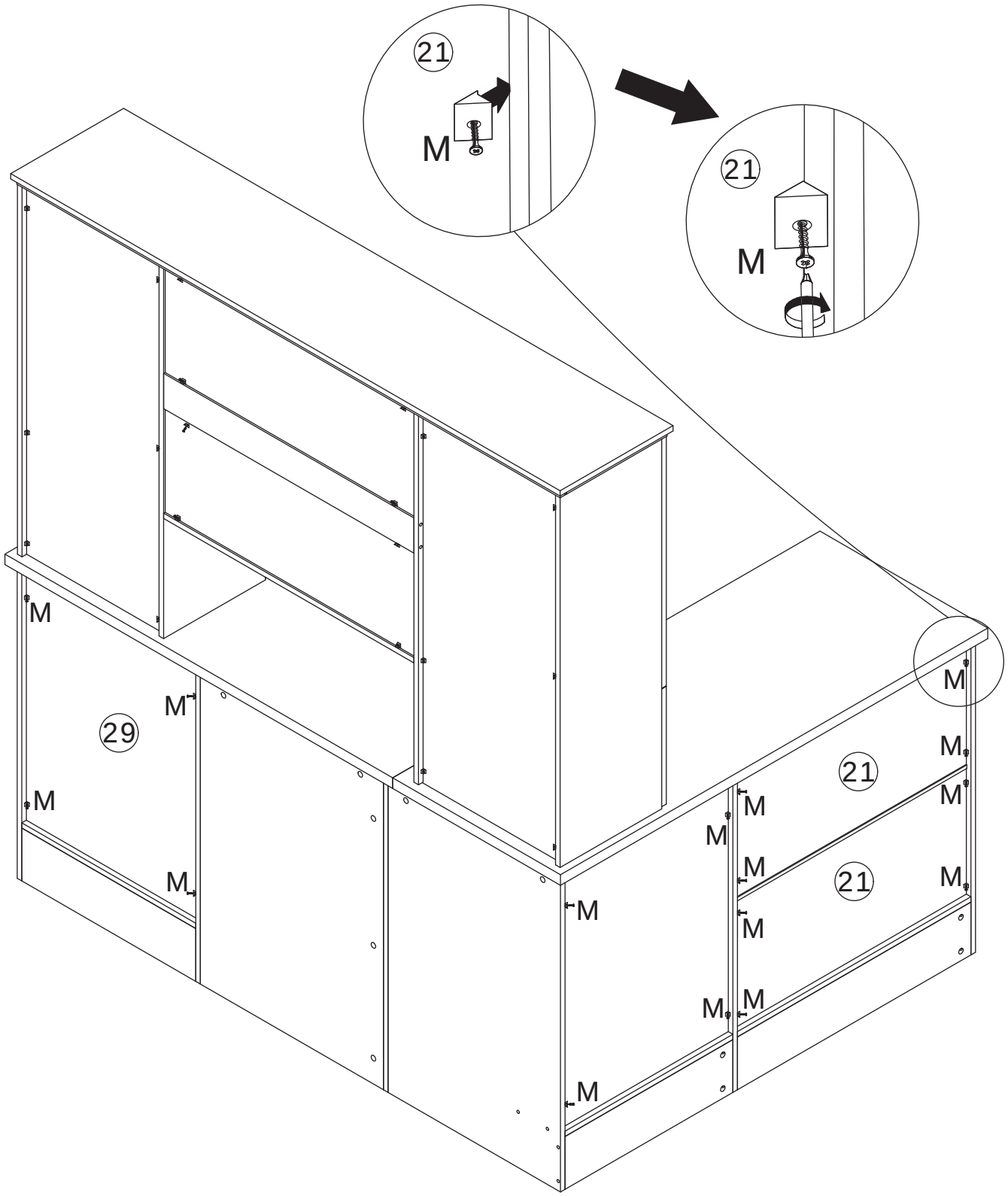

Insert clip (M) into the backplate slots and secure them.

51

V x 2	Y x 1	
 M4 x 20 mm	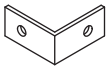	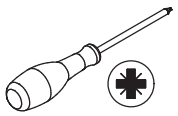

Secure fitting (Y) to plates 13 and 14 using screws (V).

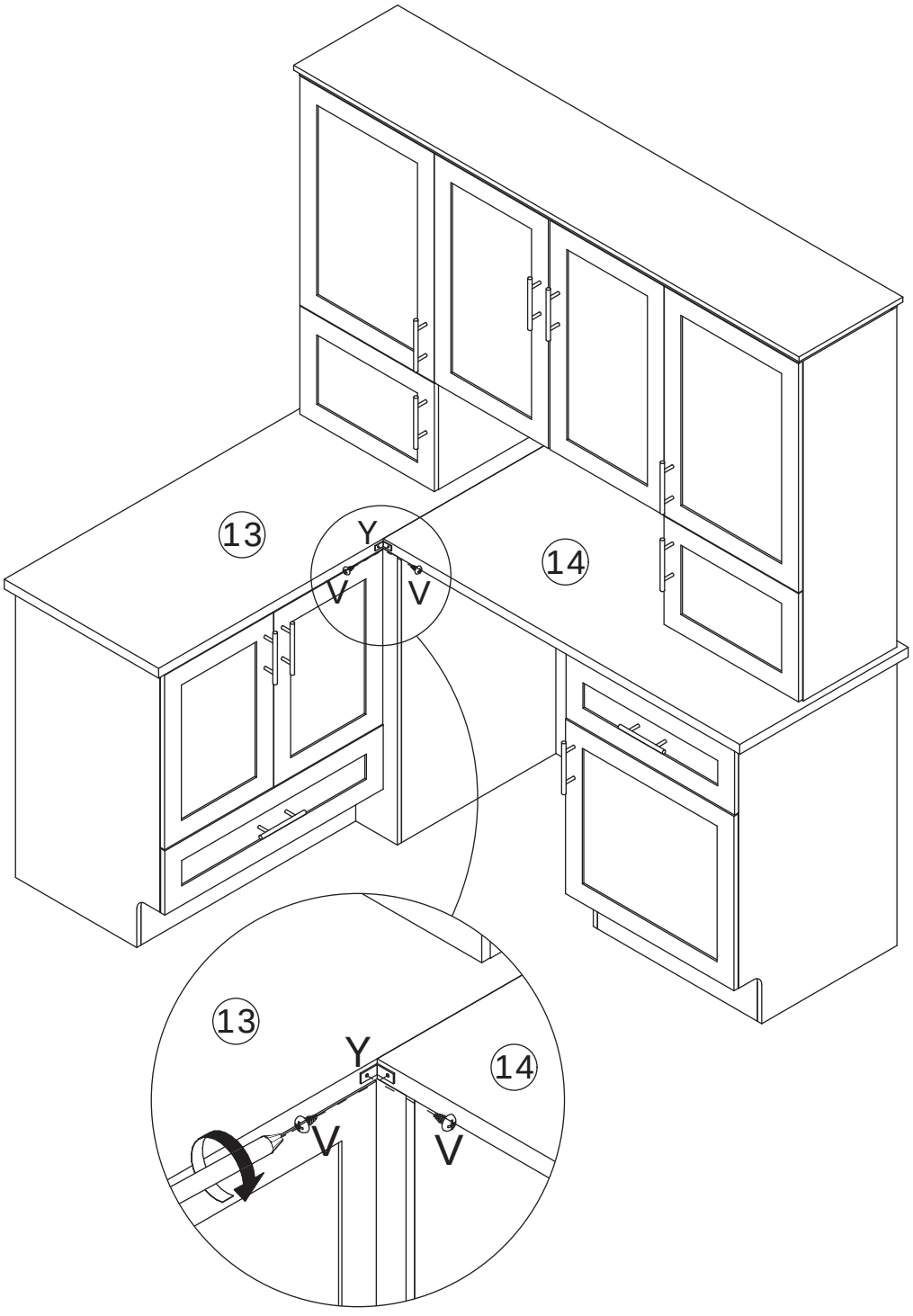

53

Z x 4



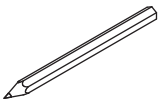

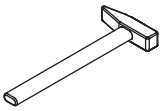



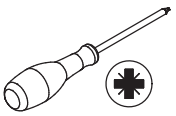

1.

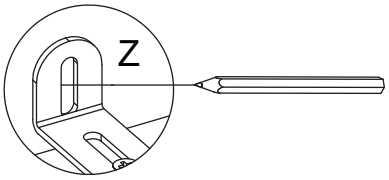

2.

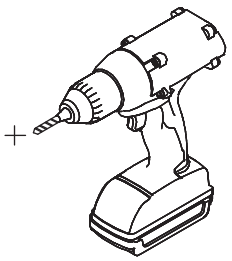

3.

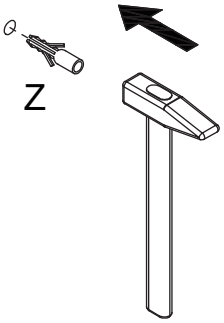

4.

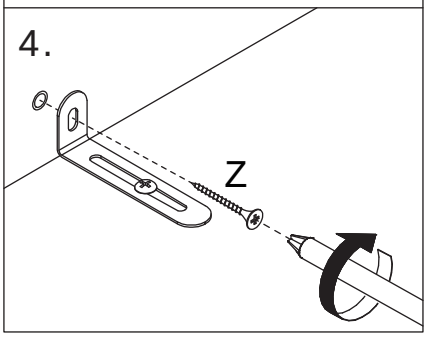

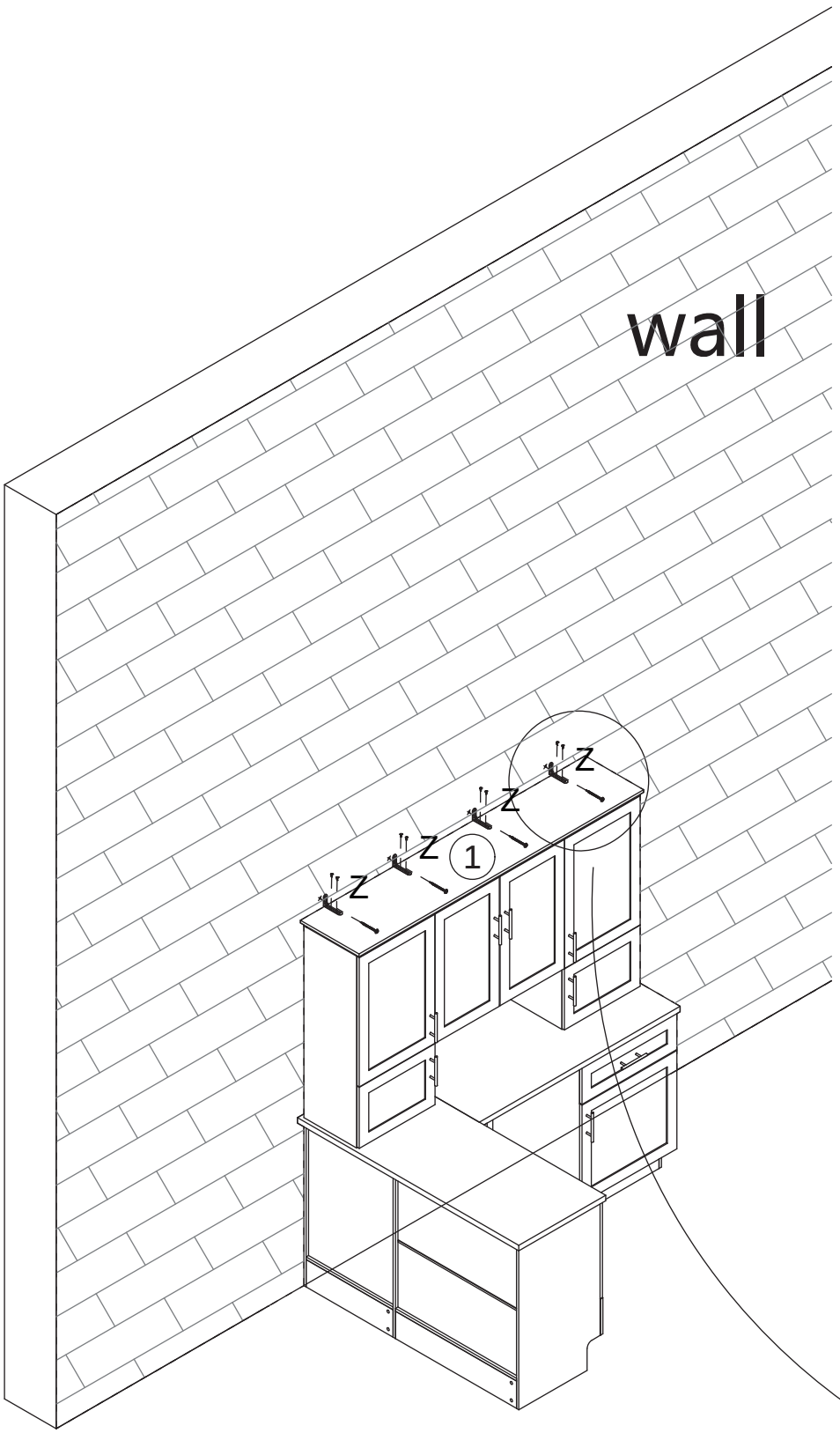

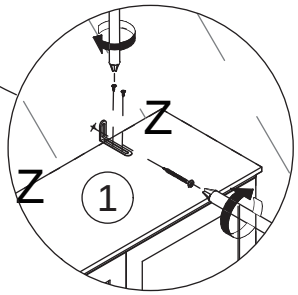

Install the anti-tip device as shown.

WARRANTY

WARRANTY CLAIMS

•There is a 30-day warranty for broken furniture or any other problems that do not work properly. The warranty will start from the date of purchase which must be verified by proof of purchase.

•Before making a claim, we may be able to answer your query, simply call us. Please leave your purchase order number, along with some details of the problem, if you want a replacement part. We will arrange within 48 hours. If there is out of stock, we will reply with a shipping date.

•The product must be used in accordance with the instructions provided. For health reasons.

•For other reasons, if the furniture needs to be returned, it must be cleaned and dried and operated within 30 days of receipt.

Type of Warranty Claim

•Failure to follow the furniture instructions will invalidate the warranty. Attention please.

•Does not include damage during installation, but includes damage during transportation.

Scope of responsibility

•Shall not bear any responsibility for misuse or user damage and / or loss of parts during the installation of furniture.

•After using, the damage and scratches of the furniture are not covered by the warranty.

The Warranty Relates to All Bought in The Us and Covers The Following Areas

•Sheet parts: 1 month from the date of purchase.

•Electrical parts: 1 month from the date of purchase.

RETURNS

CHANGED YOUR MIND AND NEED TO RETURN YOU ITEM?

PLEASE FOLLOW THE BELOW INSTRUCTIONS:

- If you have purchased and have simply changed your mind, follow the retailer's instructions for returns.

DEFECTIVE ITEMS

- If your item is defective in any way, i.e. it doesn't work but you can't identify why, in the first instance, please call us.

DAMAGED ITEMS

- If you receive an order with obvious shipping damage from the retailer, then we suggest the delivery is refused. If the delivery has been accepted and then shipping damage is found, please follow the specific instructions advised by the retailer.
  In all circumstances please save all packaging material and paperwork for the order. Please be aware that if you dispose of packaging material or attempt to return the merchandise without contacting the fulfiller, you jeopardise your chances of making a claim, and you may not receive a credit for the return.