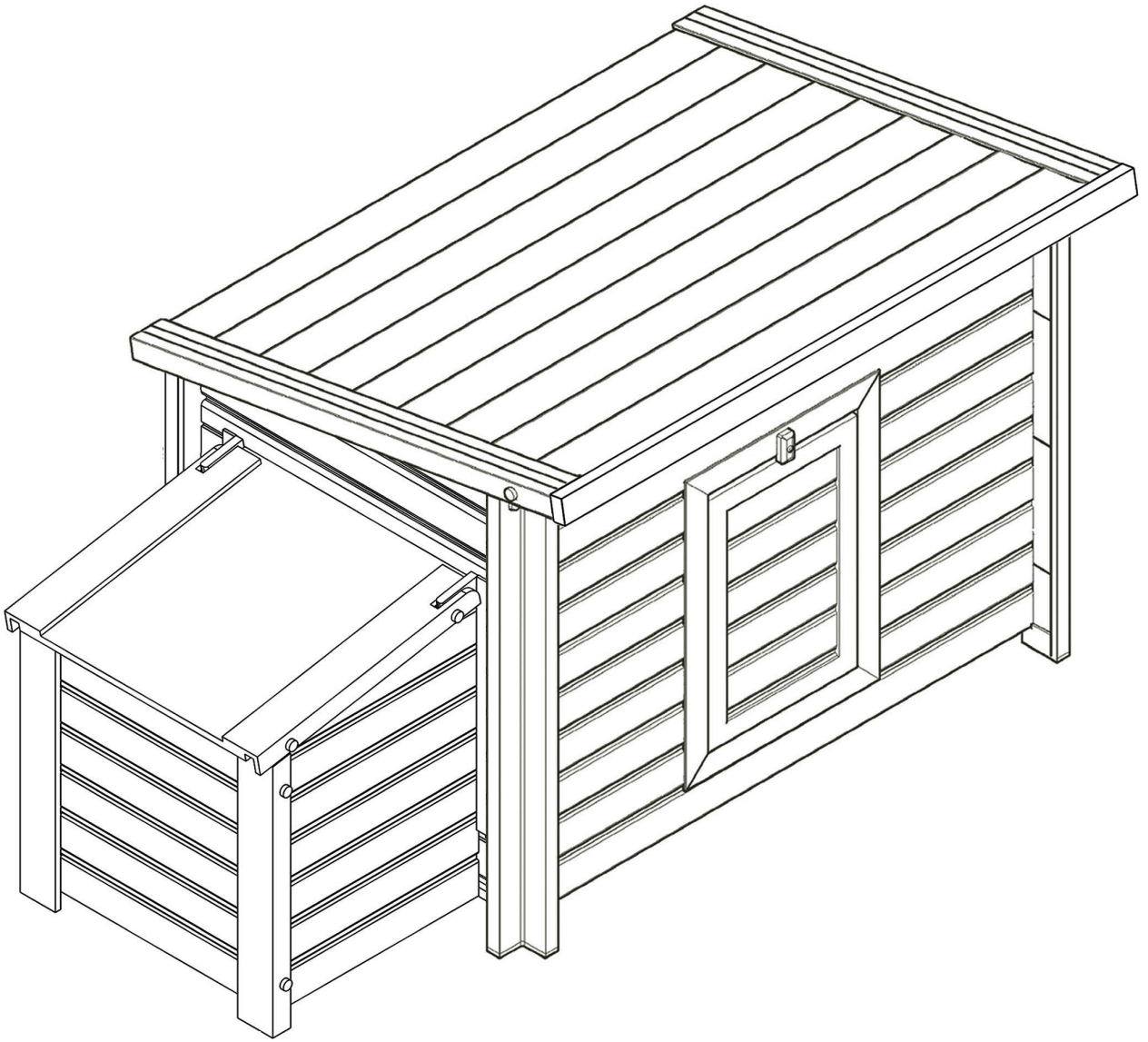

Parts List

Part Descriptions	Quantity
Wall, Floor, Roof Panels	30
Wall Columns	4
Door Frames	5
Roof Side Rails	2
Roosting Bar Parts	2

(Roosting bar might not be included for certain models.)

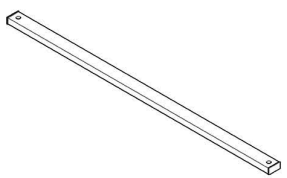

A × 2

Floor Support Bar

B × 8

Thumb Screw

C × 1

Roof Support Bar

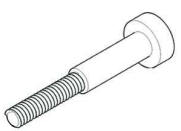

D × 2

Long Thumb Screw

E × 8

Nuts

F × 7

Short Thumb Screw

G × 2

Hinge pins

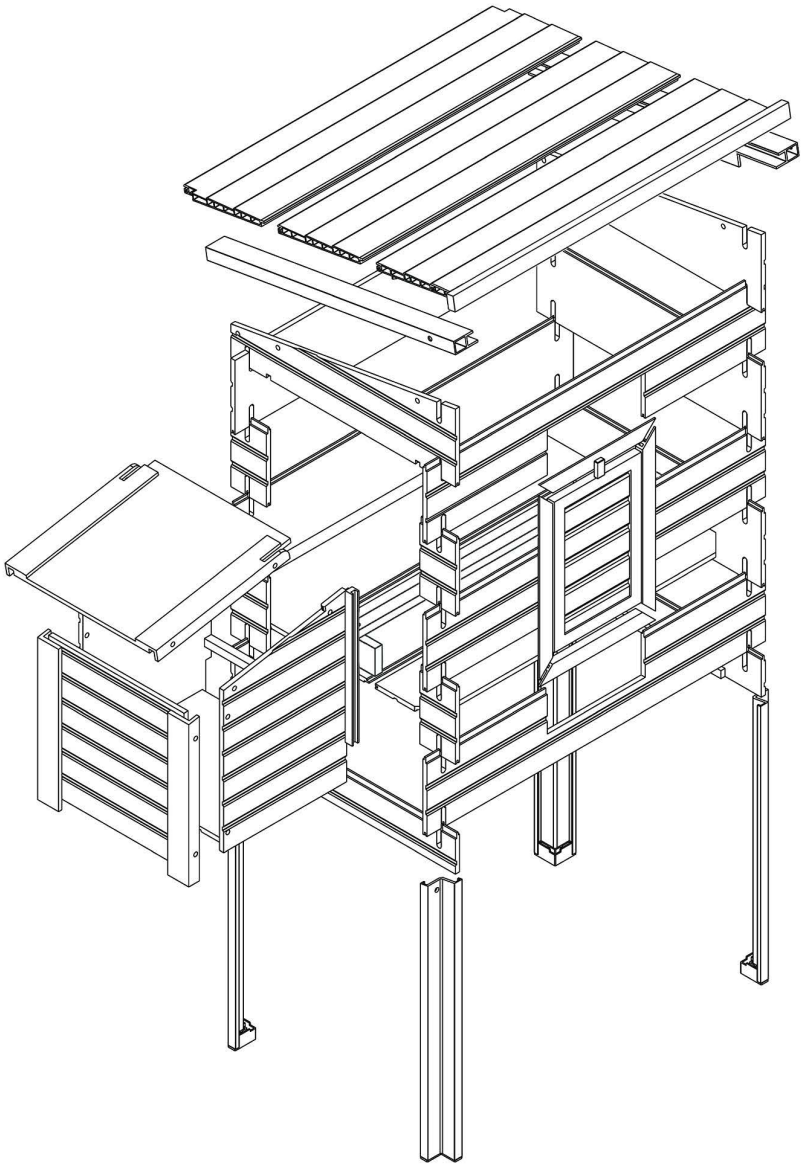

Notes

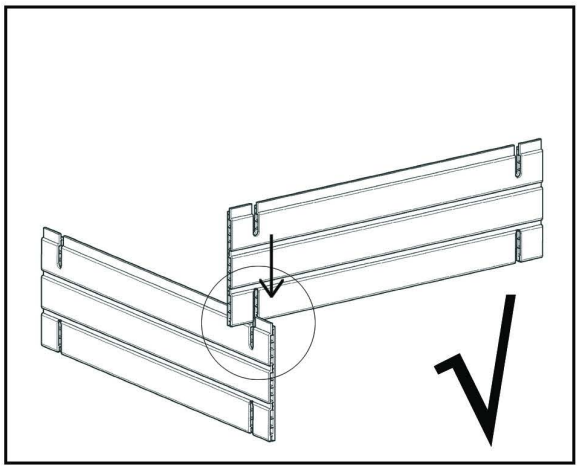

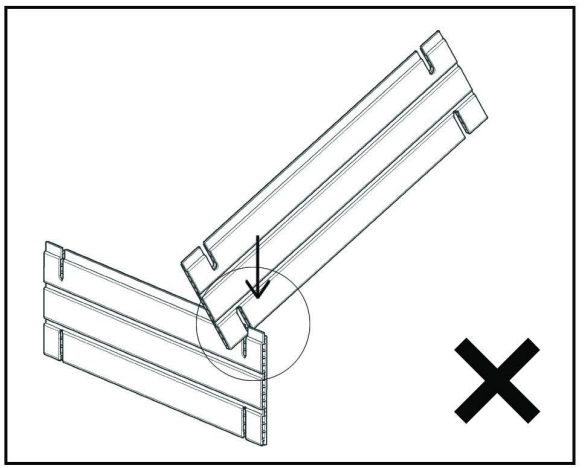

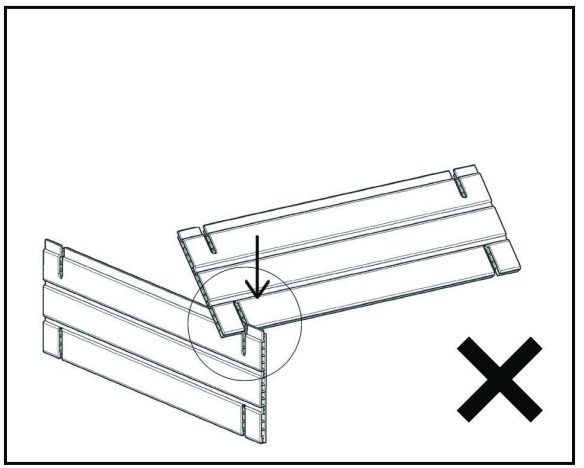

When installing wall panels, make sure the two connecting panels are at a 90 degree angle vertical to the ground, and 90 degree perpendicular to each other. Tilting in any way might cause damage to the groove.

Part Label.

All Parts are labeled in the sequence of assembly.

IMPORTANT ASSEMBLY TIPS

Before launch our new ecoFLEX® product line, we have conducted hundreds of testing and surveys with end users. Thanks to all the participants and their feedbacks, now we have these valuable tips to pass on to you …

- **Assemble on a hard, flat surface.** Once assembled, you can easily move the house to the location desired.
- **Sort the parts in sequence.** We know you are eager to dive in, but spending a moment lay out the parts by ascending numbers will save you time and frustration later on.
- **Note the difference of the panel edges.** For all wall, roof and floor panels, one edge has lip, the other edge has groove. During assembly, the grooved edge is always facing downward (except for the floor panels).
- **Note the difference of the two sides of panels.** As a general rule, the flat side is facing inside the house, and the washed side is facing outside.

Step 1.

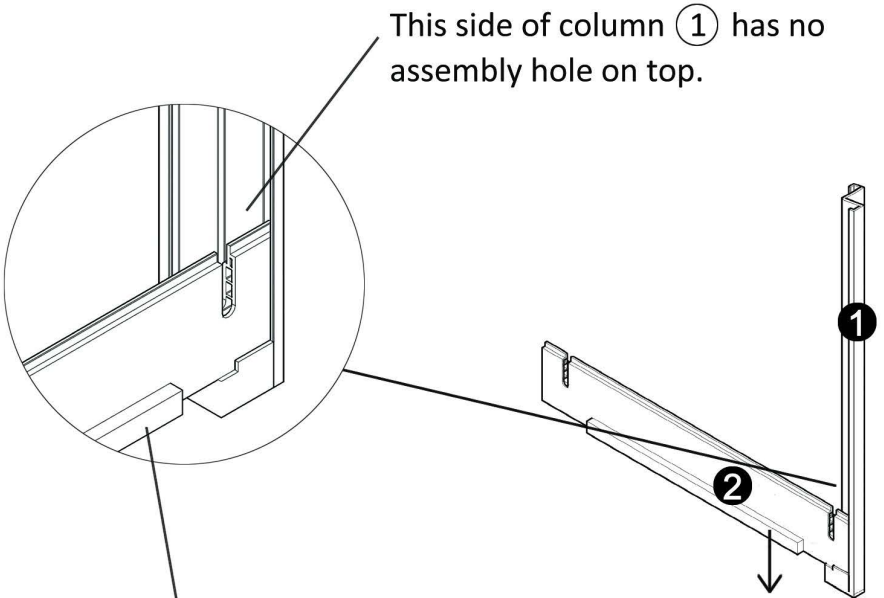

Step 2.

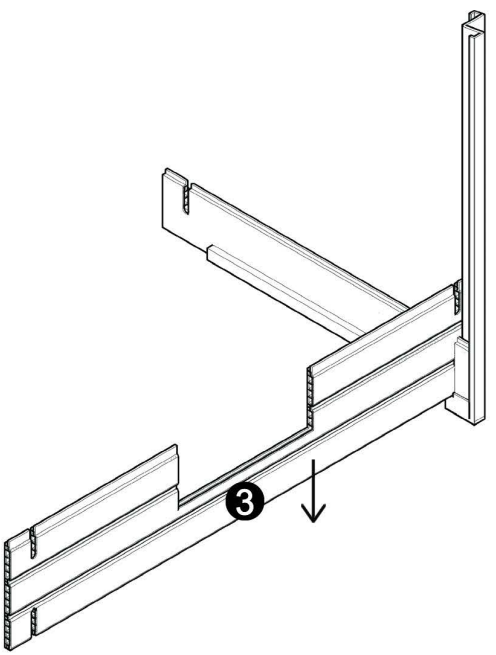

Note: After install Panel ③, make sure the FLAT side of panel ① and ③ are facing inside, and the washed sides are facing out.

Step 3.

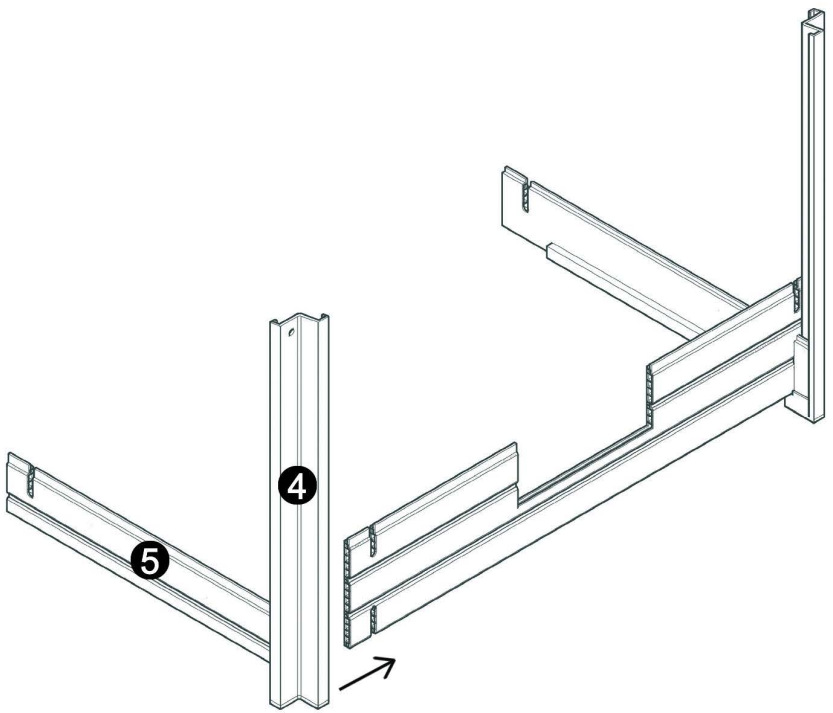

Step 4.

Move assembled parts ④ & ⑤ and ③ near to each other. Lift ③ upward as shown, then tilt ④ & ⑤ so ③ is perpendicular to ⑤. Insert ③ into ⑤.

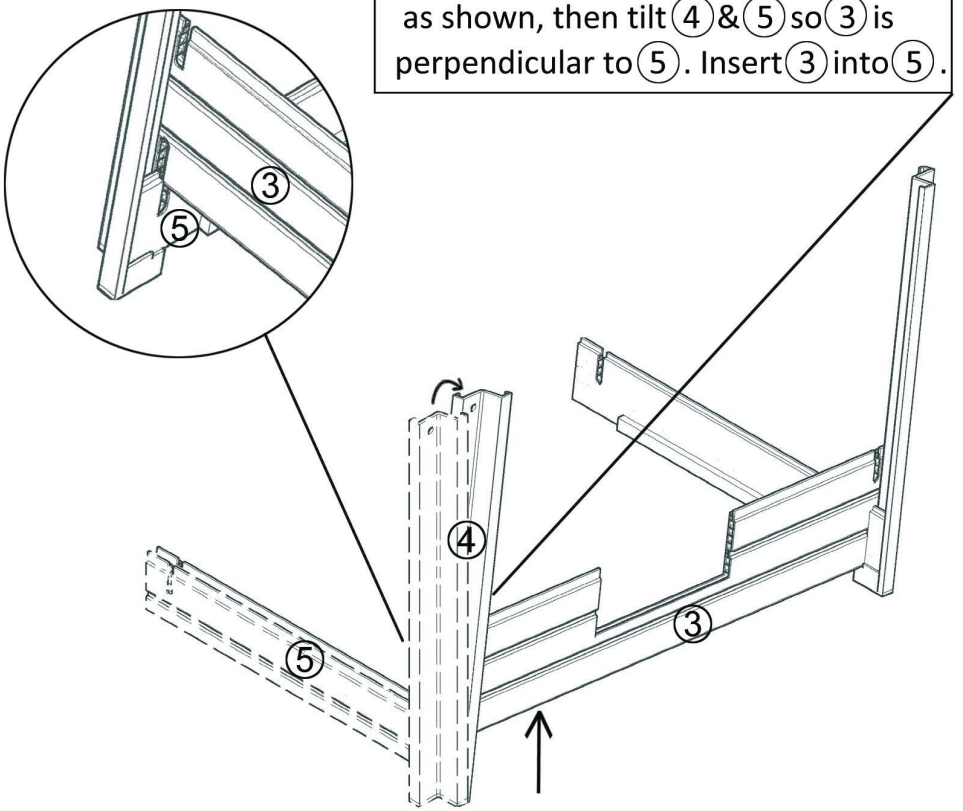

Step 5.

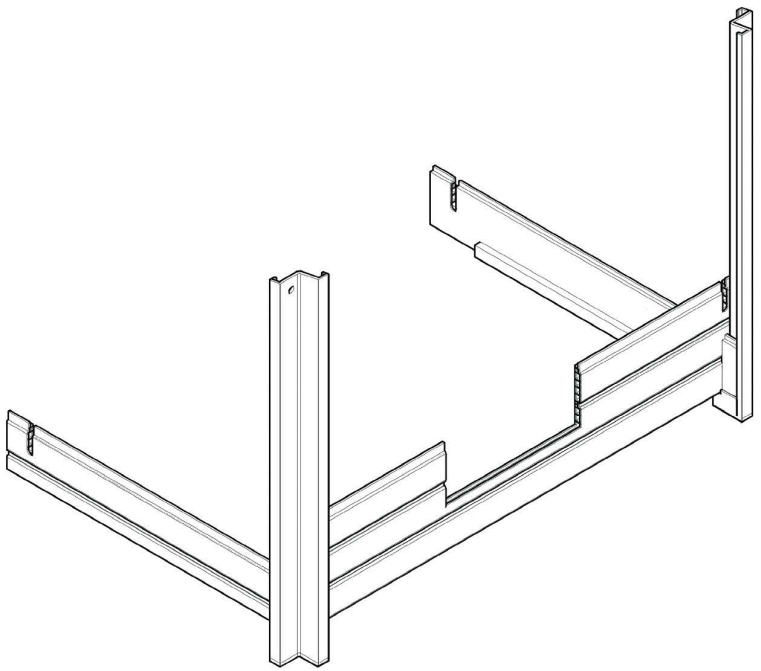

Step 6.

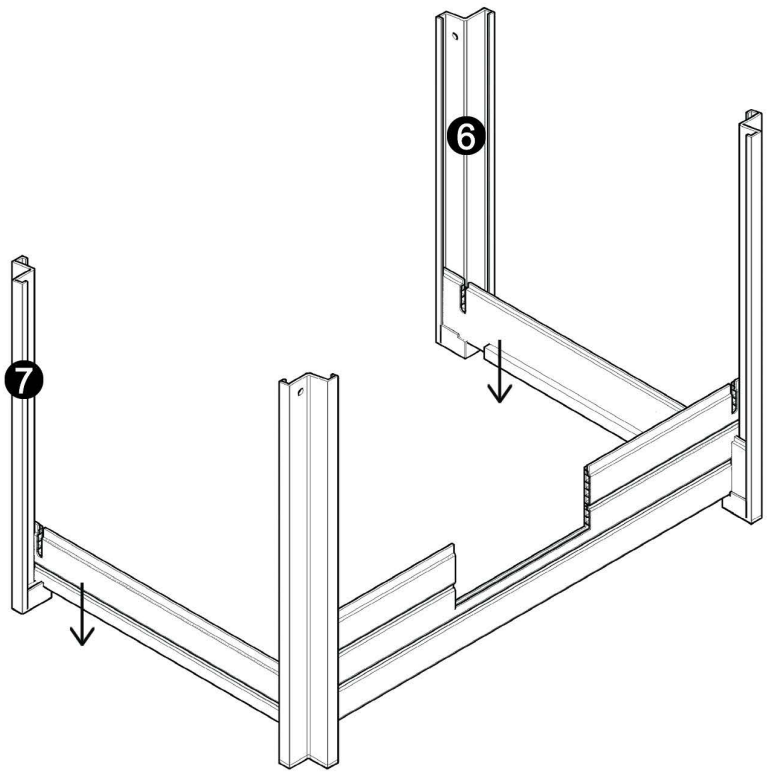

Step 7.

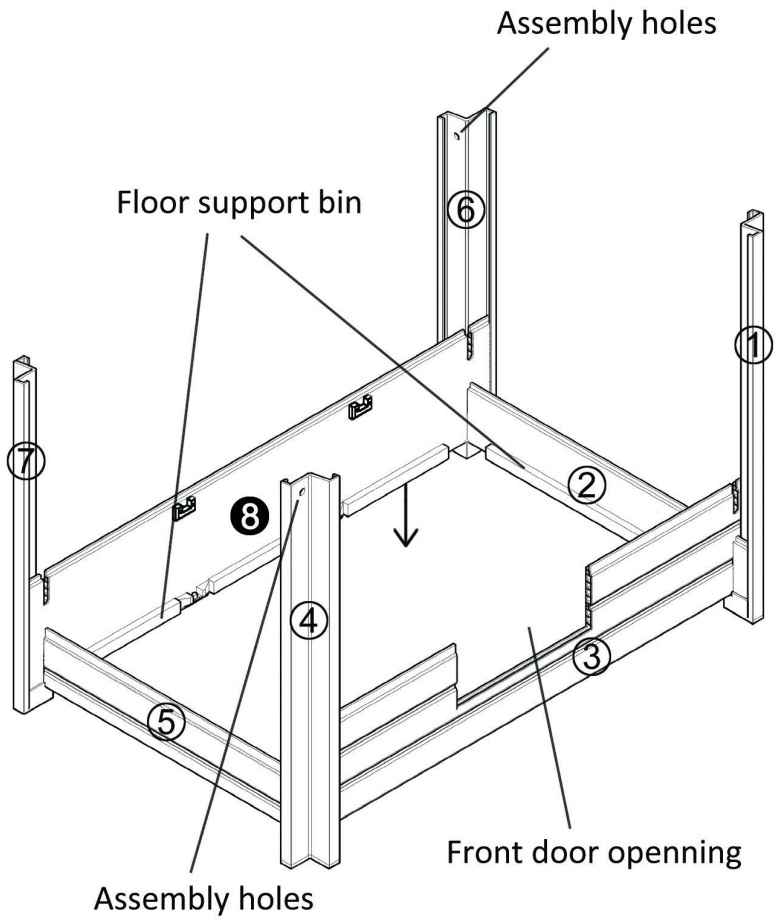

So far you have setup the wall base panels, ②, ③, ⑤ & ⑧; and the 4 column posts. Step back and stand facing the front door open. Do a quick check:

- The FLAT SIDES of the all wall panels are facing inside.
- The floor support bins are located on the lower edge of the flat side of the wall panels.
- The assembly holes on the two front columns ① & ④ are facing forwards; while the assembly holes on the two back columns ⑥ & ⑦ are facing each other.

Once you check all the above, you are ready to move on…

Step 8.

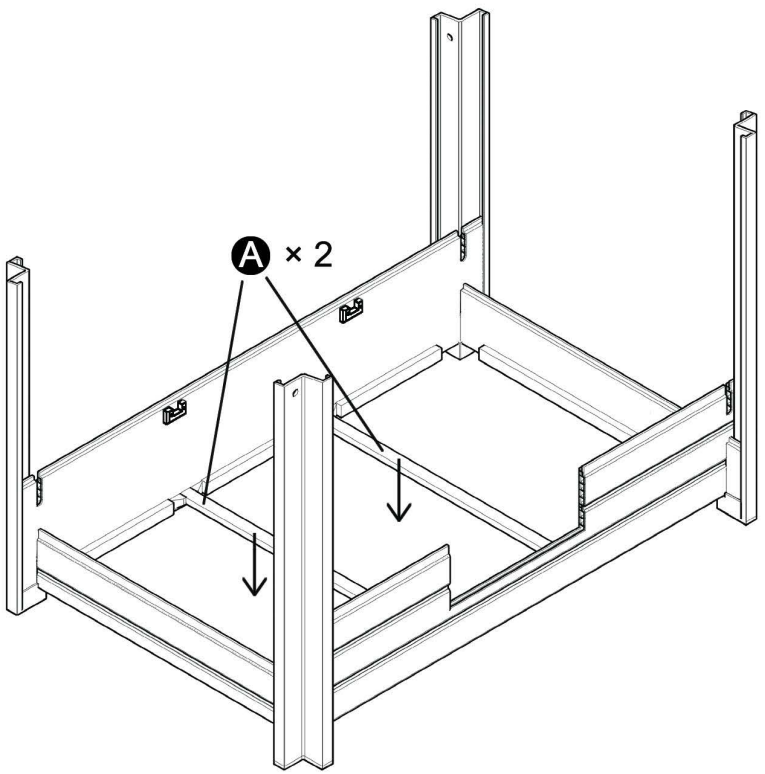

Step 9.

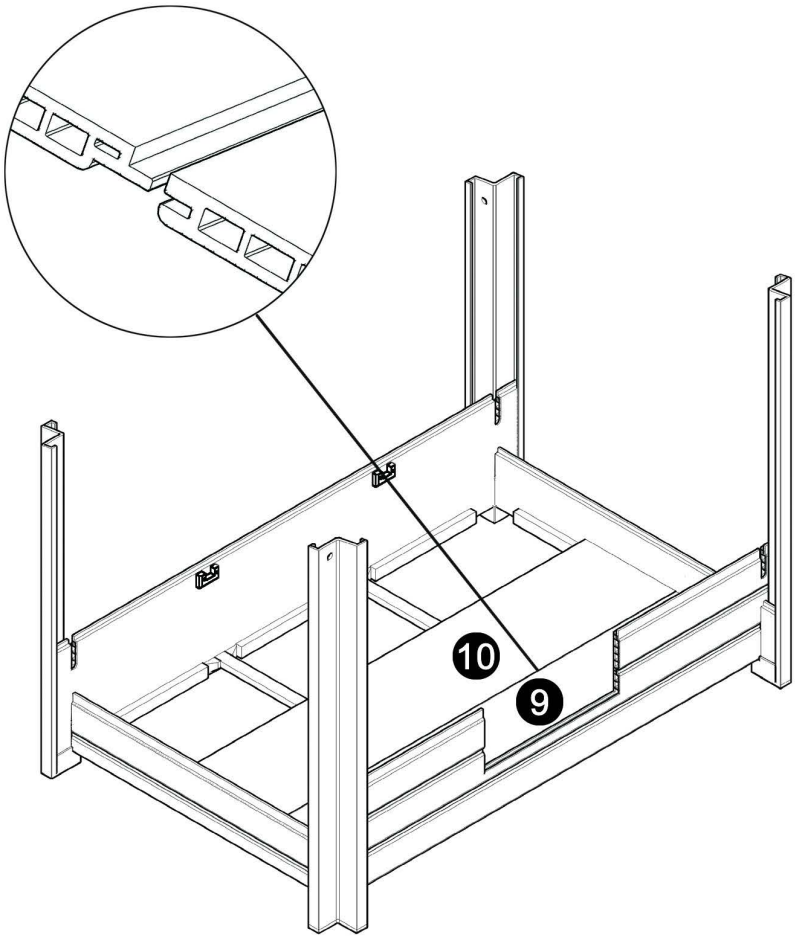

Step 10.

Hold panel ⑪ at the two corner cutouts. Slightly angel ⑪ into ⑩. Release panel ⑪, then gently push it down.

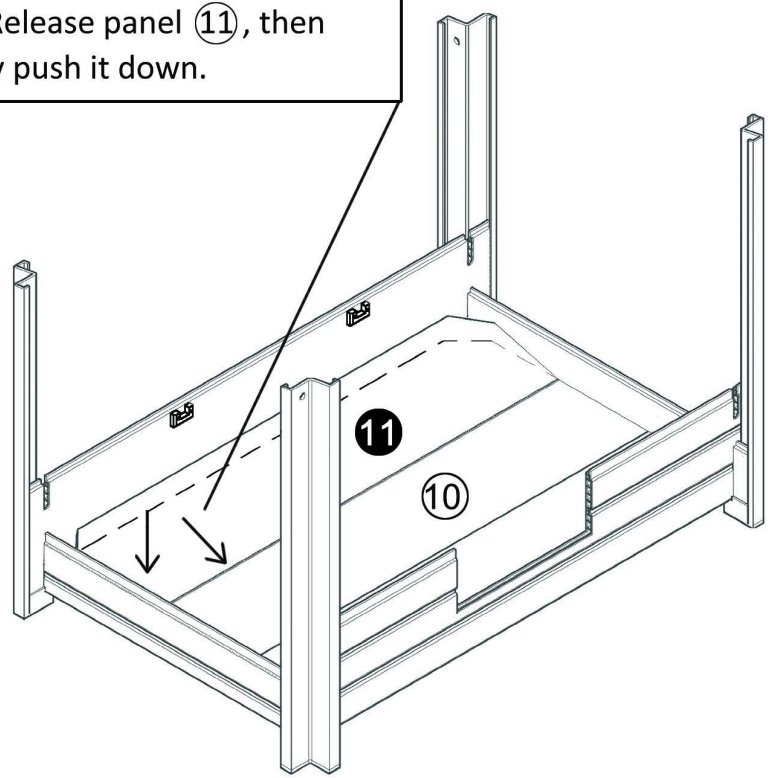

Step 11. (for selected models)

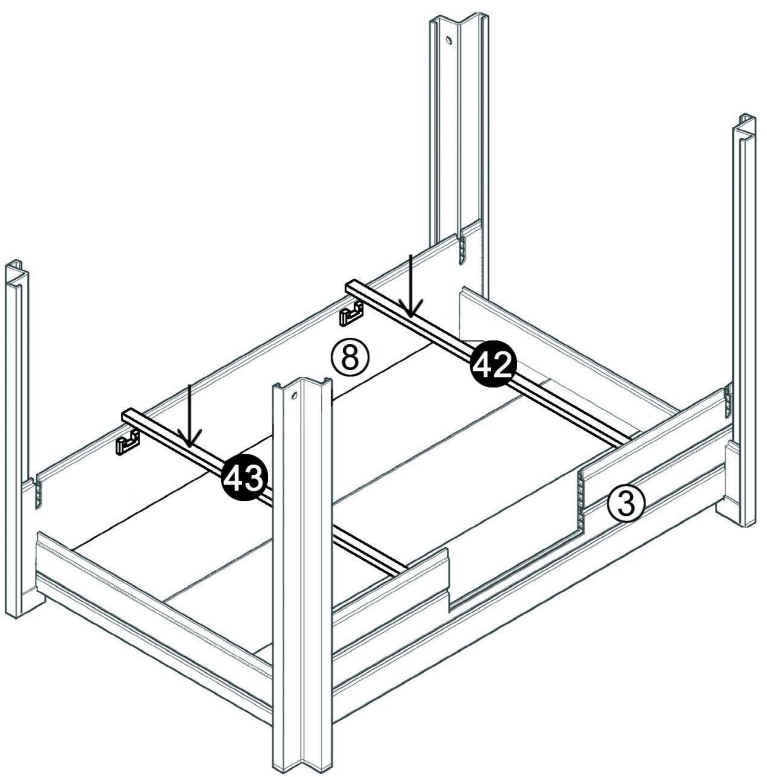

Note: If you chicken barn comes with 2 roosting bars. Put the roosting bars ㊷ and ㊸ into the U-shaped slots on wall panels ③ and ⑧.

Step 12.

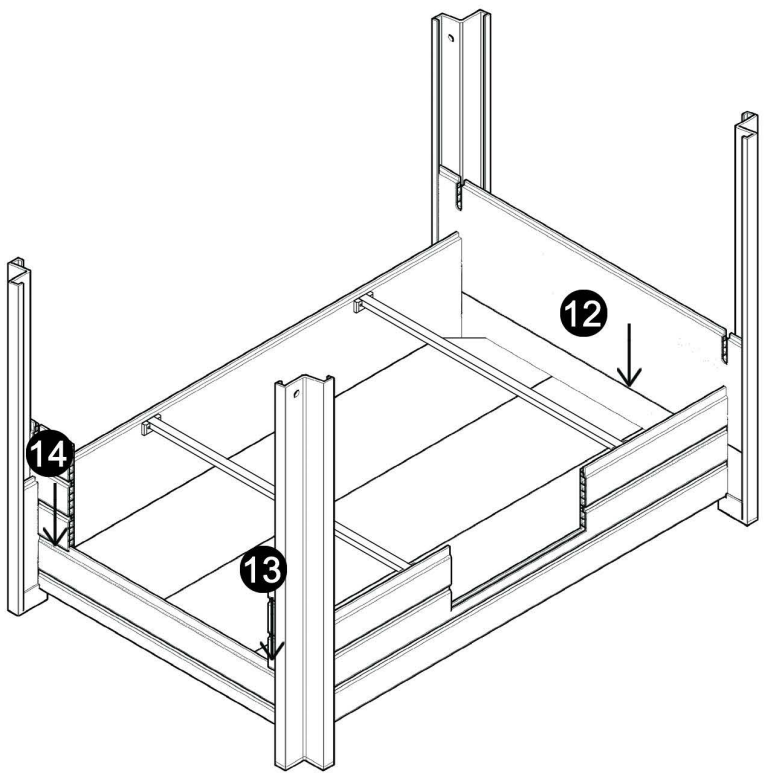

Step 13.

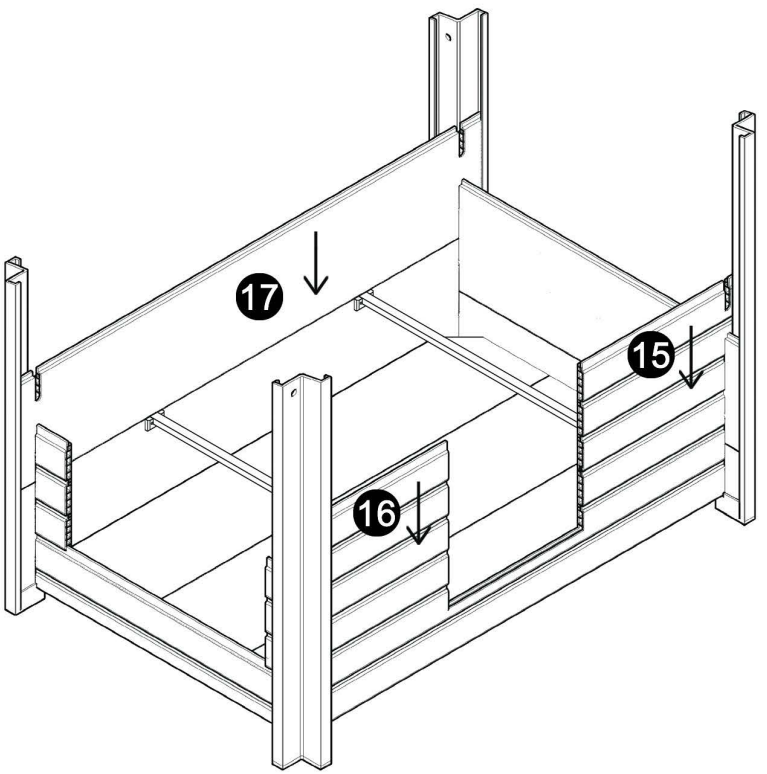

Step 14.

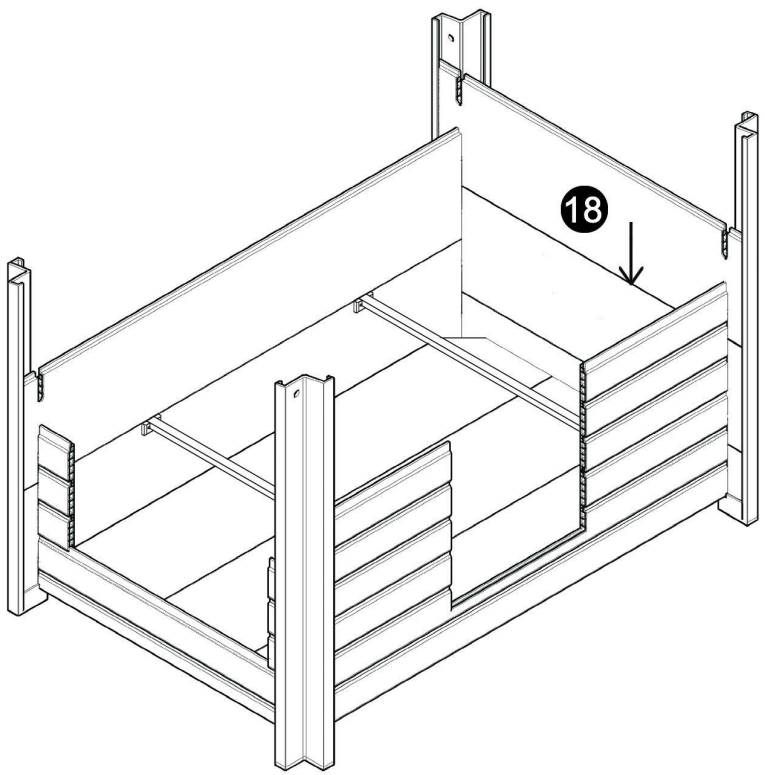

Step 15.

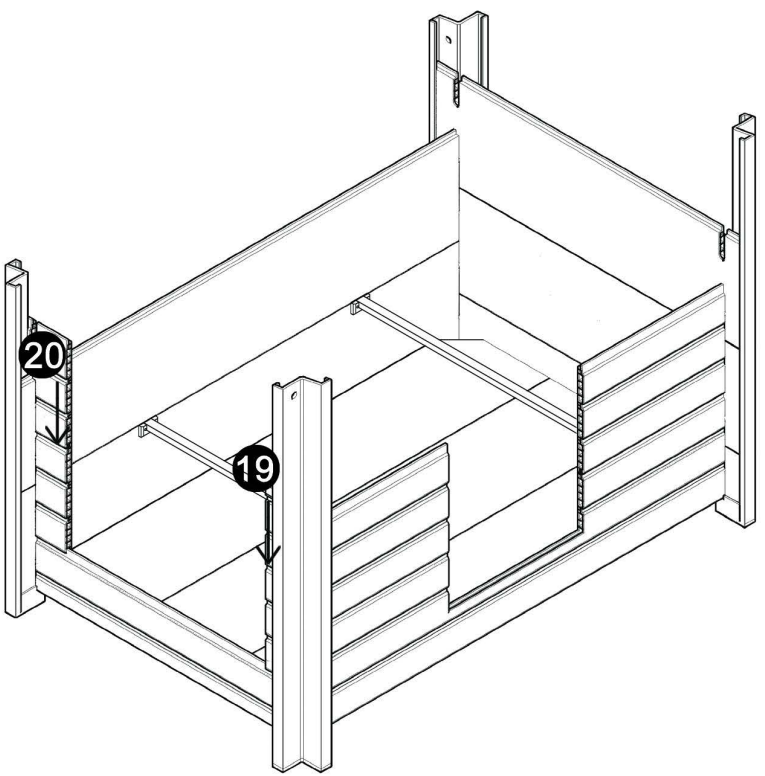

Step 16.

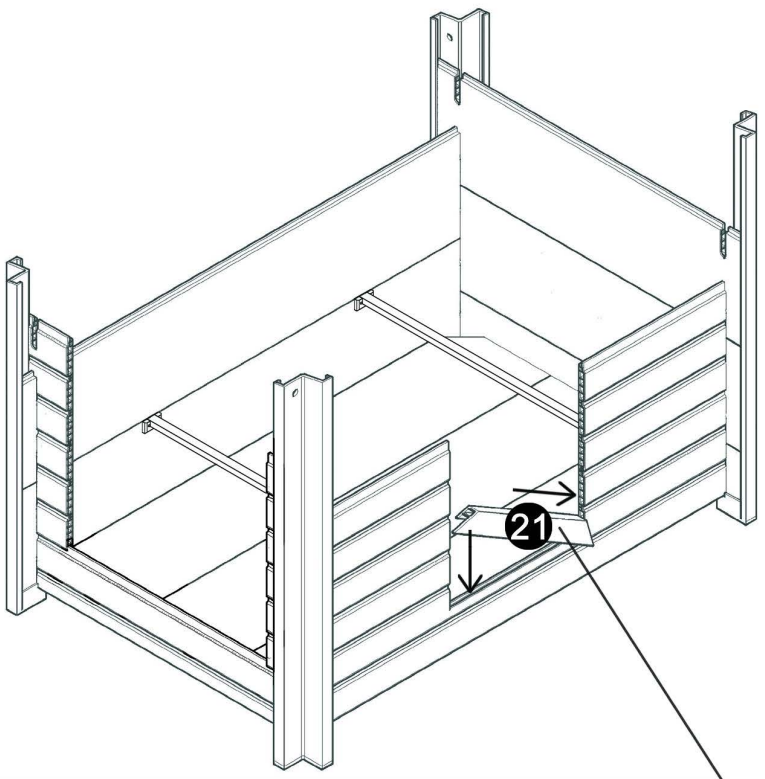

Place door frame 21 into one of the lower corners of the door opening, then push the other end down gently. The side of the frame piece with part # bar code should be facing inside the barn. Same for all door frame pieces.

Step 17.

Insert one end of a pin G into the hole in door panel 24, the other end into the hole in door frame 22. Repeat on the other side. Place the assembled unit in the door opening as shown.

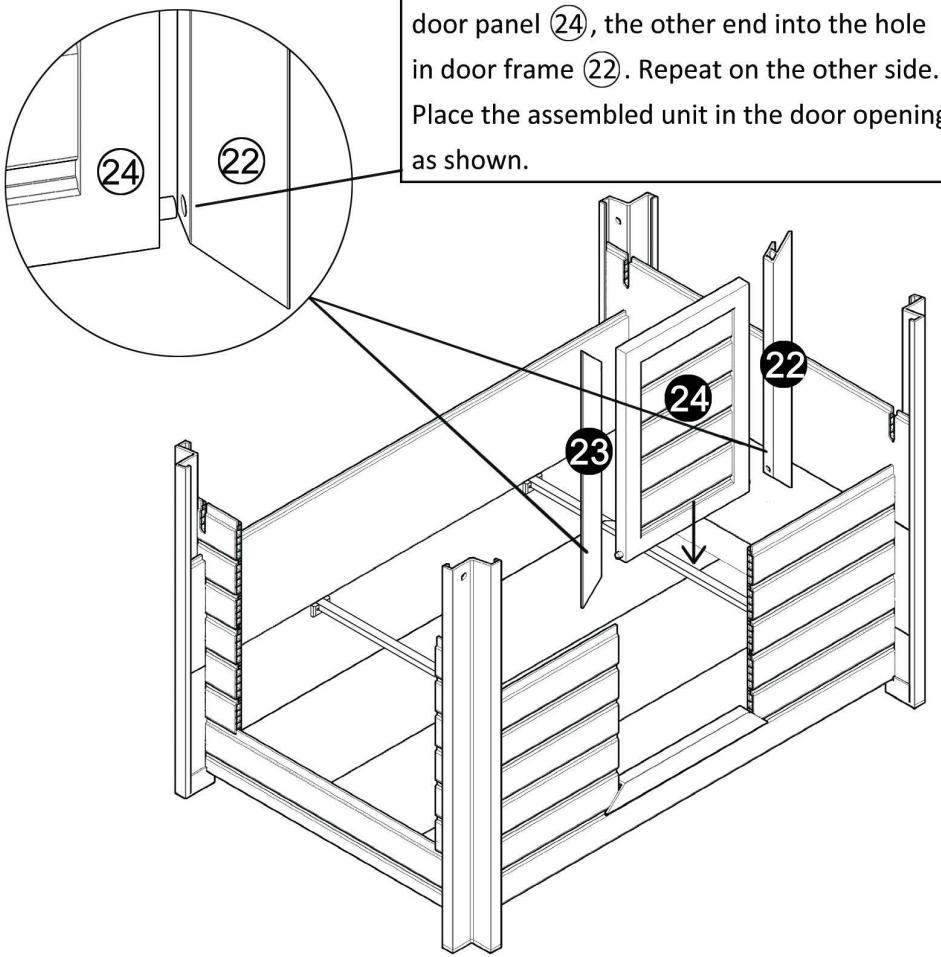

Step 18.

Attach door frame ㉕ to panel ㉖ in the same fashion as Step 16.

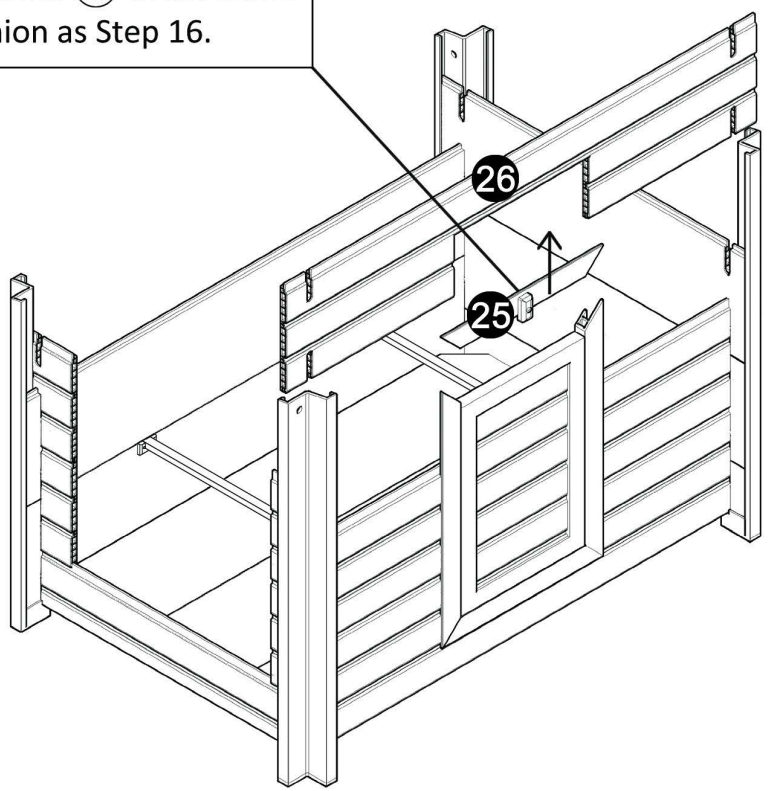

Step 19.

Hold door frame ㉕ and wall panel ㉖ together, insert wall panel ㉖ into place.

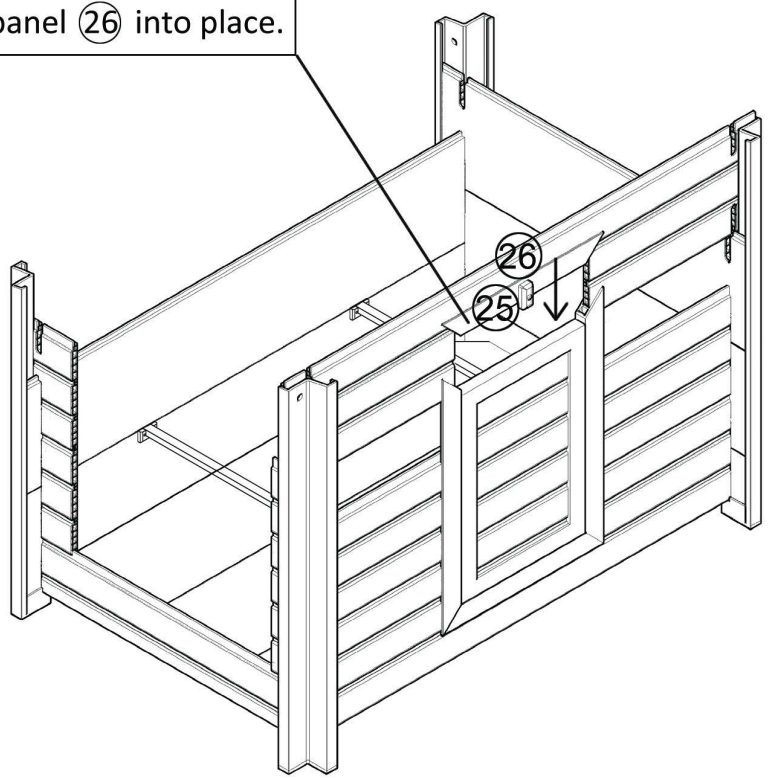

Step 20.

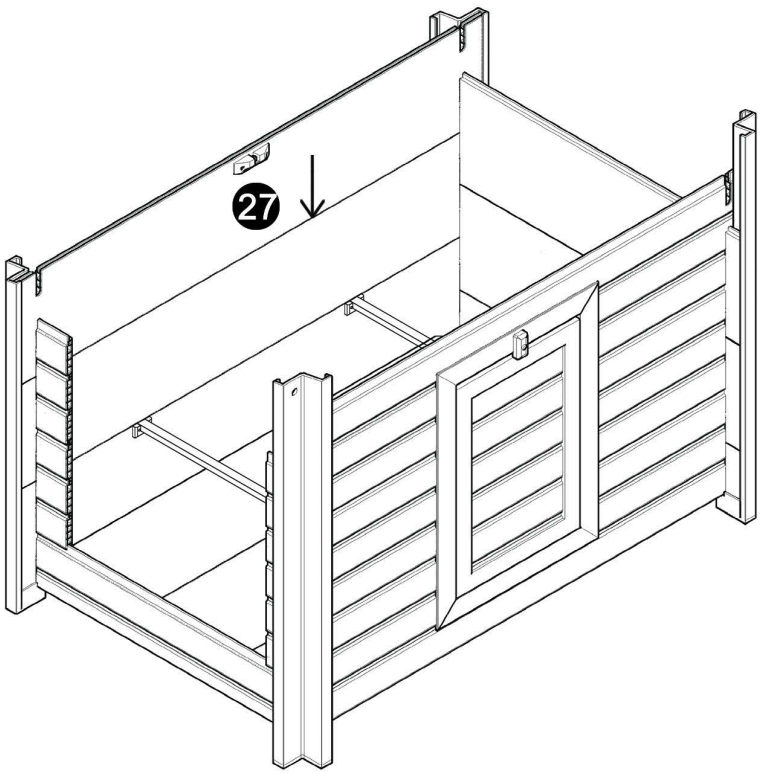

Step 21.

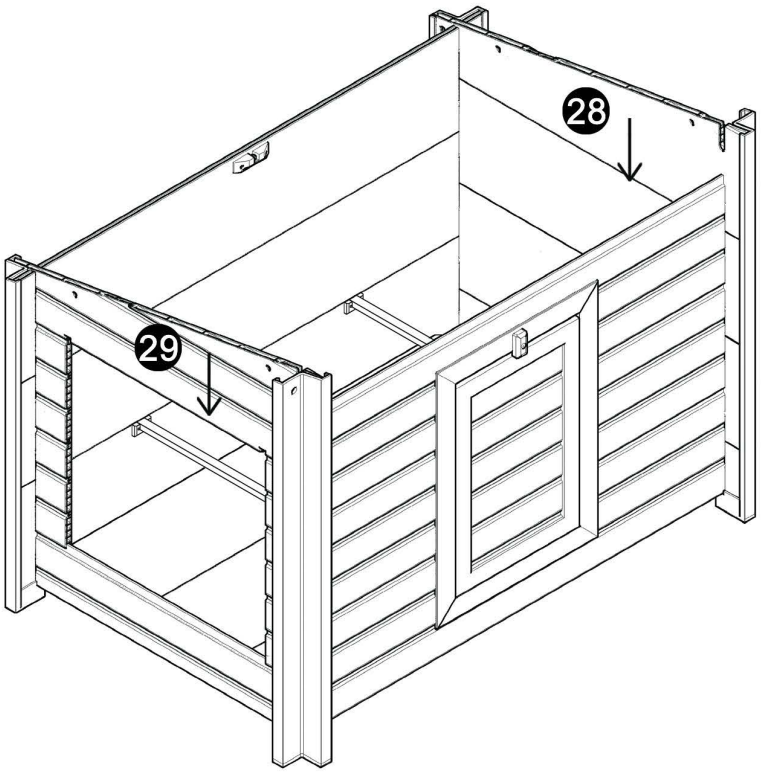

Step 22.

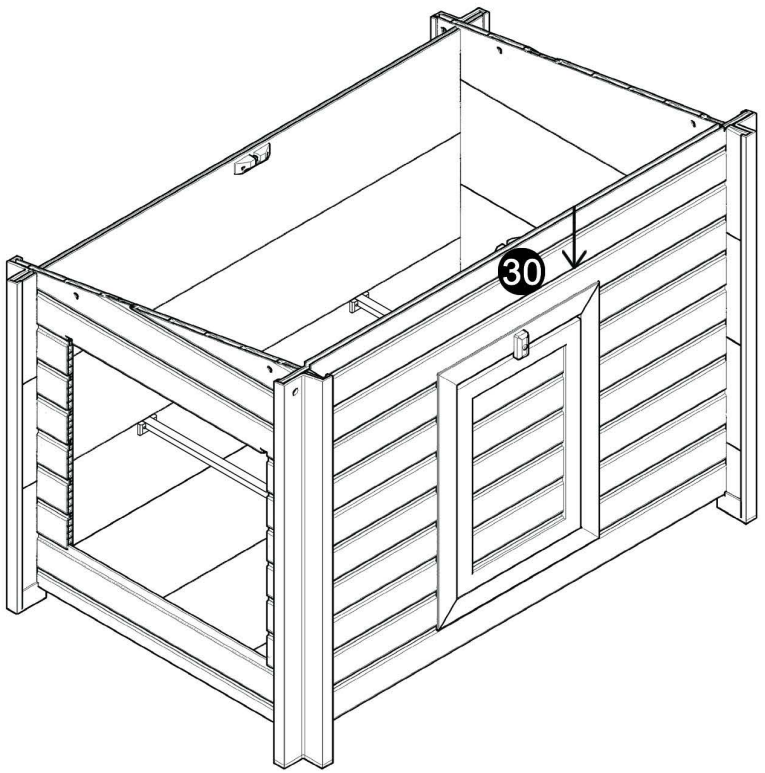

Step 23.

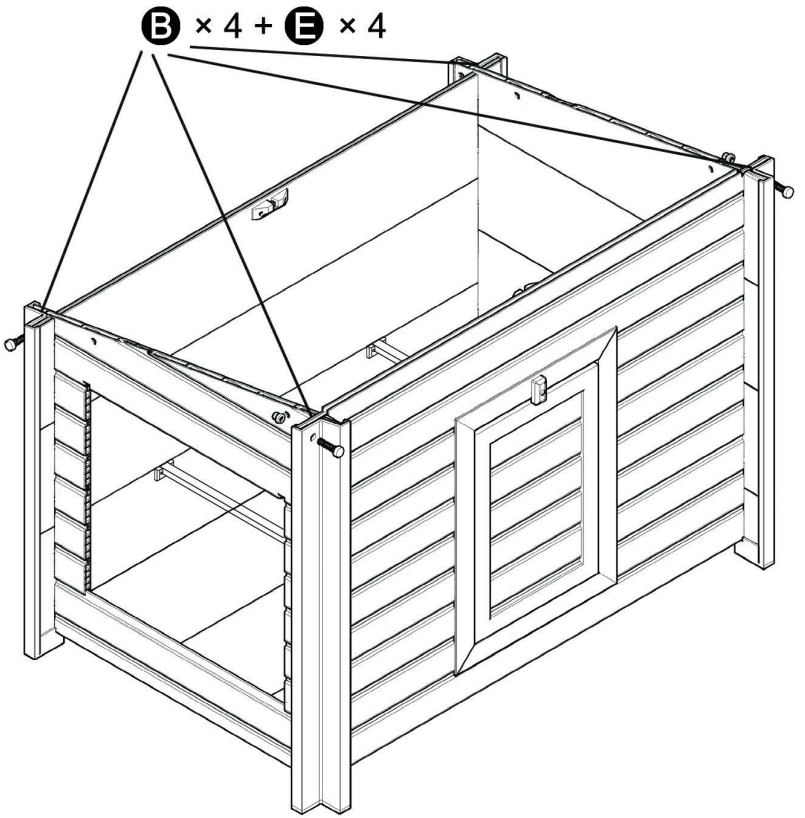

Step 24.

Parts ㉛ and ㉜ should be installed with the flange attaching to the inside of the wall panels.

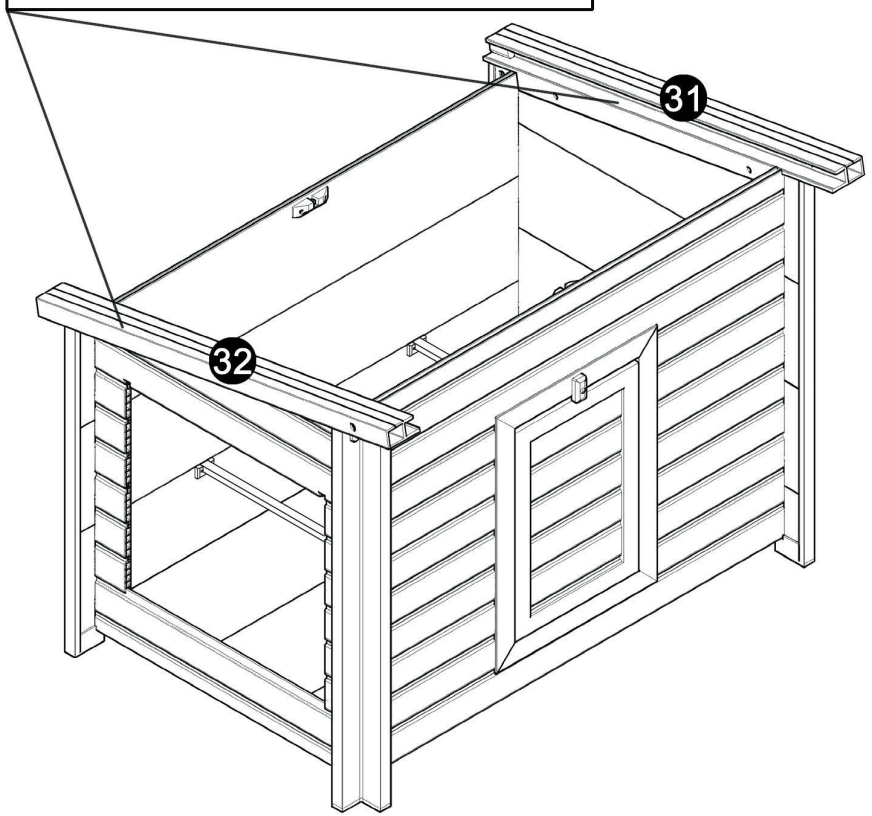

Step 25.

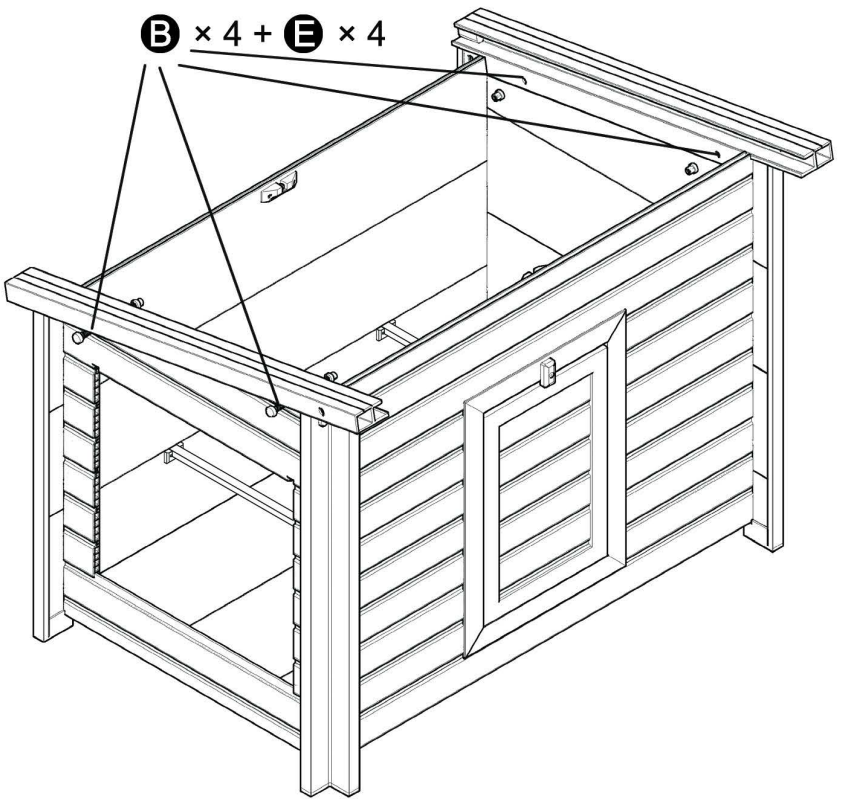

Step 26.

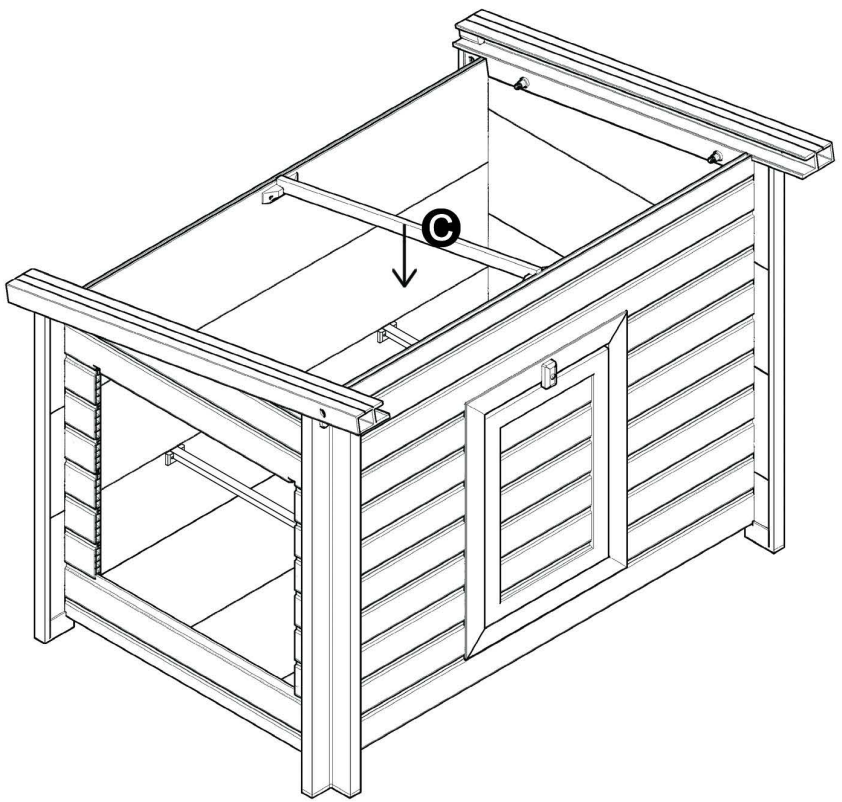

Step 27.

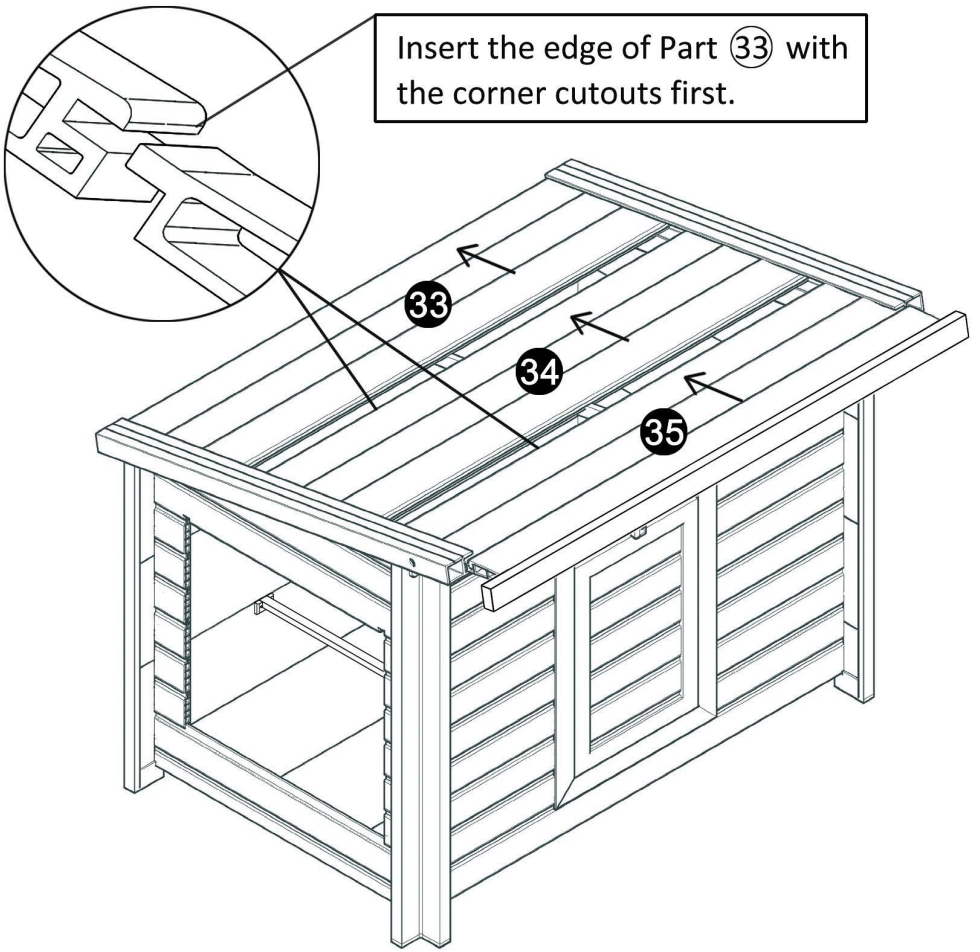

Step 28.

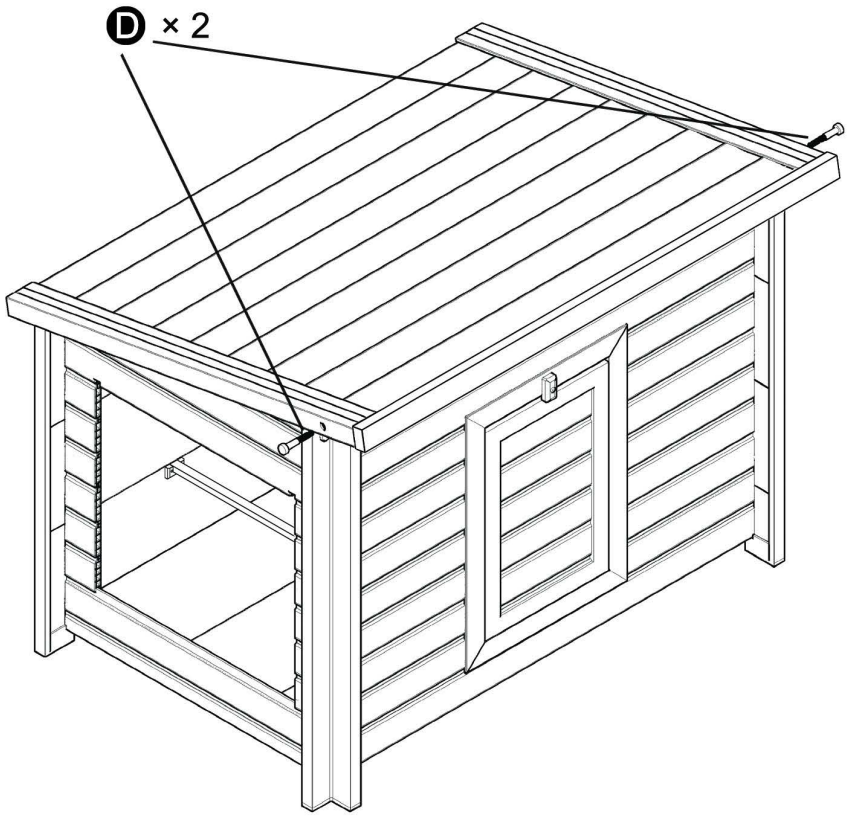

Step 29.

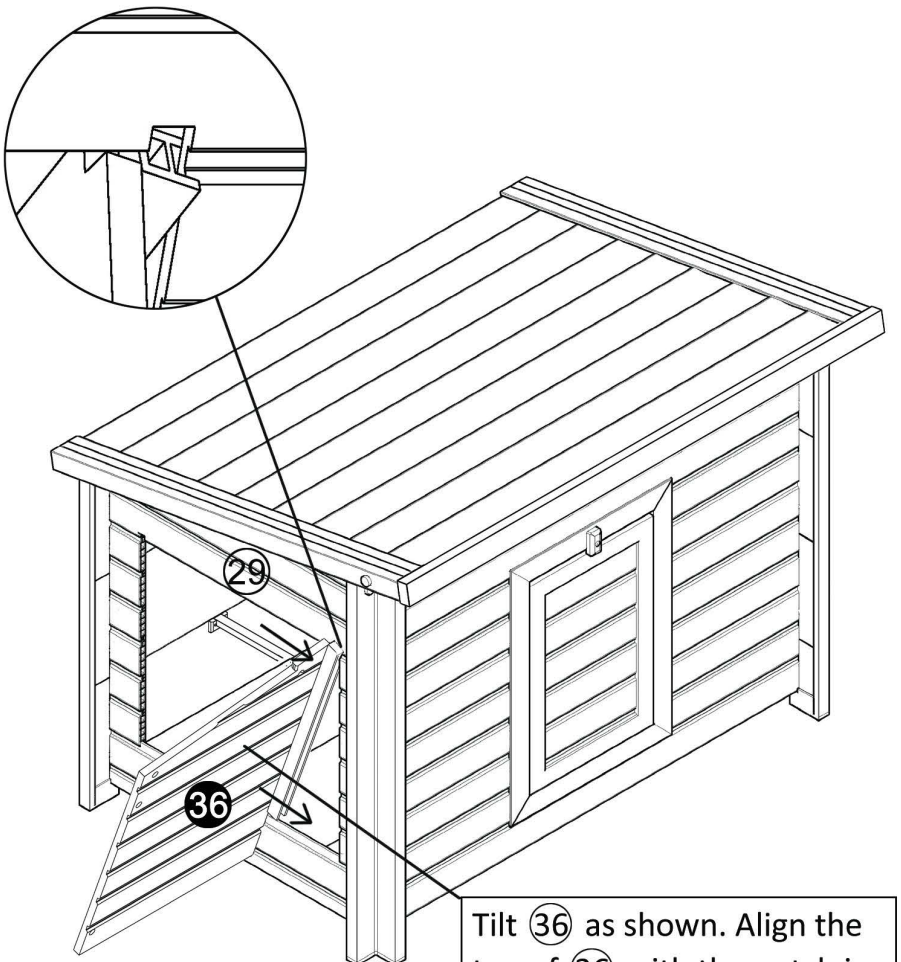

Tilt 36 as shown. Align the top of 36 with the notch in 29. Push to lower part of 36 sideways until vertical.

Step 30.

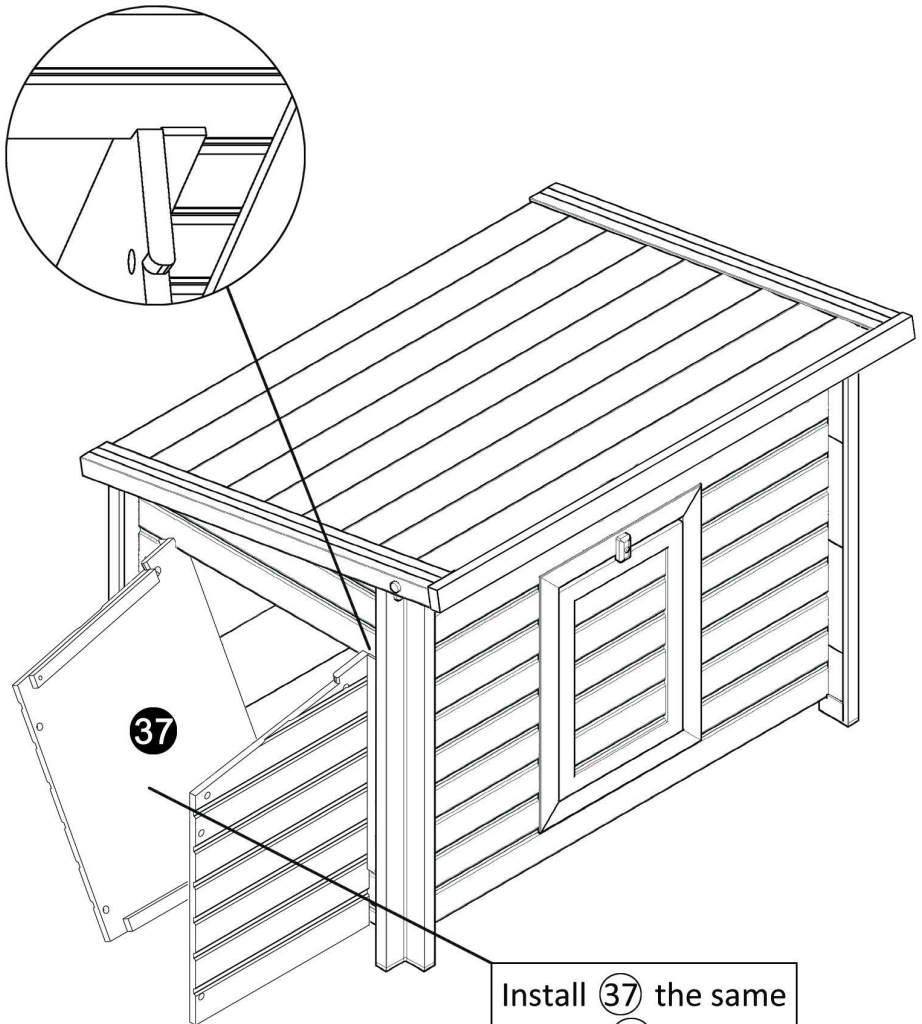

Install 37 the same way as 36.

Step 31.

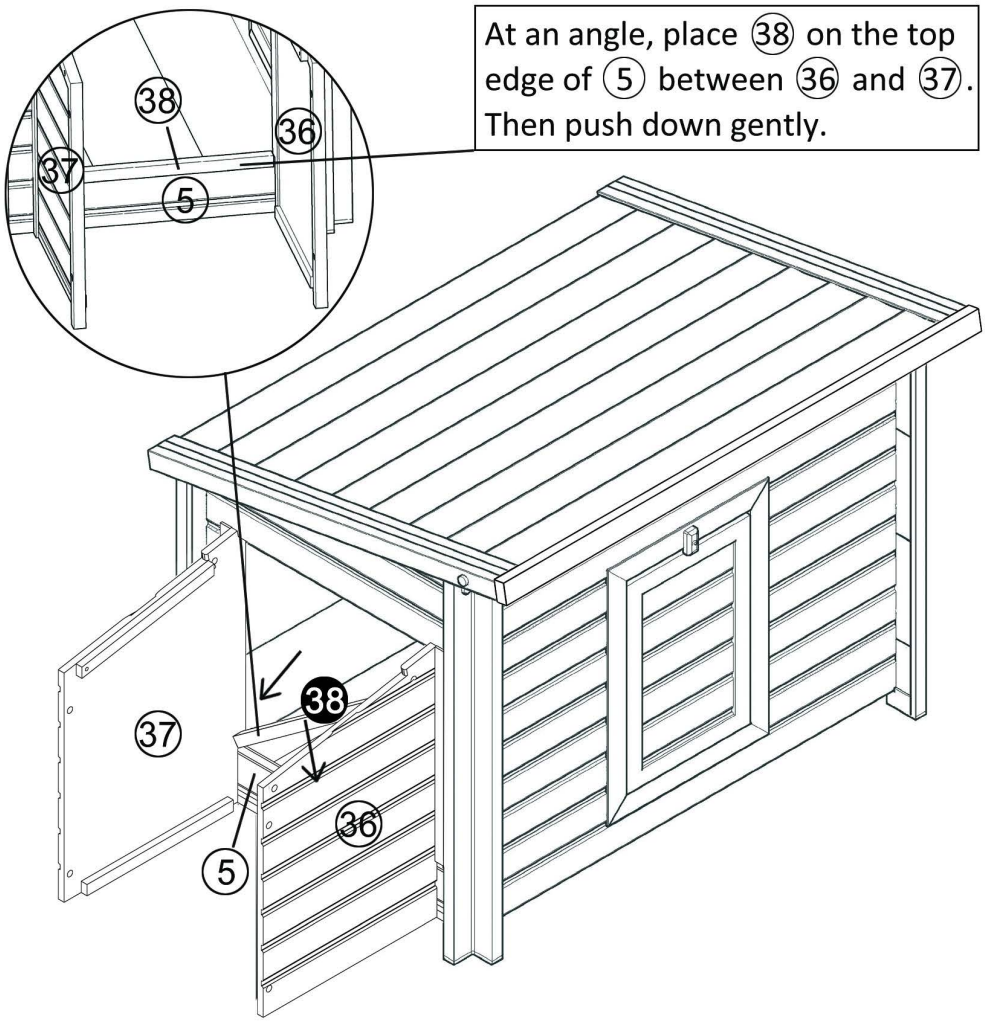

At an angle, place 38 on the top edge of 5 between 36 and 37. Then push down gently.

Step 32.

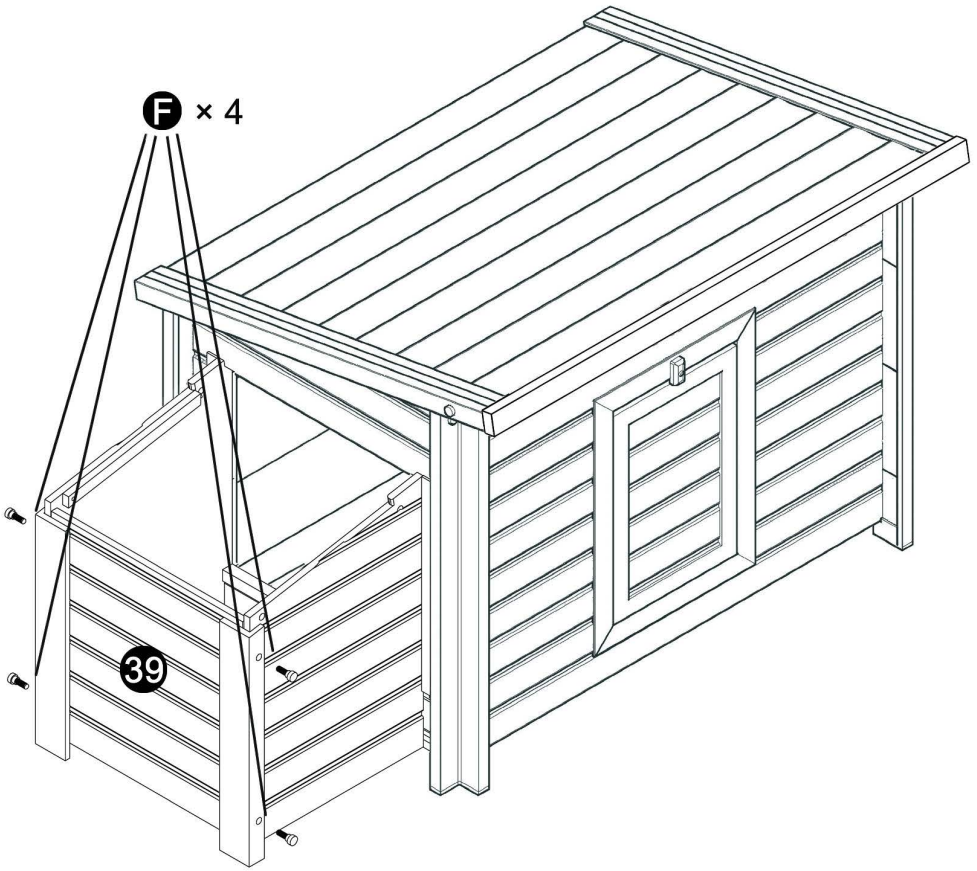

Step 33.

Insert nesting box floor 40. Note the notches at the front and back are different. Check alignment to make sure the floor is inserted correctly.

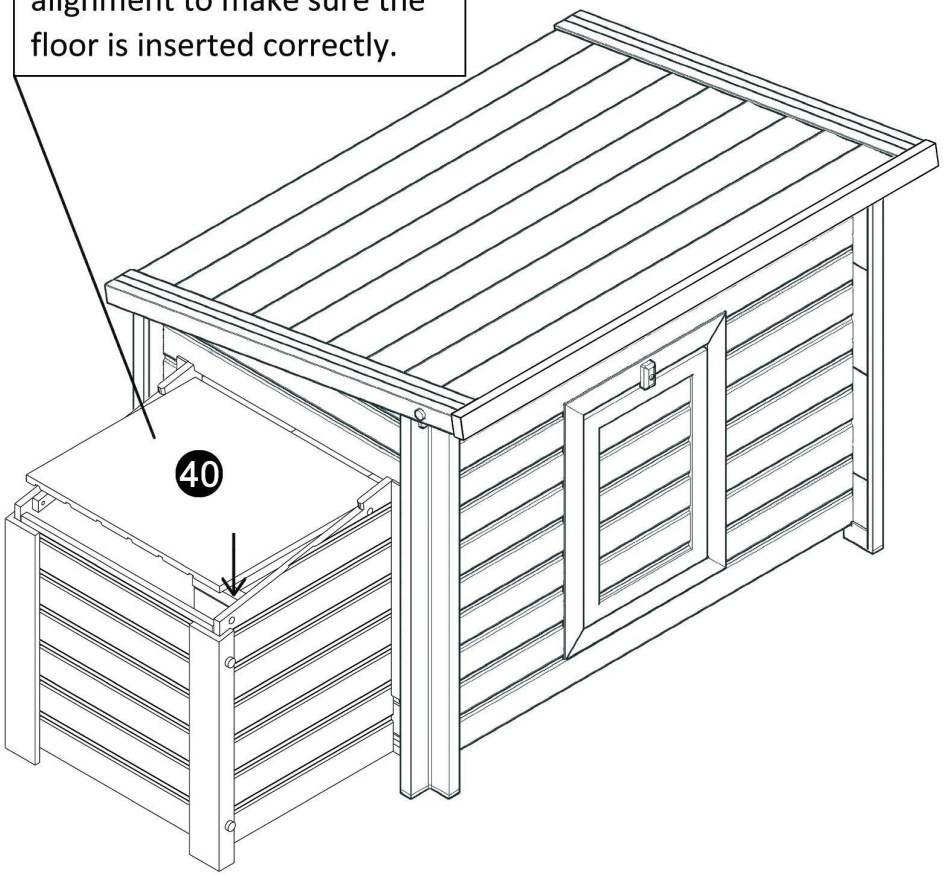

Step 34.

Locking Nesting Box (optional):

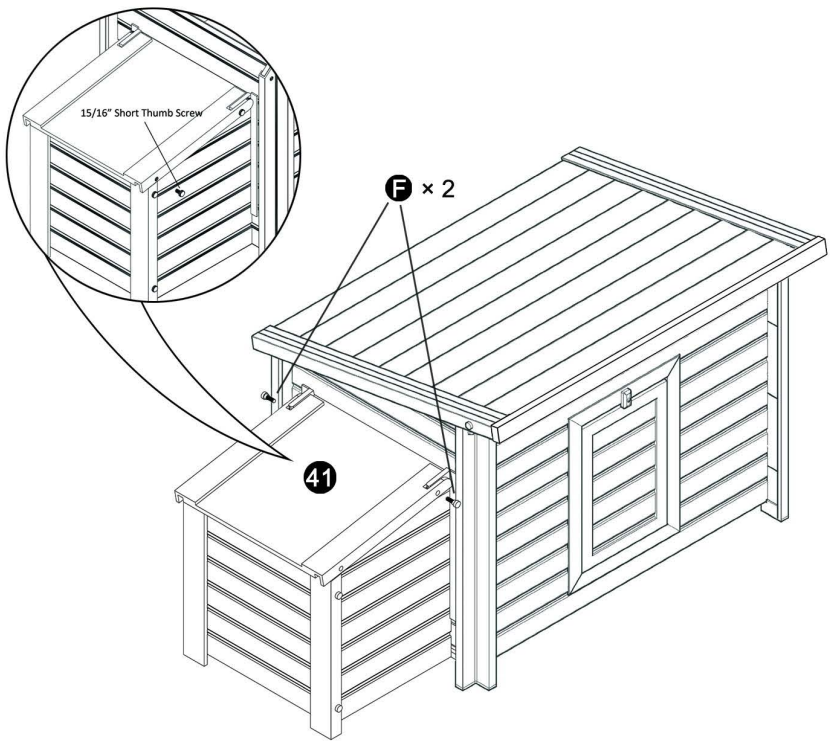

To lock the nesting box, insert the 15/16" Thumb Screw into a hole on the side of the cover of the nesting box. Screw all the way in. Remove the Thumb Screw when to open and retrieve eggs.

Complete

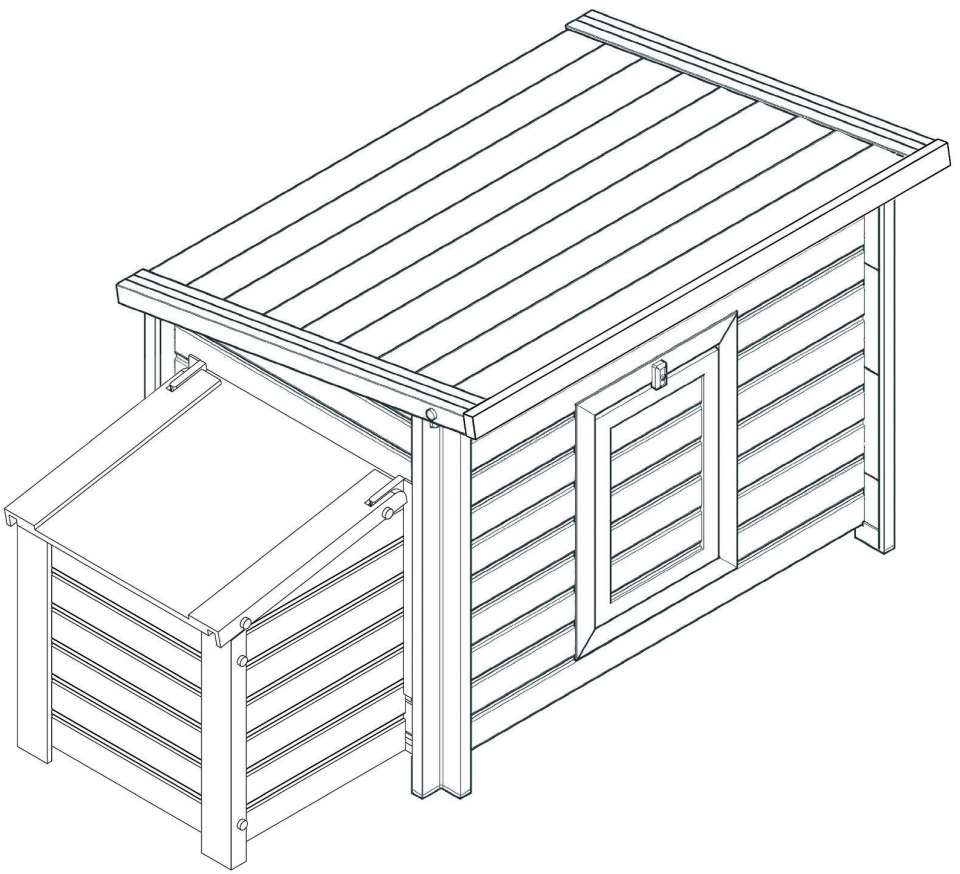

Cleaning Instruction

It is very important to keep the barn clean for healthy chickens. The Easy to Assemble design will be appreciated when it is time to clean.

Remove one or more roof panels by reversing step 28 and 27 of the assembly instruction. You now have access to the entire inside of the house.

We recommend using a detergent with strong grease cutting capabilities and safe to use around you, your kids and the chickens. After washing, rinse and then wipe down the panels. Don’t forget to clean the inside of the roof panels. Allow the interior to air dry thoroughly and reassemble.

Once the house is clean and dry, re-assemble the roof panels.