Edit Image

Size: inch

FRONT SIZE

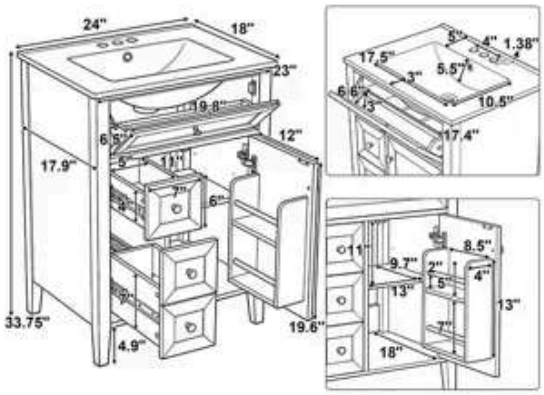

Size: inch

BACK SIZE

