Wardrobe+Desk /garde-robe + bureau

Assembly Instructions - Please keep for future reference

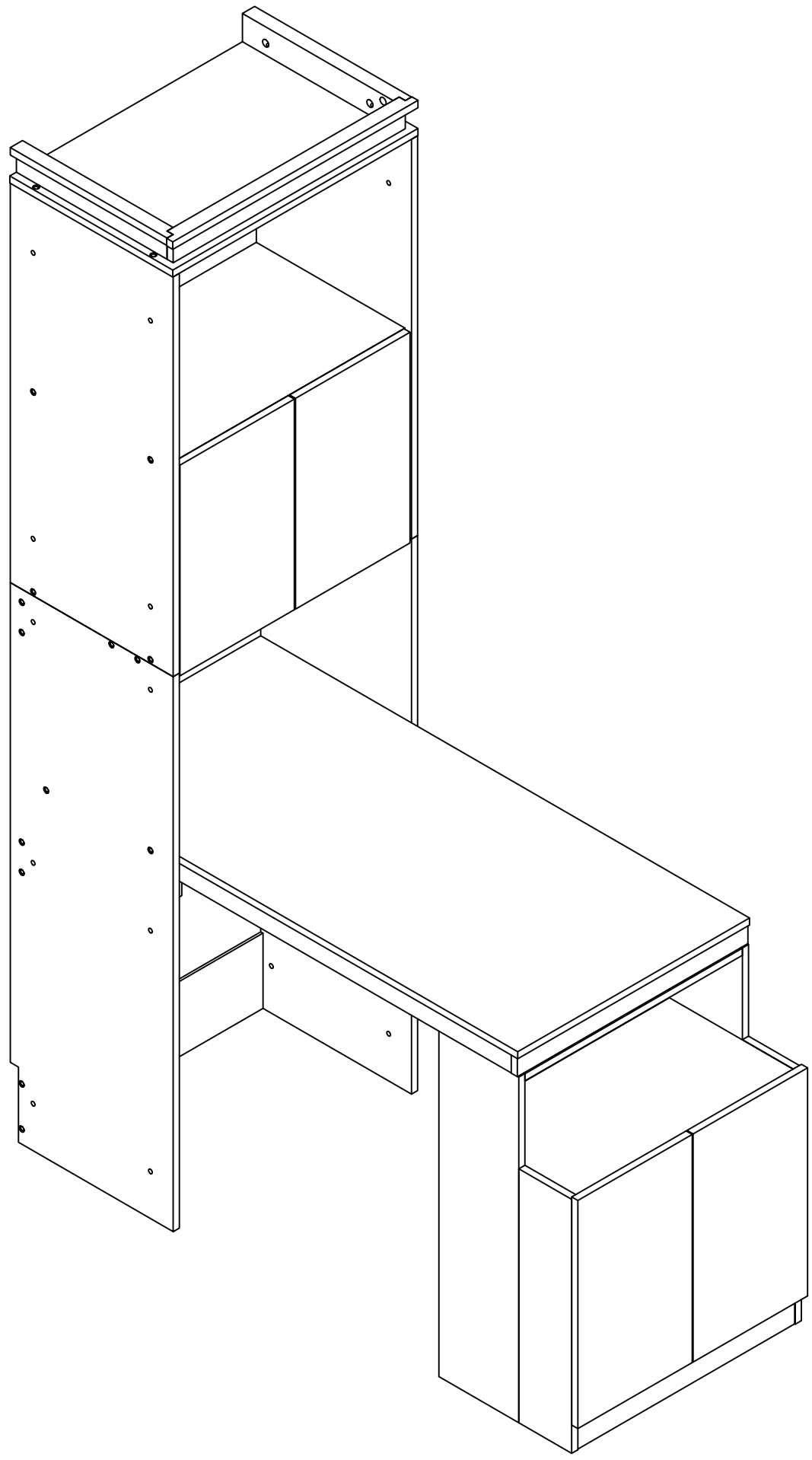

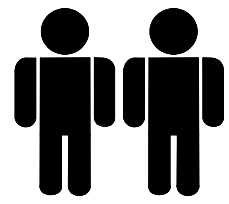

Three people are required to assemble and move this model.

Important – Please read these instructions fully before starting assembly

Safety and Care Advice

Important – Please read these instructions fully before starting assembly

• Check you have all the components and tools listed on the following pages.

• Remove all fittings from the plastic bags and separate them

• Keep children and pets away from the installation area, which may cause choking if small parts are swallowed.

• Make sure you have enough space to layout the parts before

• Do not stand or apply weight to the product during assembly. This may cause damage.

• Assemble the item as close to its final position (in the same room) as possible.

• Assemble on a soft level surface to avoid damage to the unit or floor.

• It's easier for two people to assemble the parts together.

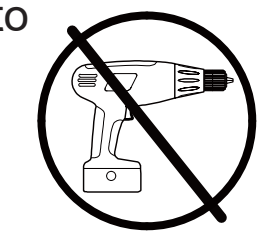

• To reduce the likelihood of damage to your product, make sure your power drill is set to a low torque setting.

Care and maintenance

• Only clean using a damp cloth and mild detergent, do no use bleach or abrasive cleaners.

• Check for loose screws on this unit from time to time.

• This product should not be discarded with household waste. Take to your local authority waste disposal centre.

Handy Hints

• Assemble all parts and bolts loosely during assembly, only once the product is complete should you fully tighten the bolts

• Regularly check and ensure that all bolts and fittings are correctly tightened.

WARNING
In order to help prevent overturning – please follow these instructions

To help prevent product toppling over please follow the below steps:-

Use the anti tip stap or wall fixing method provided (if applicable)
Do not allow children to climb or hang on the furniture
Do not open more than one drawer at a time
Do not place heavy items in the top drawers
Do not place heavy items on top of the furniture, unless the furniture has been designed for this purpose

please note that only the anti tip strap is provided.
You will need to provide wall plugs and screws applicable for your wall type

Using Camlocks

Step 1

1 DO NOT OVER TIGHTEN.

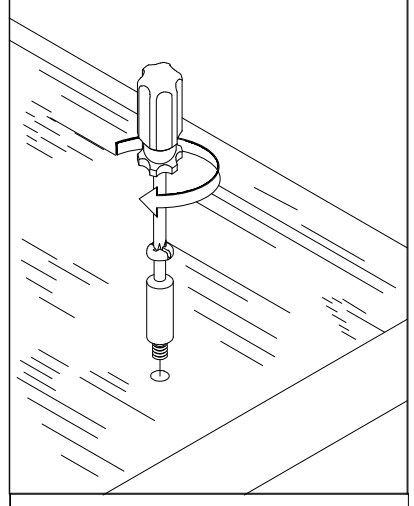

Step 2

2

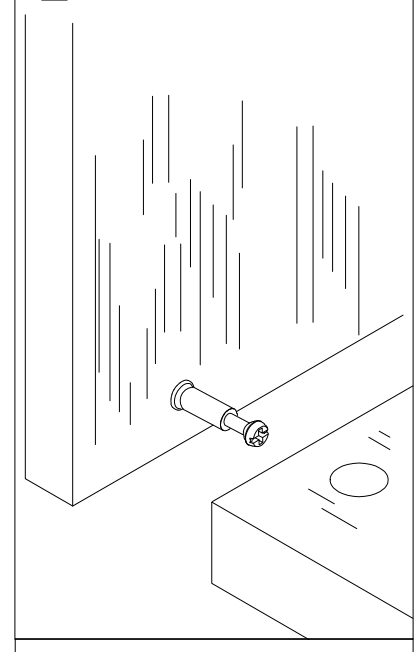

Step 3

3

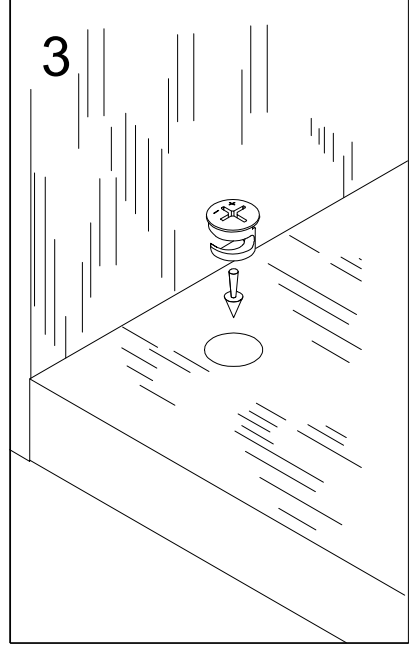

Step 4

4

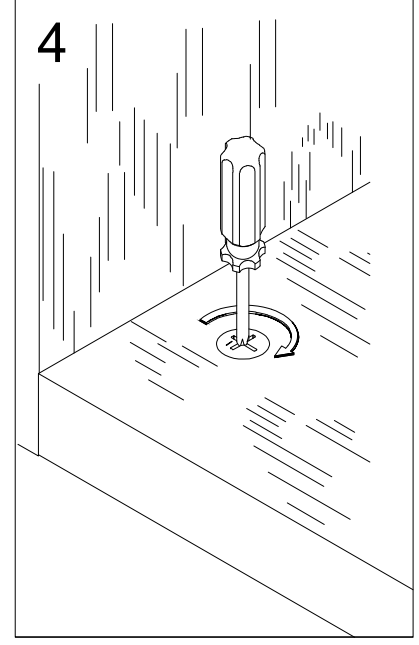

Assembly Instructions

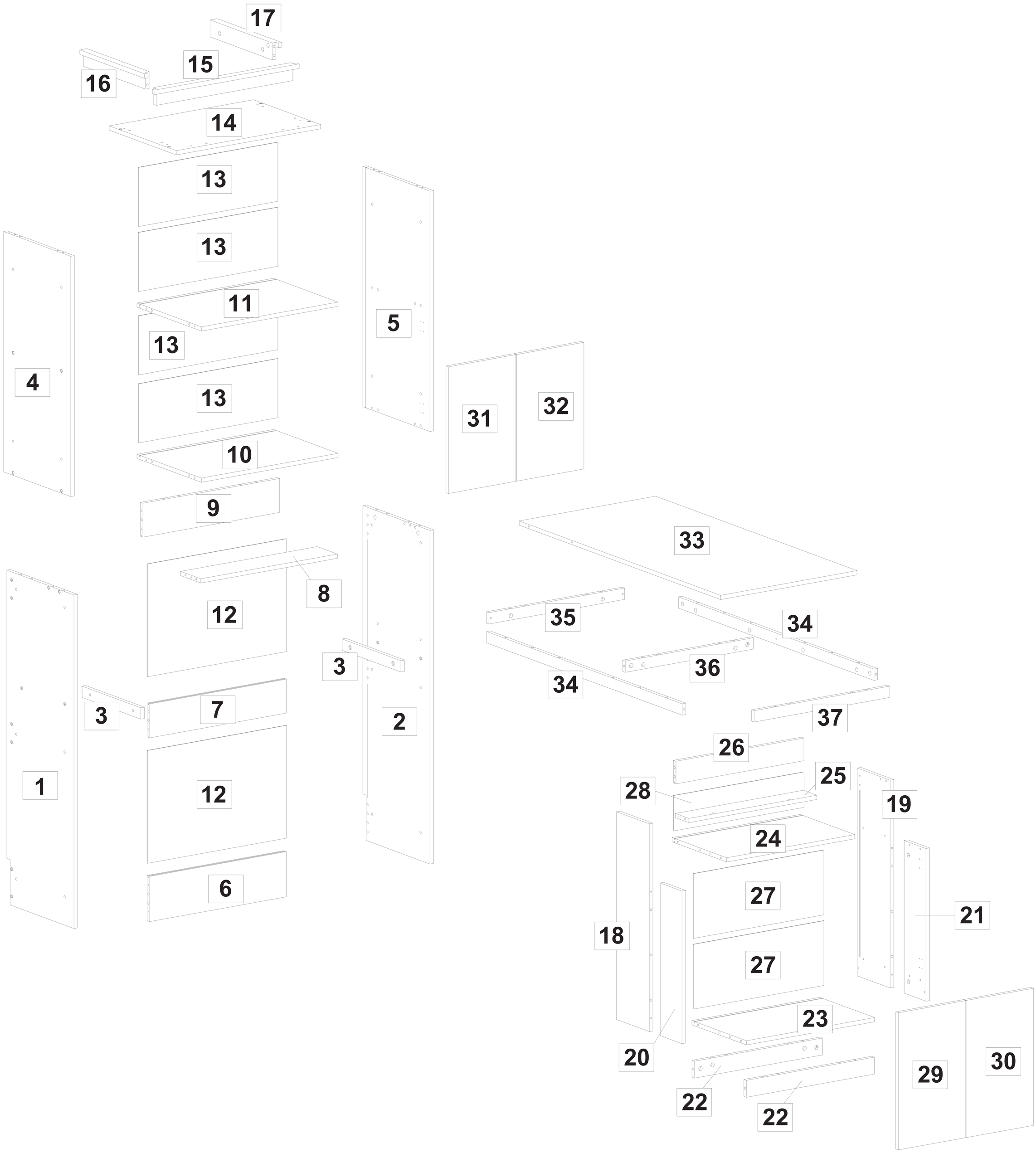

Part List

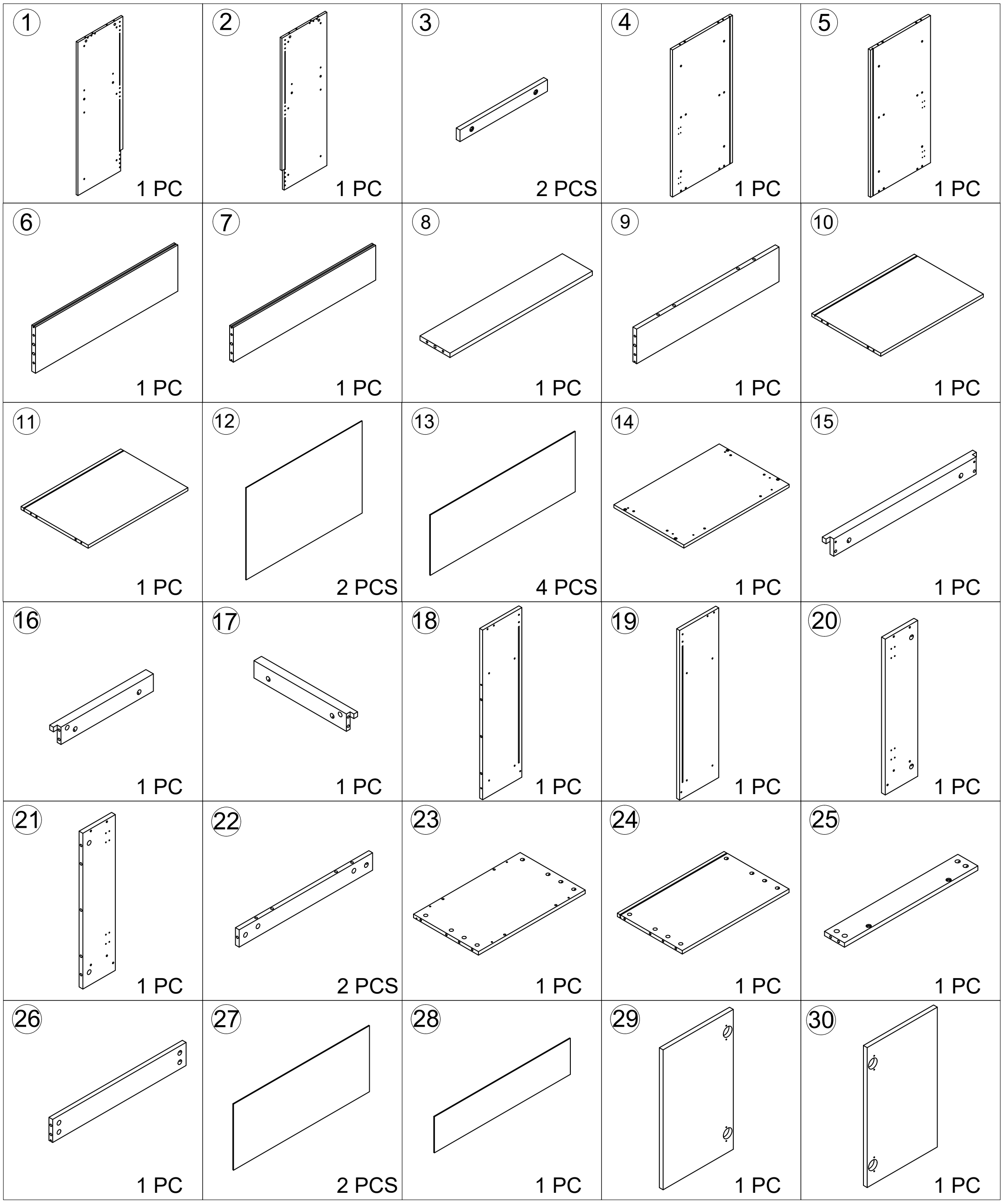
1
1 PC
2
1 PC
3
2 PCS
4
1 PC
5
1 PC
6
1 PC
7
1 PC
8
1 PC
9
1 PC
10
1 PC
11
1 PC
12
2 PCS
13
4 PCS
14
1 PC
15
1 PC
16
1 PC
17
1 PC
18
1 PC
19
1 PC
20
1 PC
21
1 PC
22
2 PCS
23
1 PC
24
1 PC
25
1 PC
26
1 PC
27
2 PCS
28
1 PC
29
1 PC
30
1 PC

Part List

31 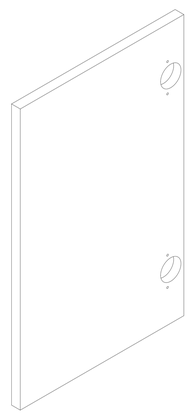 1 PC	32 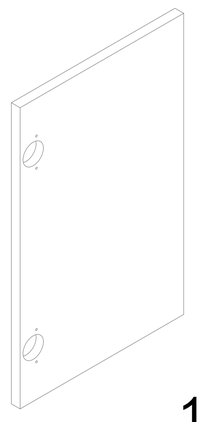 1 PC	33 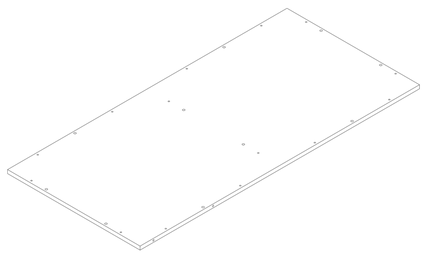 1 PC	34 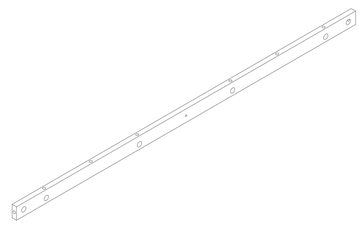 2 PCS	35 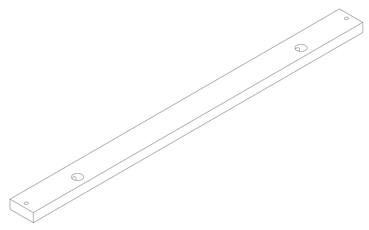 1 PC
36 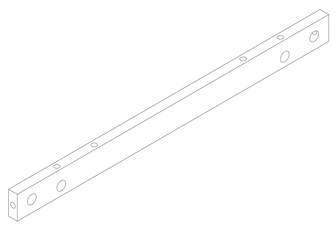 1 PC	37 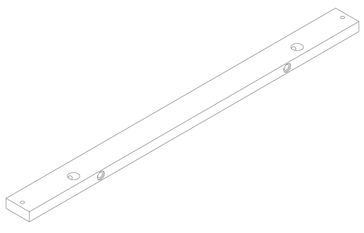 1 PC	38 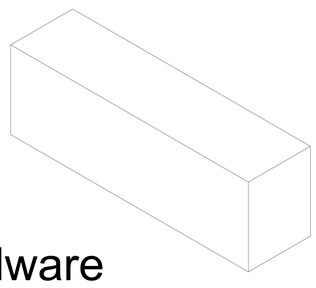 Hardware Matériel informatique 1 PC		

Hardware list

Please check you have all the panels listed below
Veuillez vérifier que vous avez tous les panneaux énumérés ci-dessous

Note: The quantitie below are the correcet amount to complete the assembly. In some cases more fittings may be supplied than are required.

Remarque: La quantité ci-dessous est la quantité correcte pour compléter l'assemblage. Dans certains cas, plus de raccords. Peut être fourni que sont requis.

A Male Camlock x 70 Mâle Camlock	**B** Female Camlock x 70 Femelle Camlock	**C** 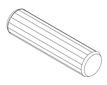 Dowel (8x30) x 56 Le goujon
D 6*48mm Screw x 32 6*50mm vis	**E** 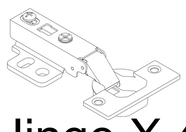 Door Hinge X 4 Charnière de porte	**F** 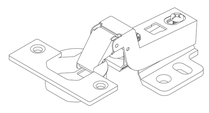 Door Hinge X 4 Charnière de porte
G 3.5*14mm Screw x 48 3.5*14mm vis	**H** 6*20mm Screw x 6 6*20mm vis	**I** Back Panel Stiffener x 30 Panneau arrière raidisseur
J 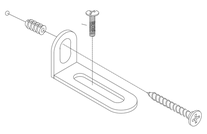 Wall Fixing Pack x 2	**K** Ø20 Sticker x 40	**L** 569mm x 2
M 533mm x 1	**N** 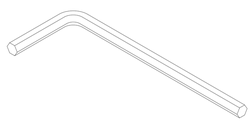 Hex Key M4 x 1	**O** Nut x 10 noix
P 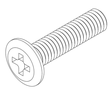 6*25mm Screw x10		

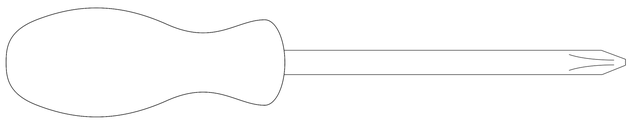

Assembly Tools Required (Not Included)

Assembly Instructions

Step 1

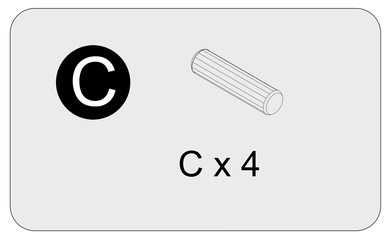

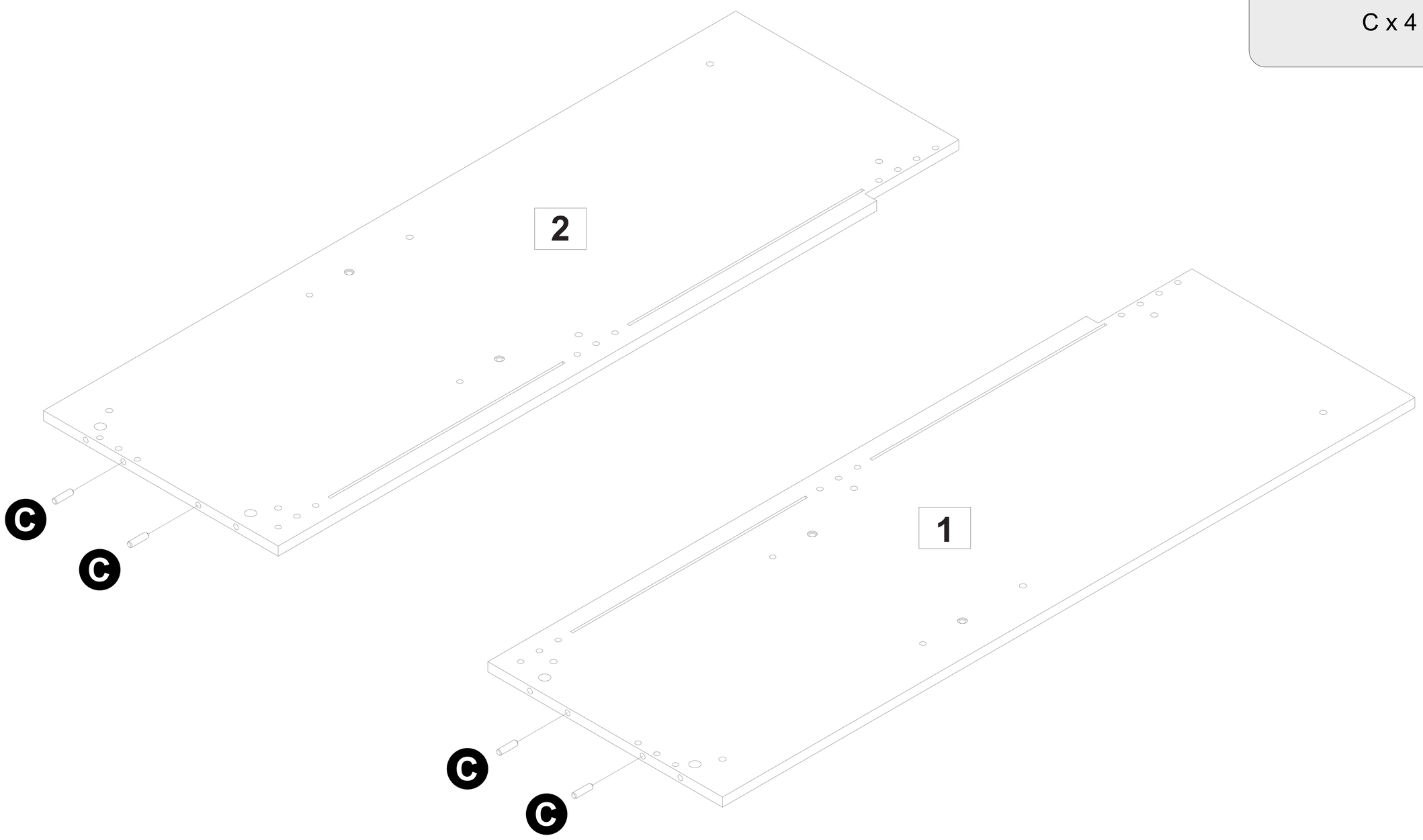

Step 2

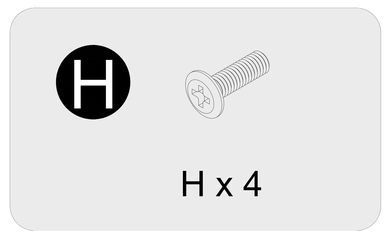

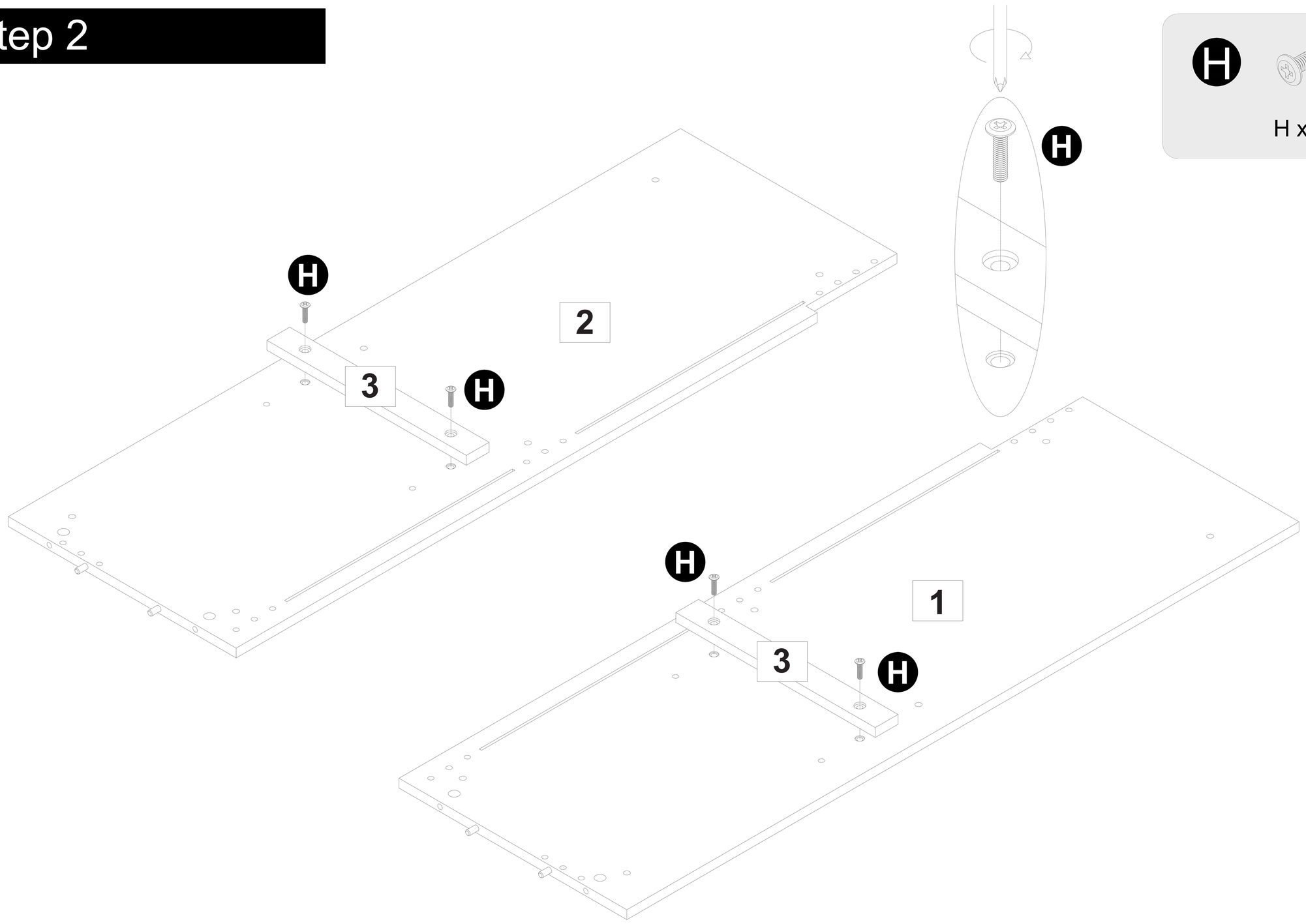

Assembly Instructions

Step 3

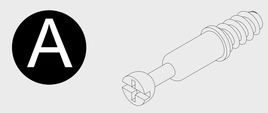

A x 4

C x 4

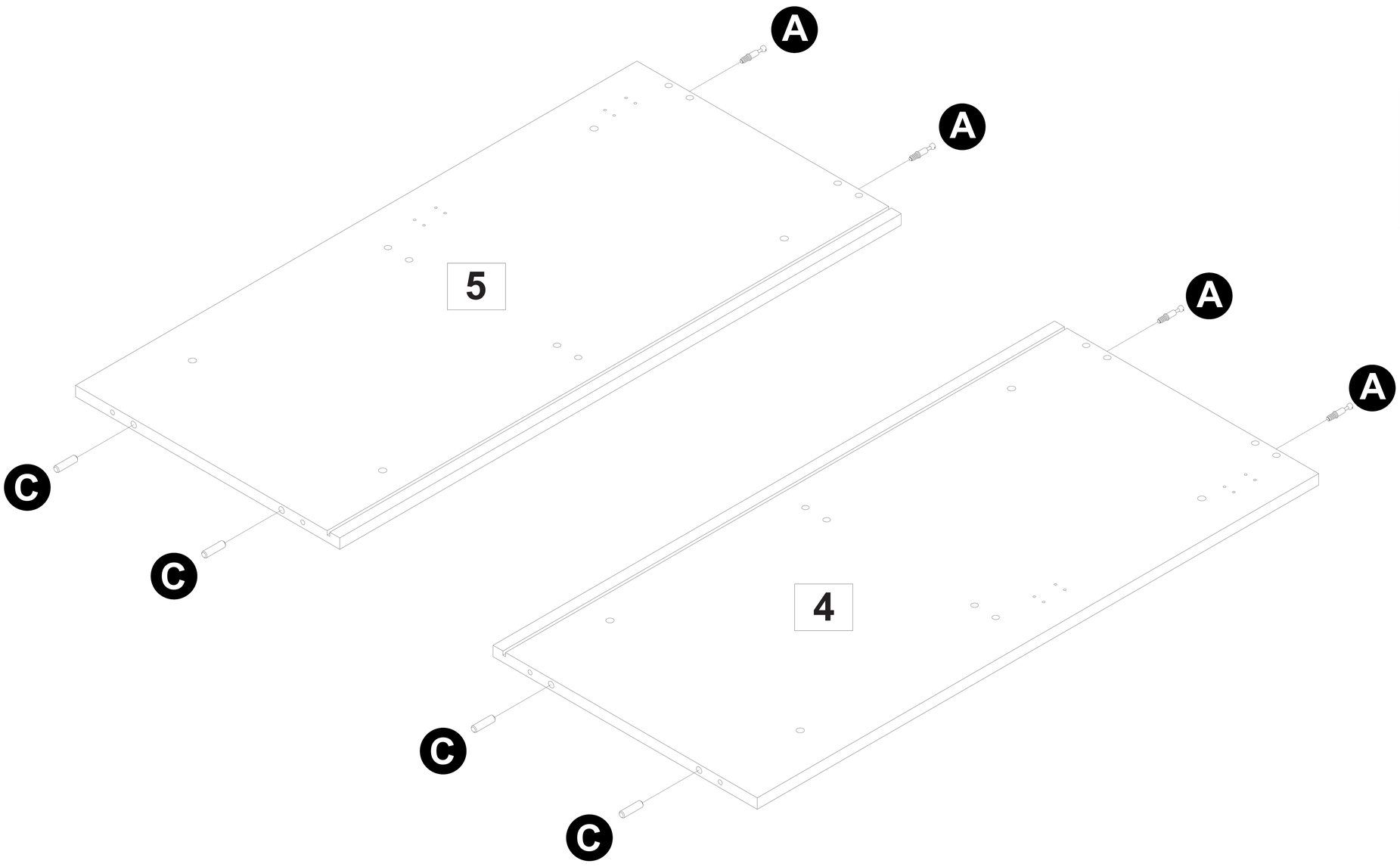

Step 4

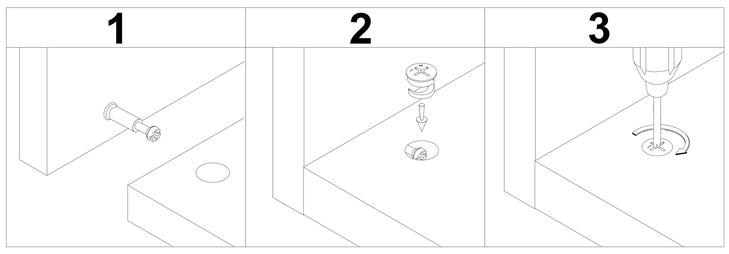

B x 4

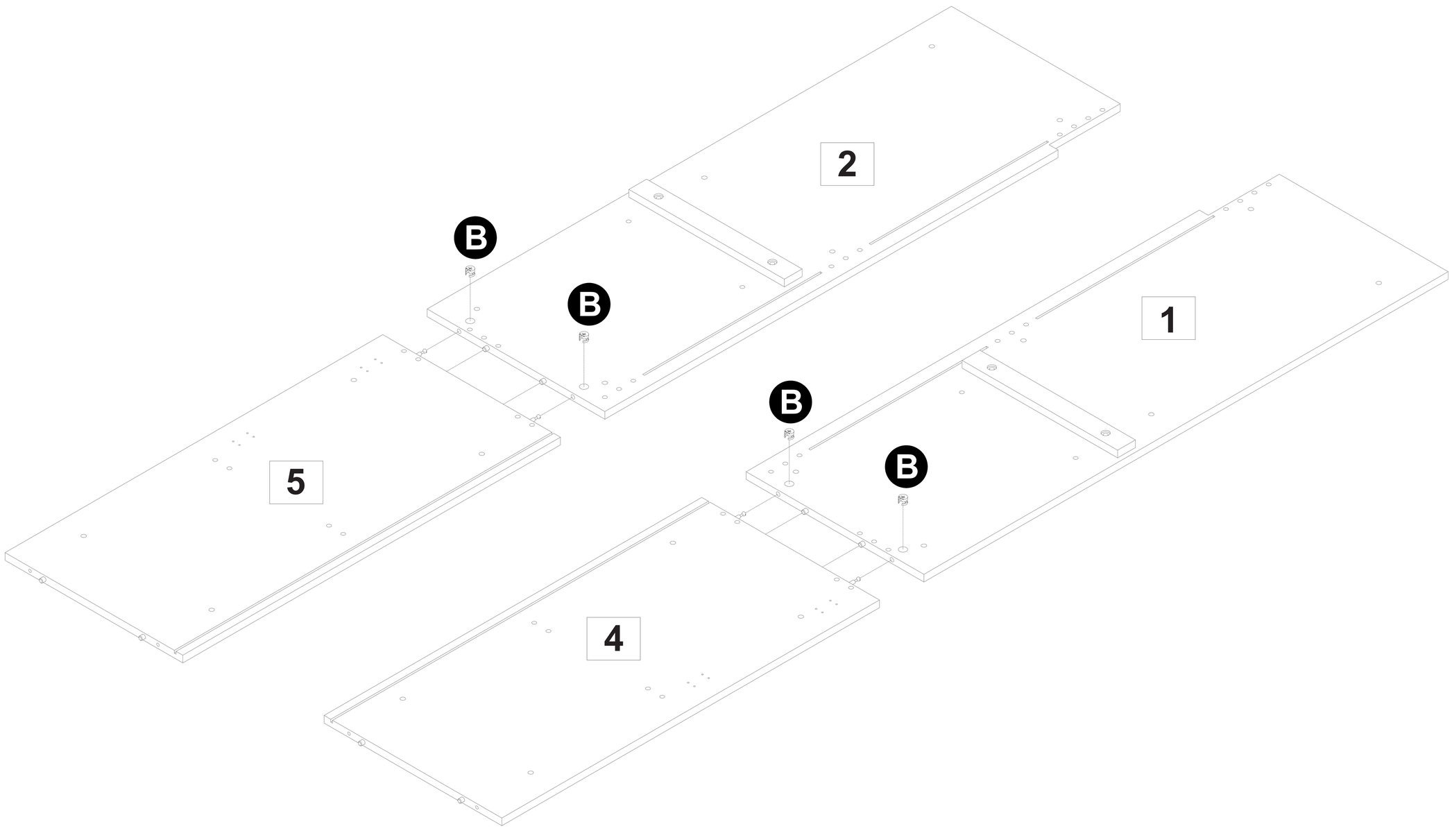

Assembly Instructions

Step 5

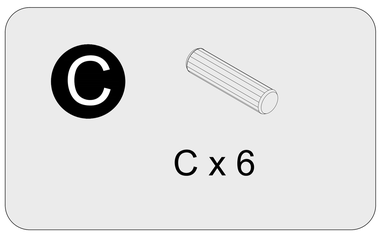

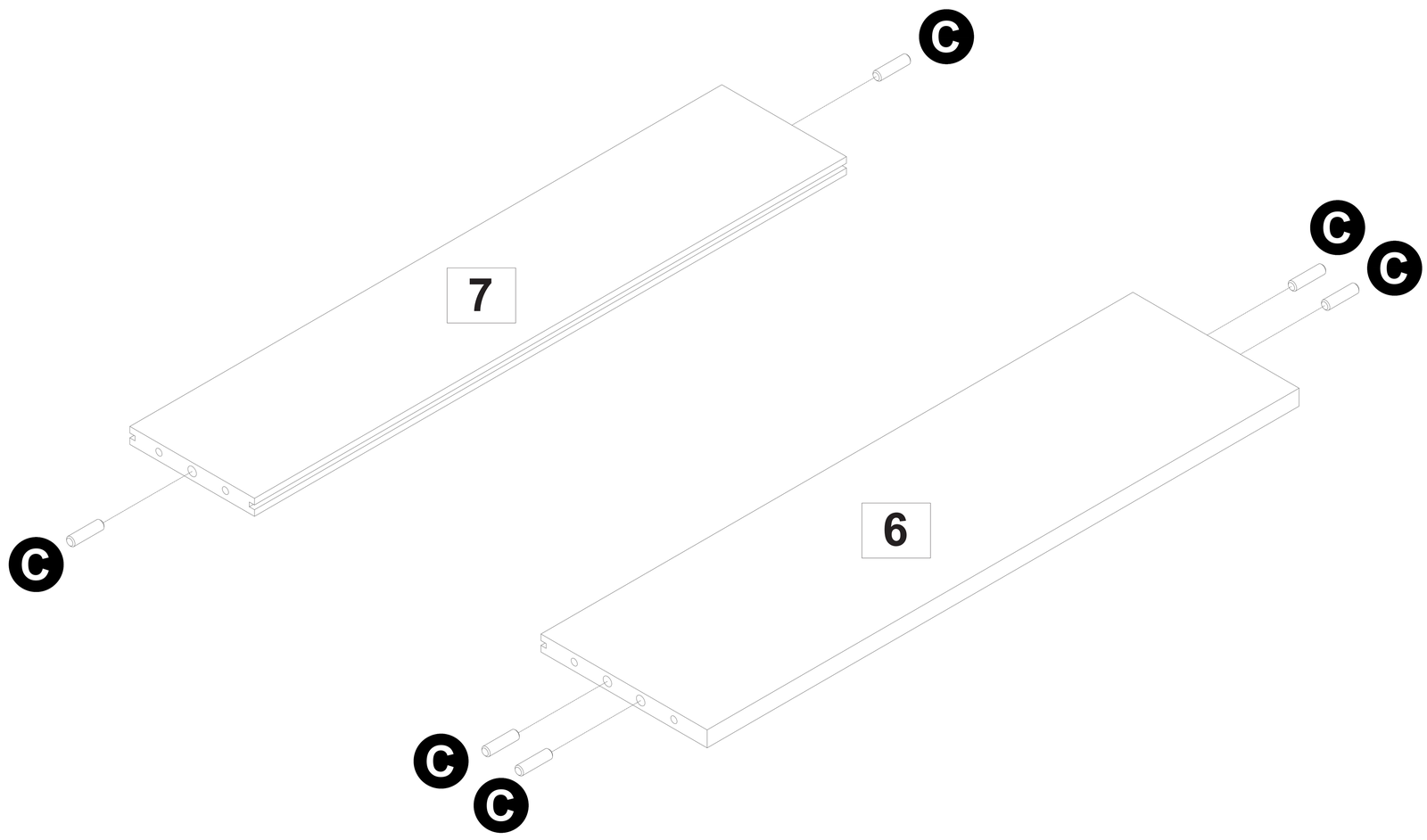

Step 6

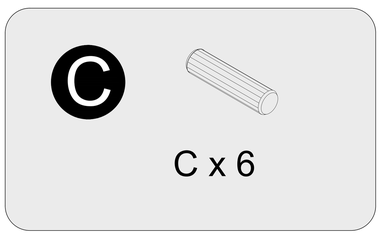

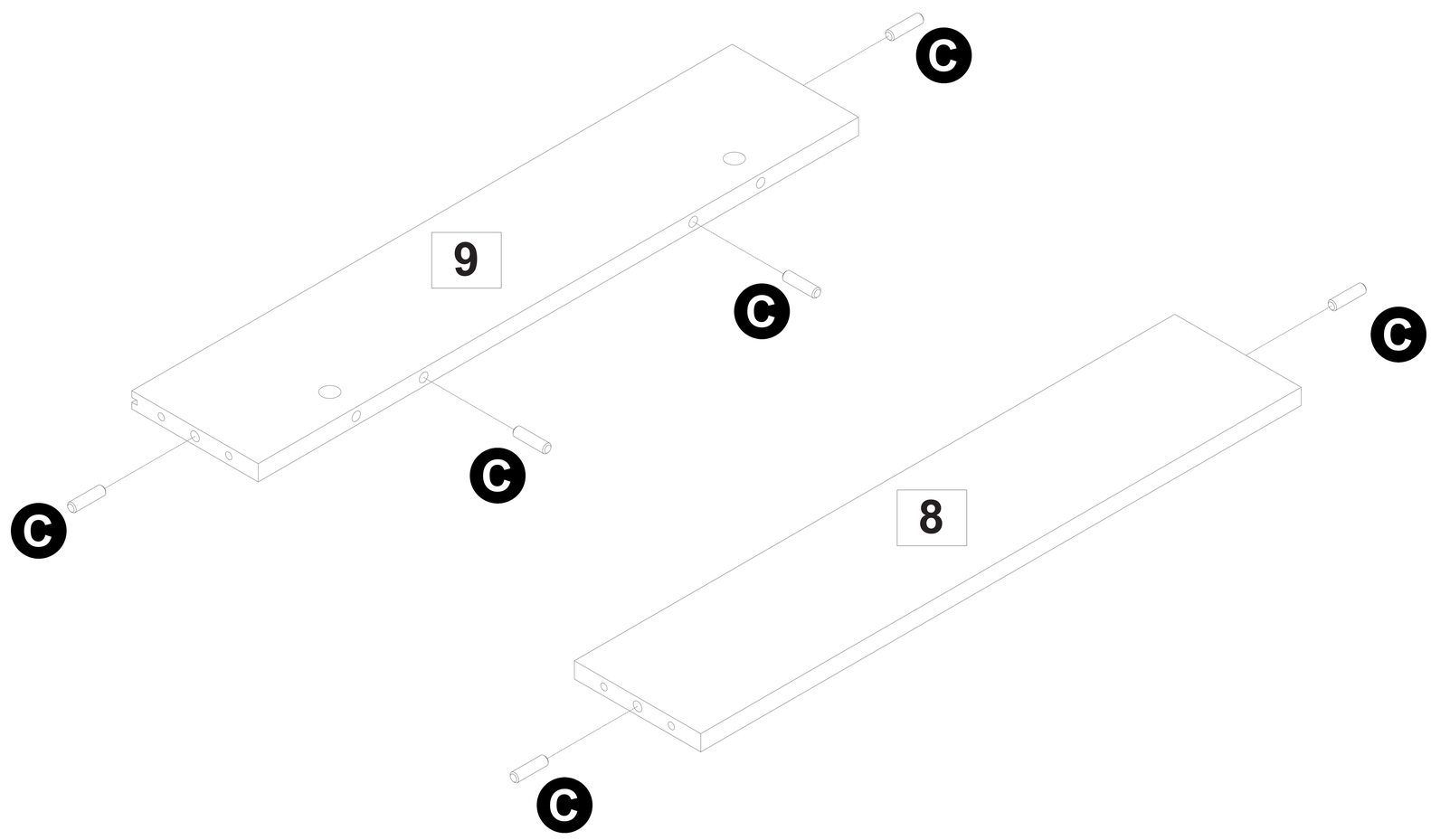

Assembly Instructions

Step 7

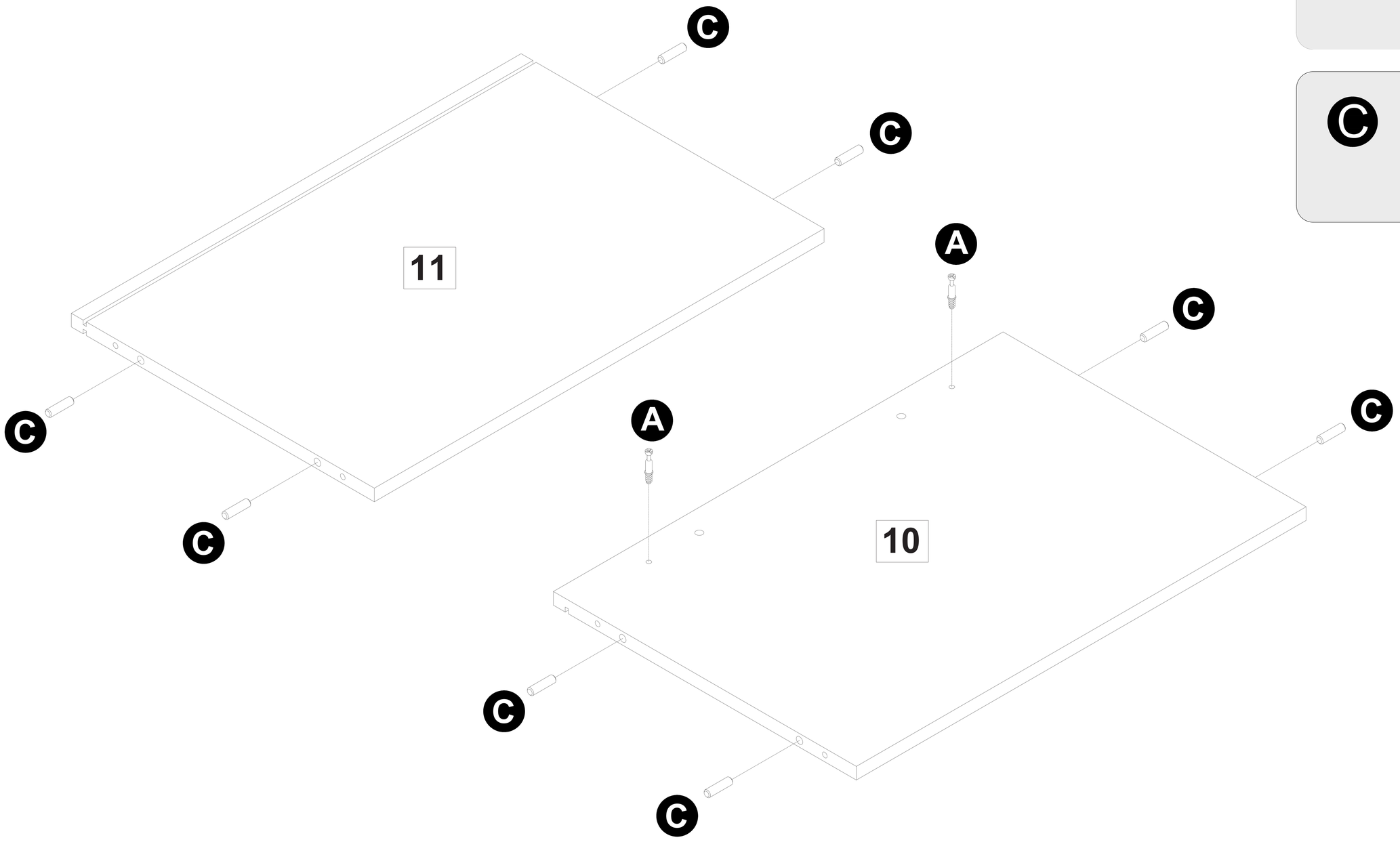

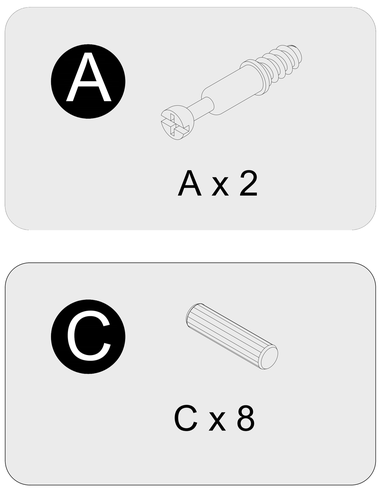

Step 8

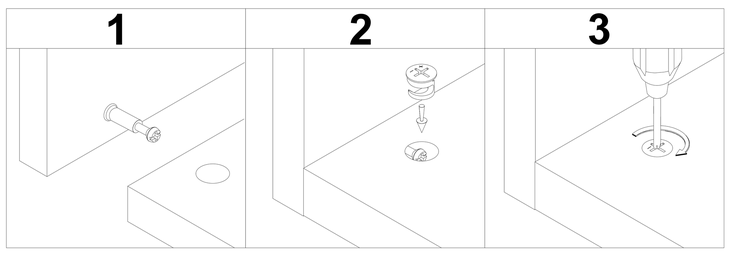

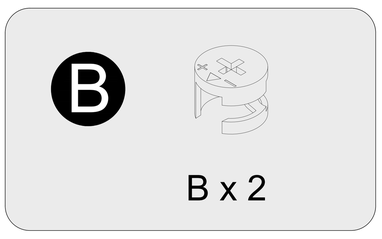

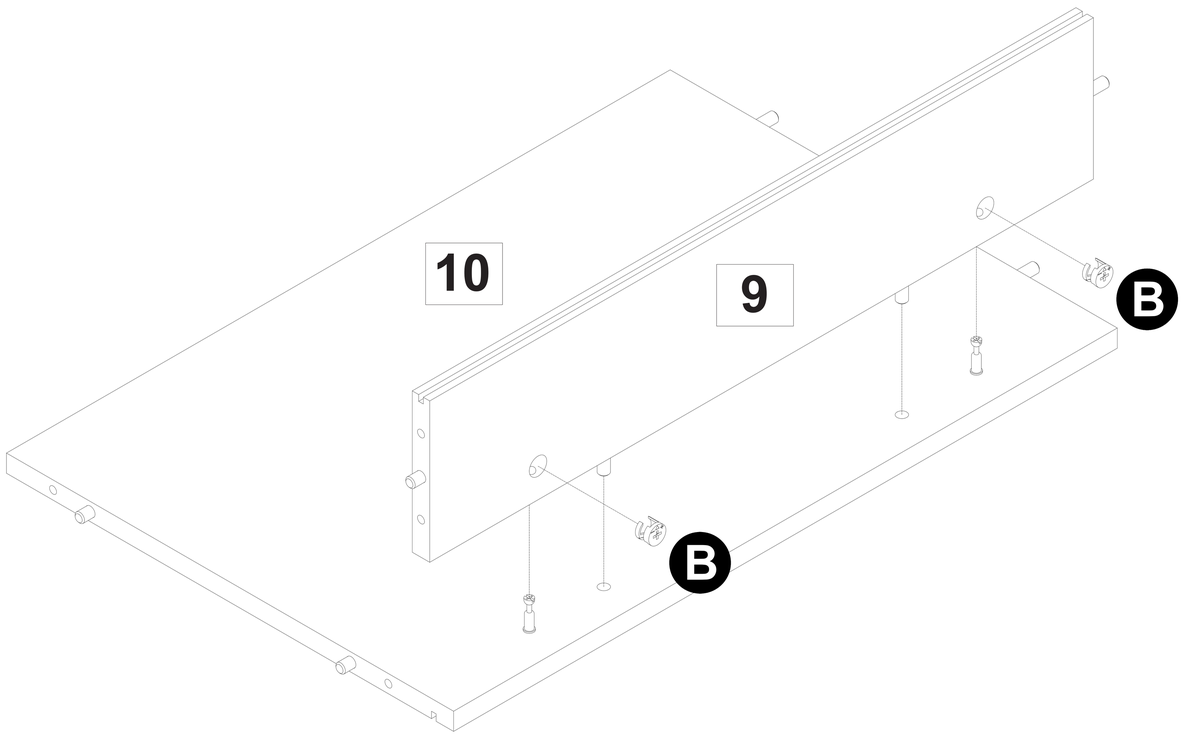

Assembly Instructions

Step 9

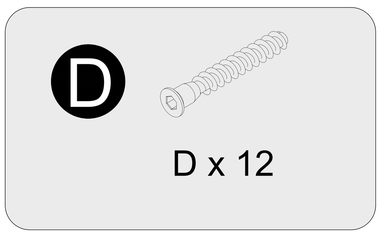

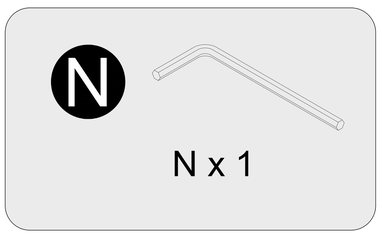

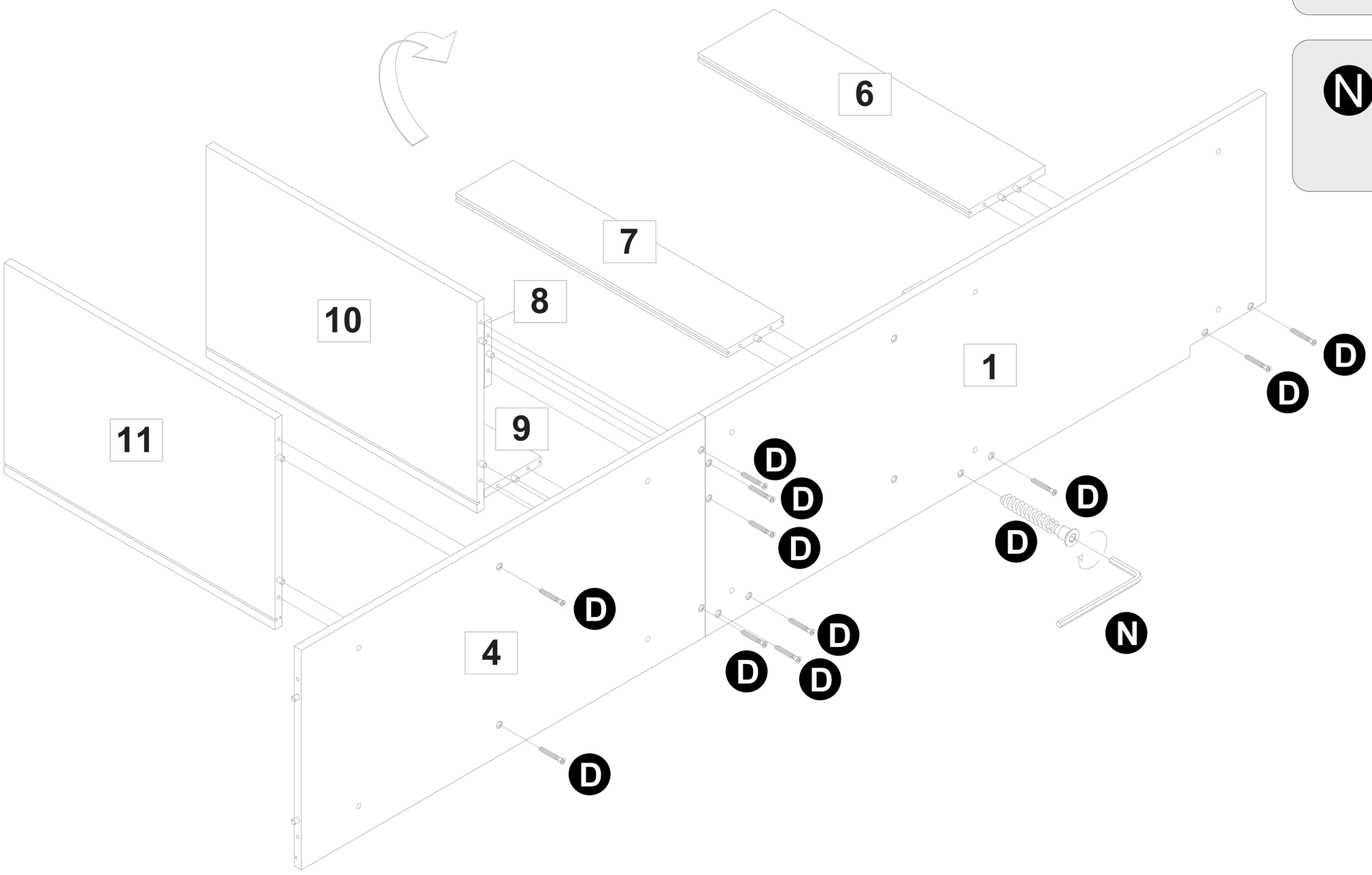

Step 10

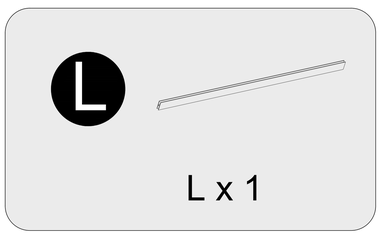

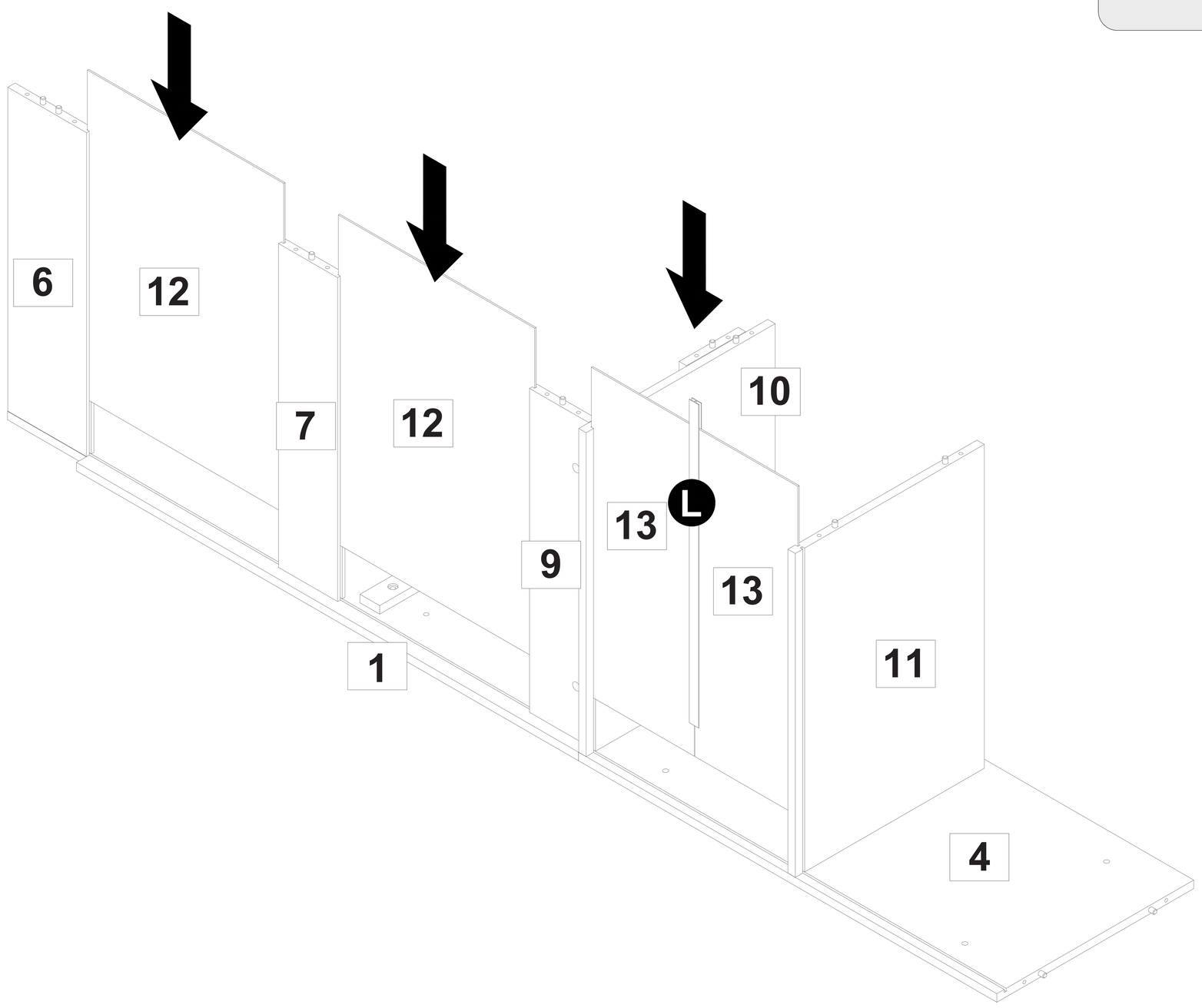

Assembly Instructions

Step 11

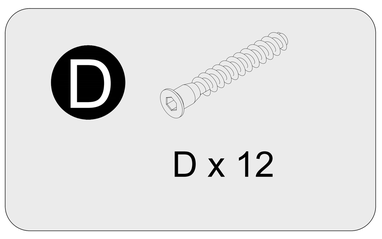

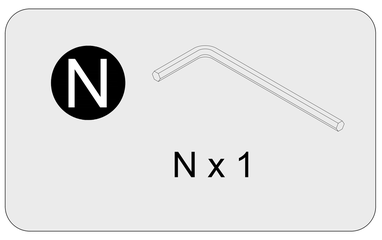

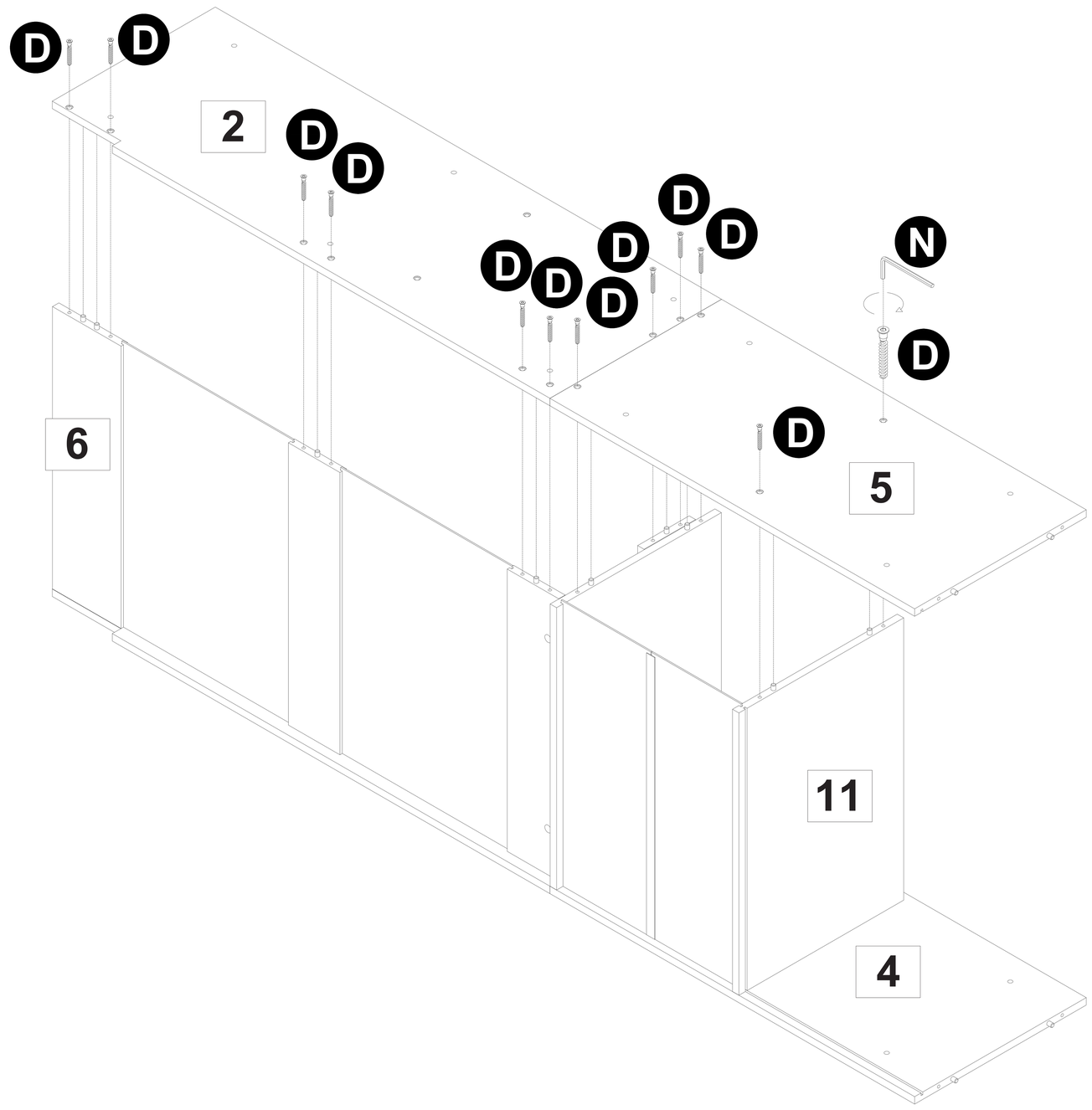

Step 12

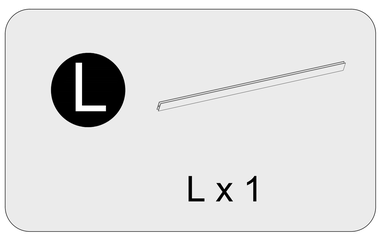

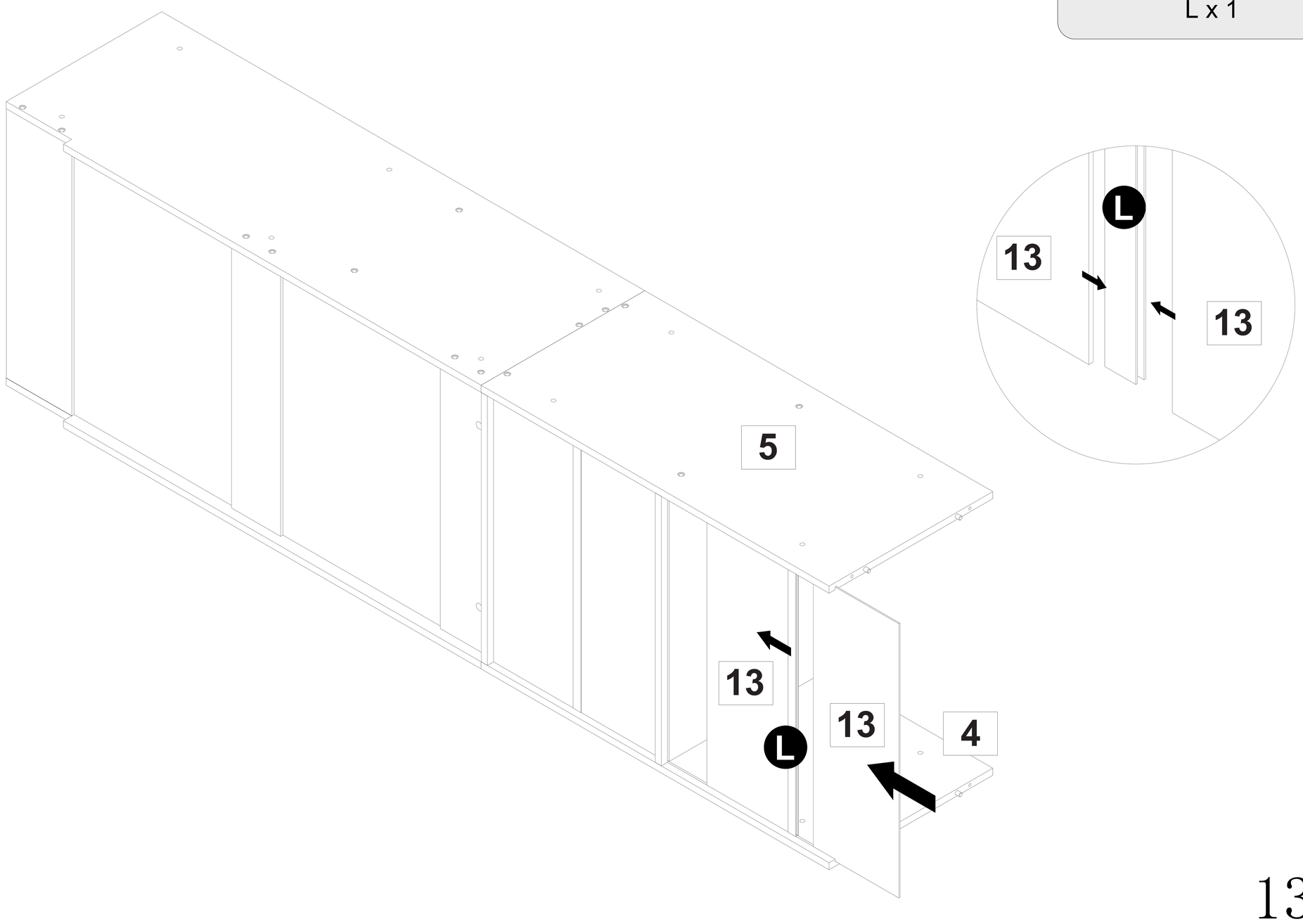

Assembly Instructions

Step 13

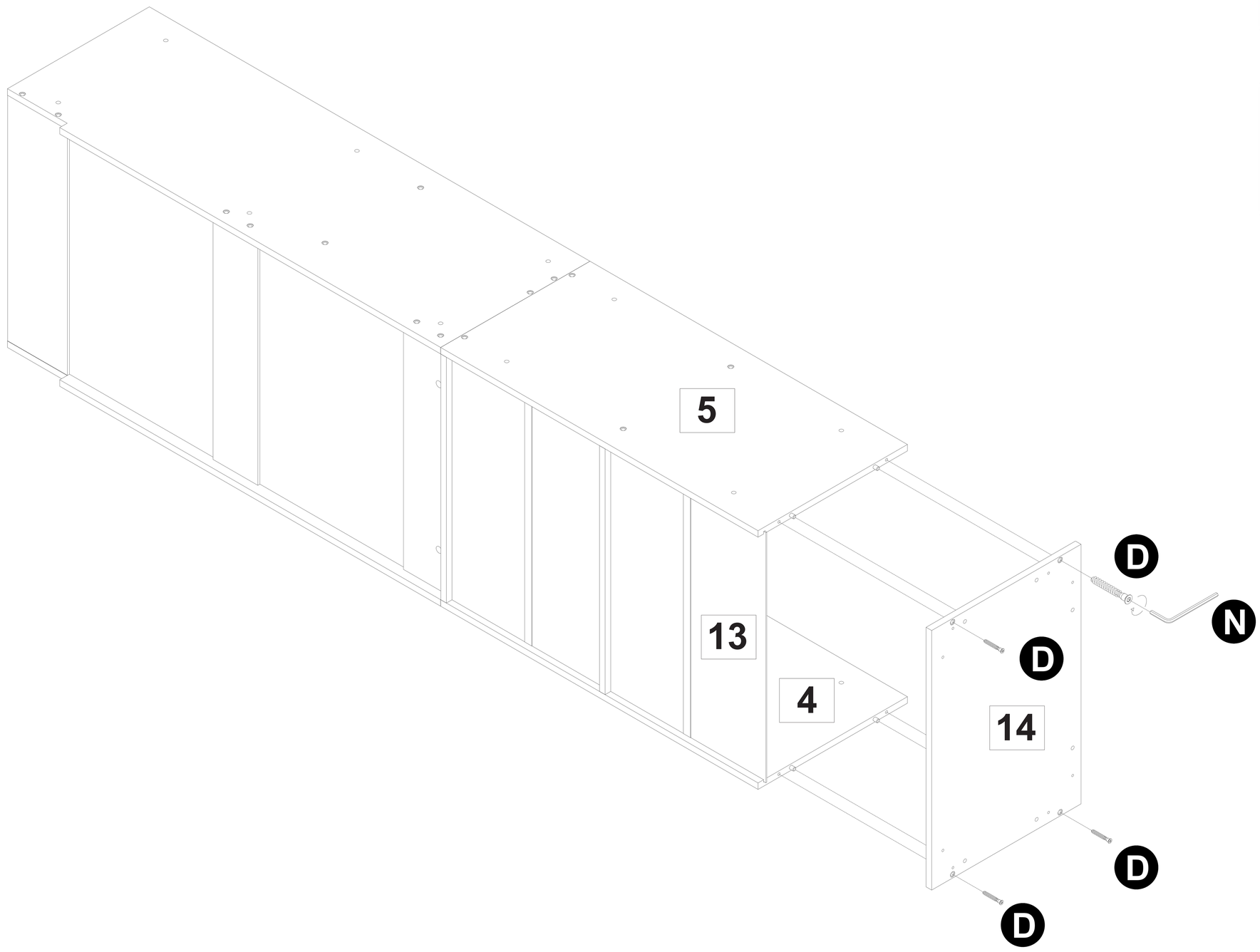

Step 14

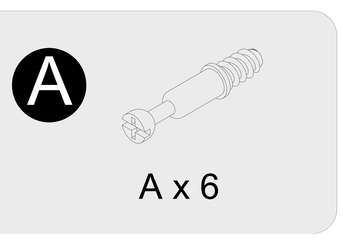

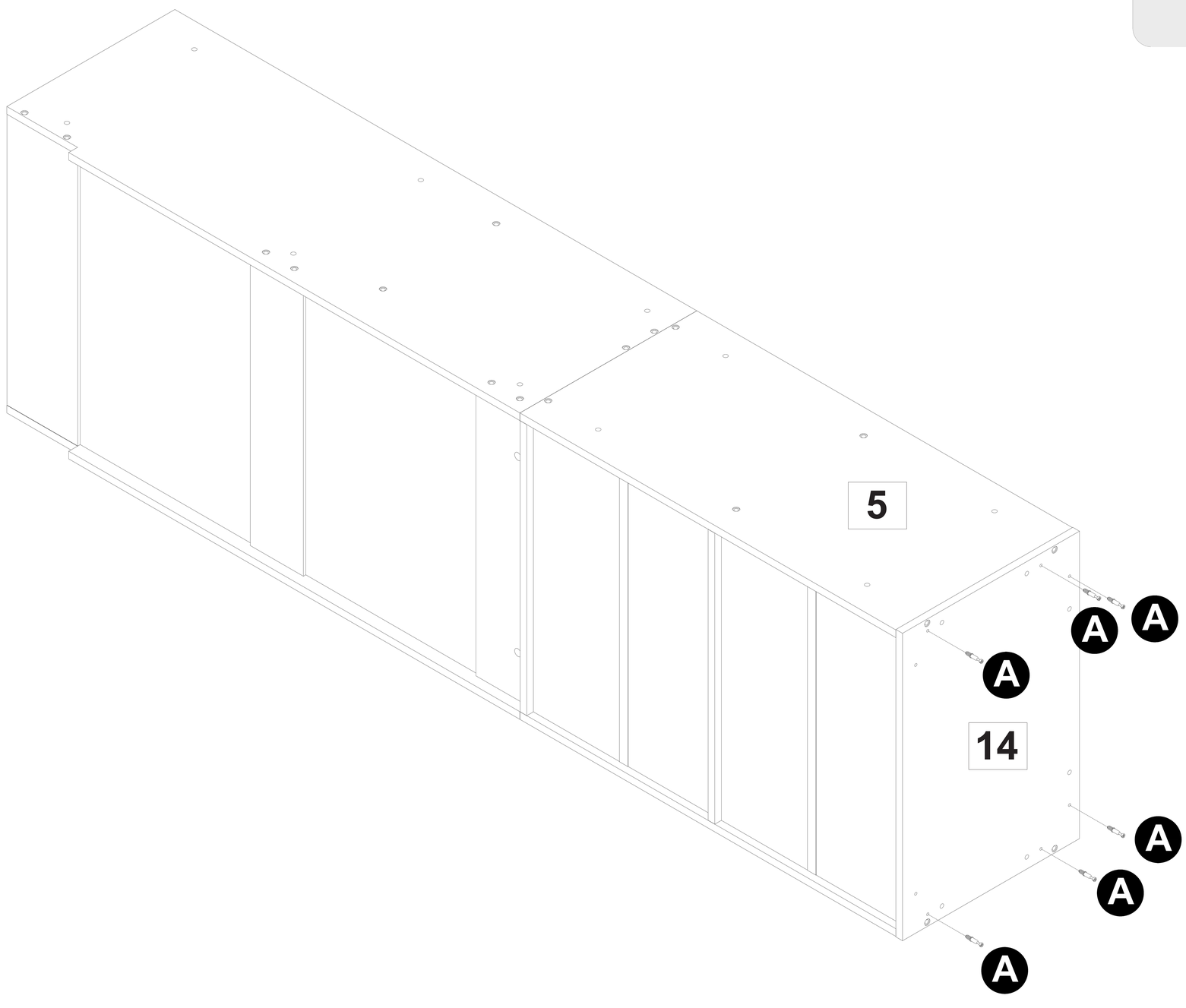

Step 15

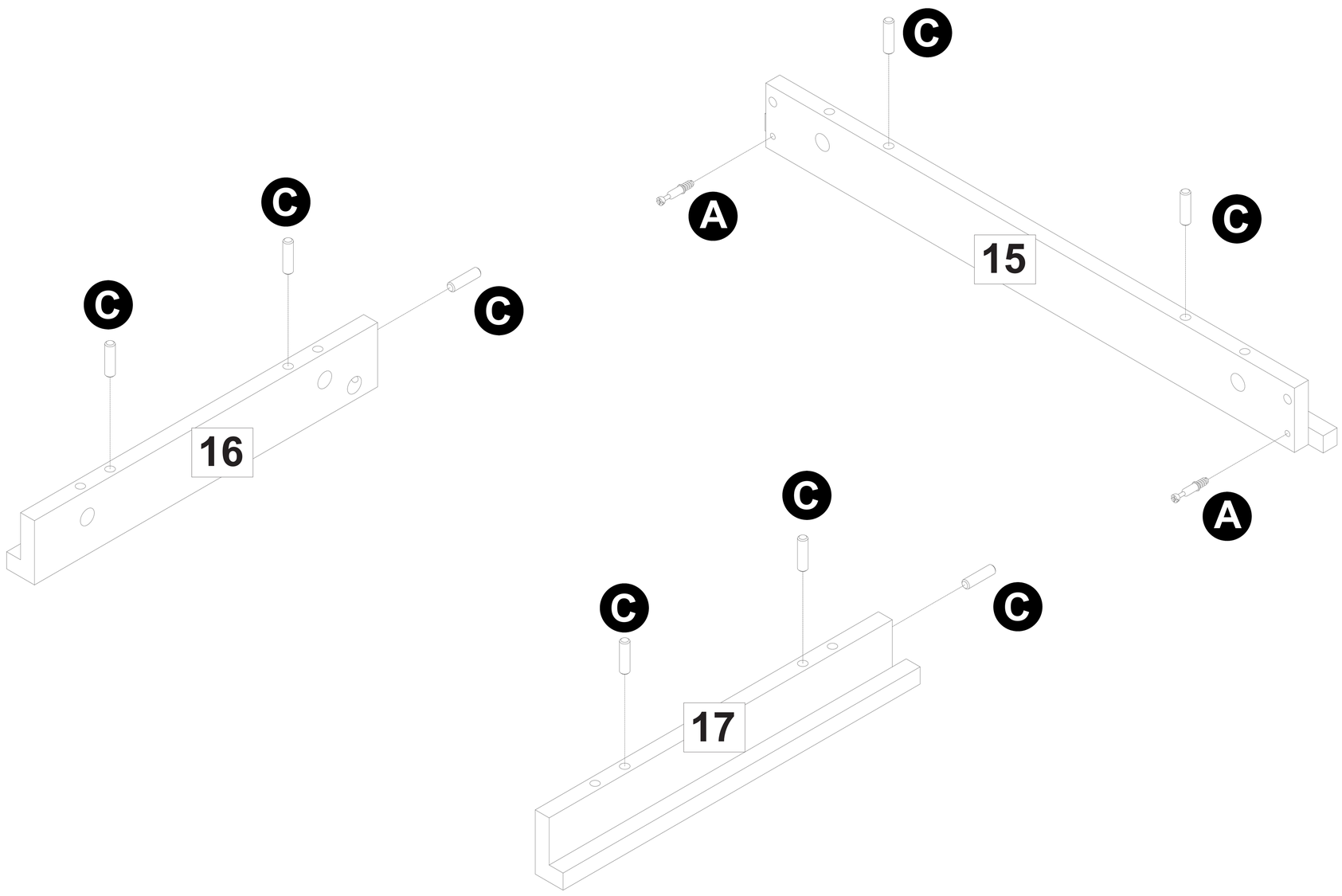

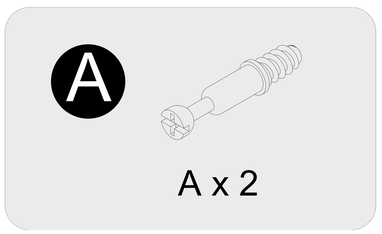

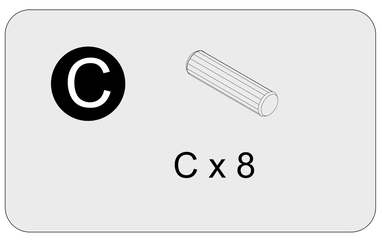

Step 16

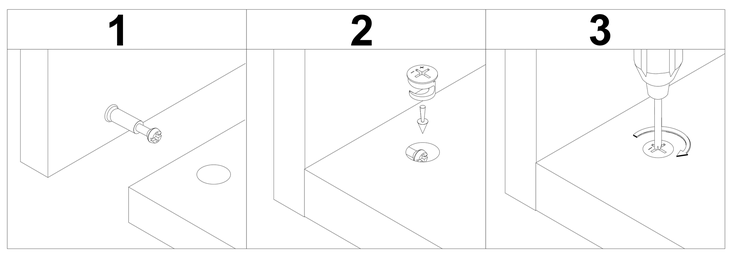

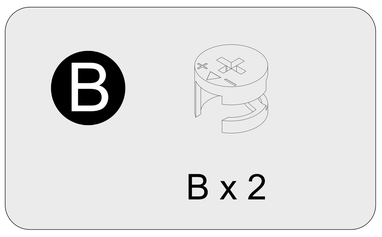

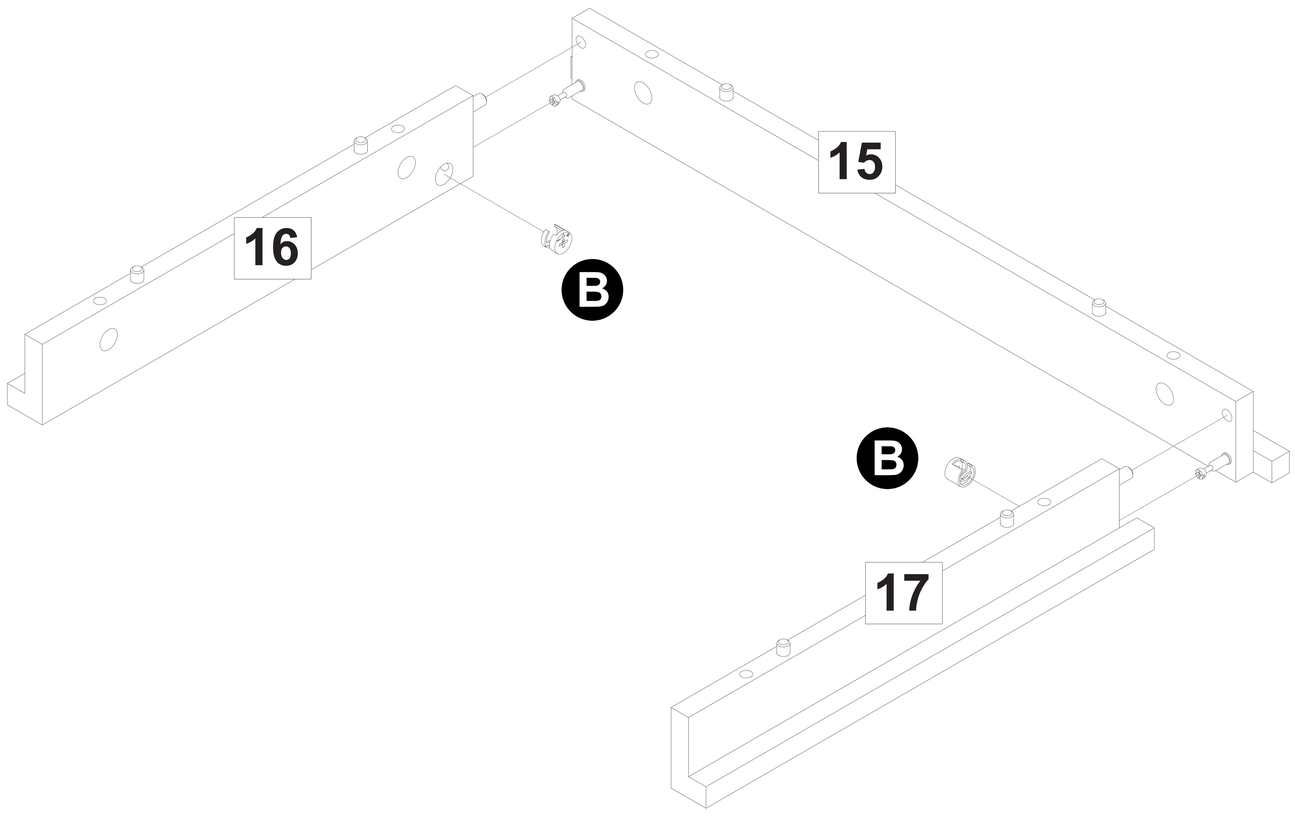

Step 17

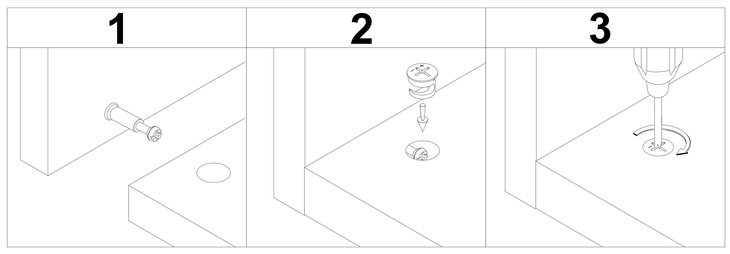

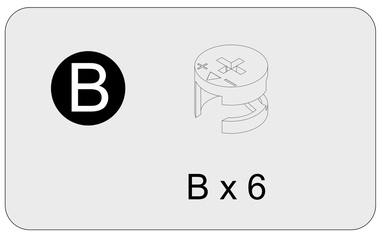

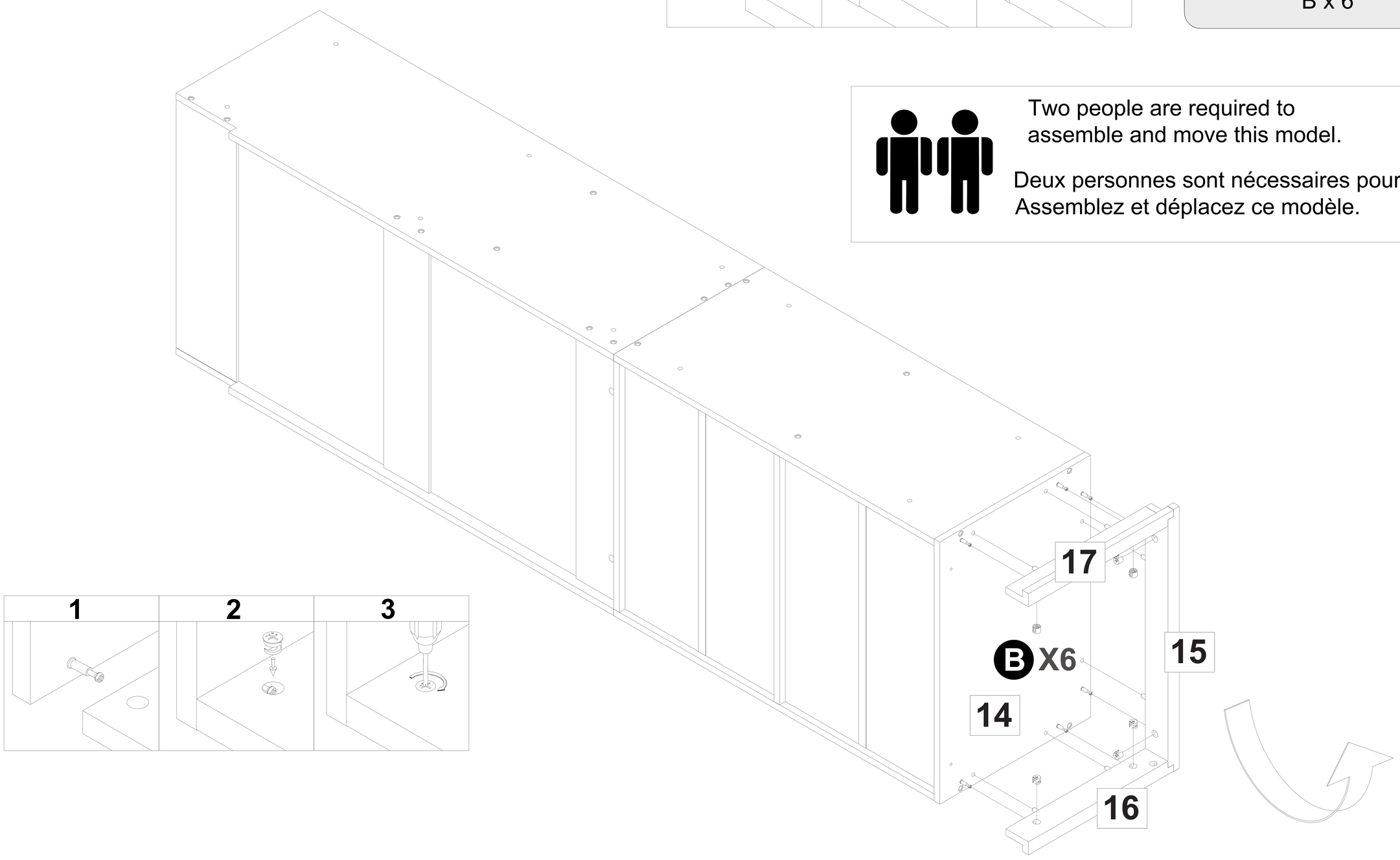

Step 18

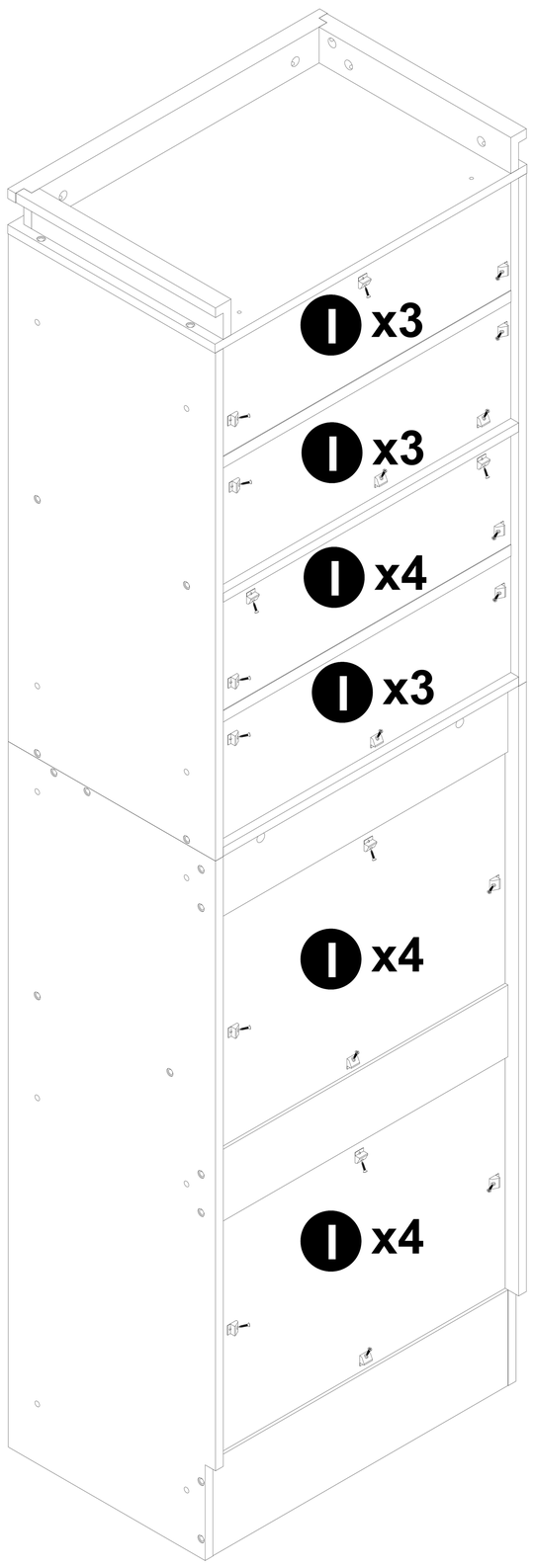

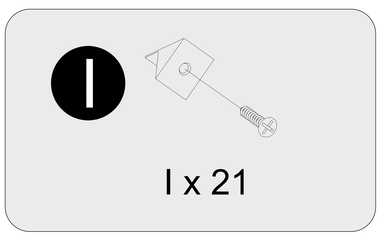

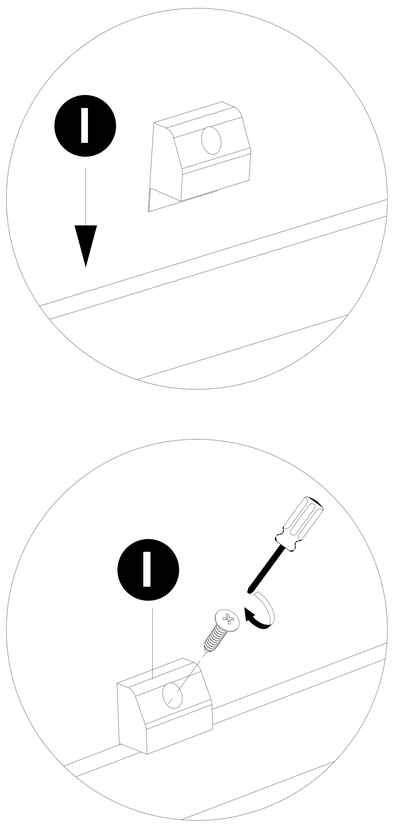

Step 19

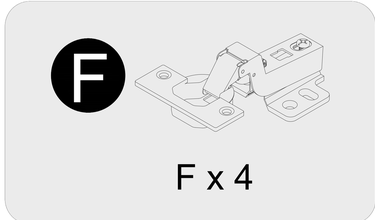

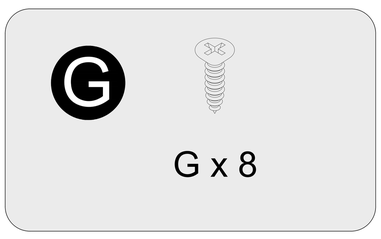

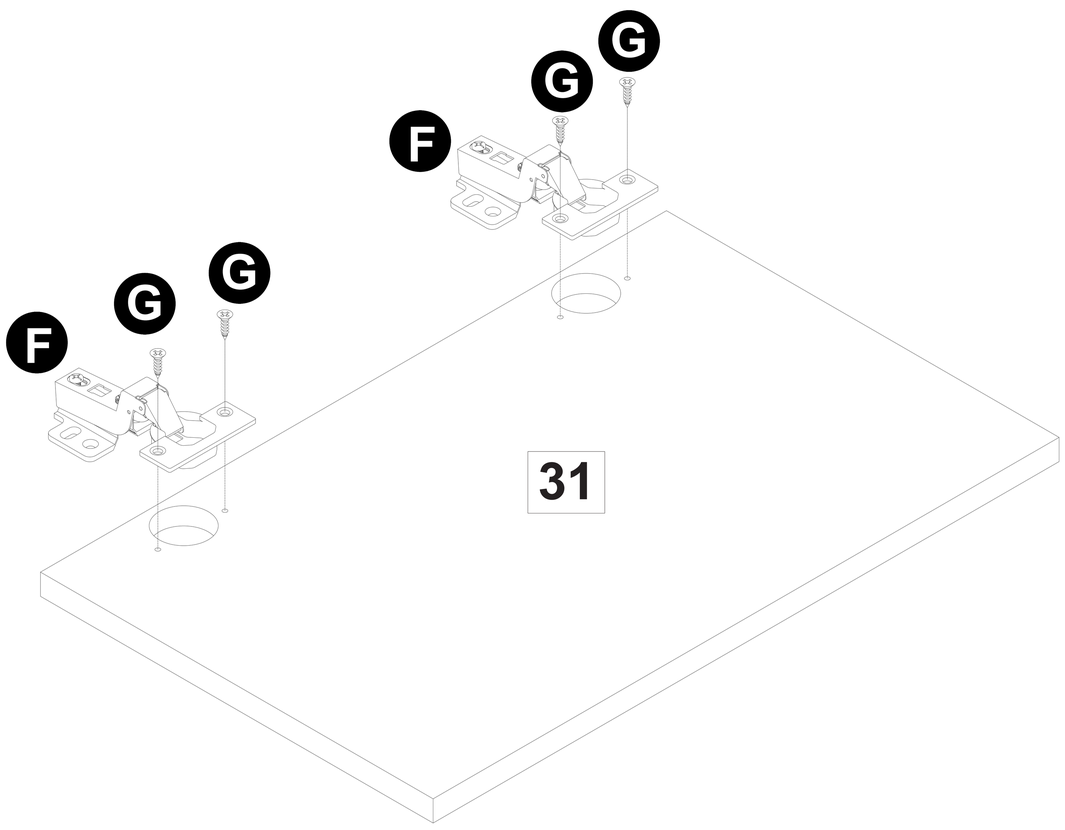

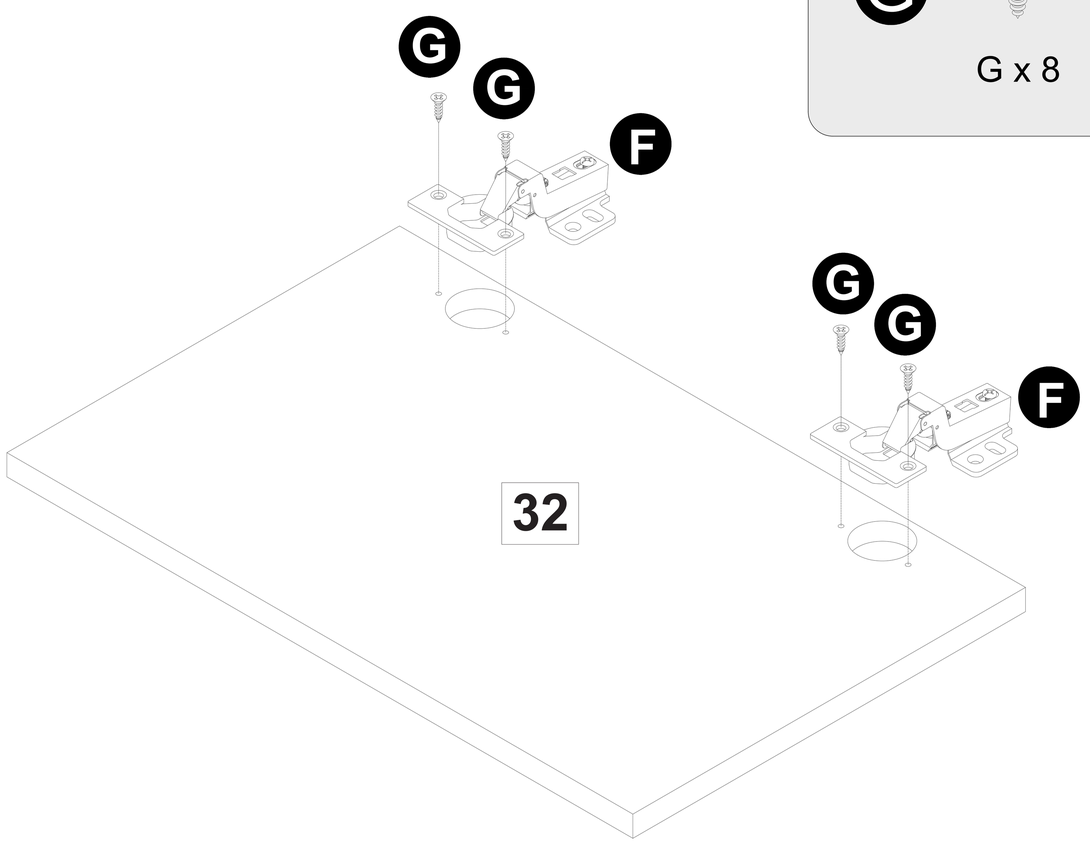

Step 20

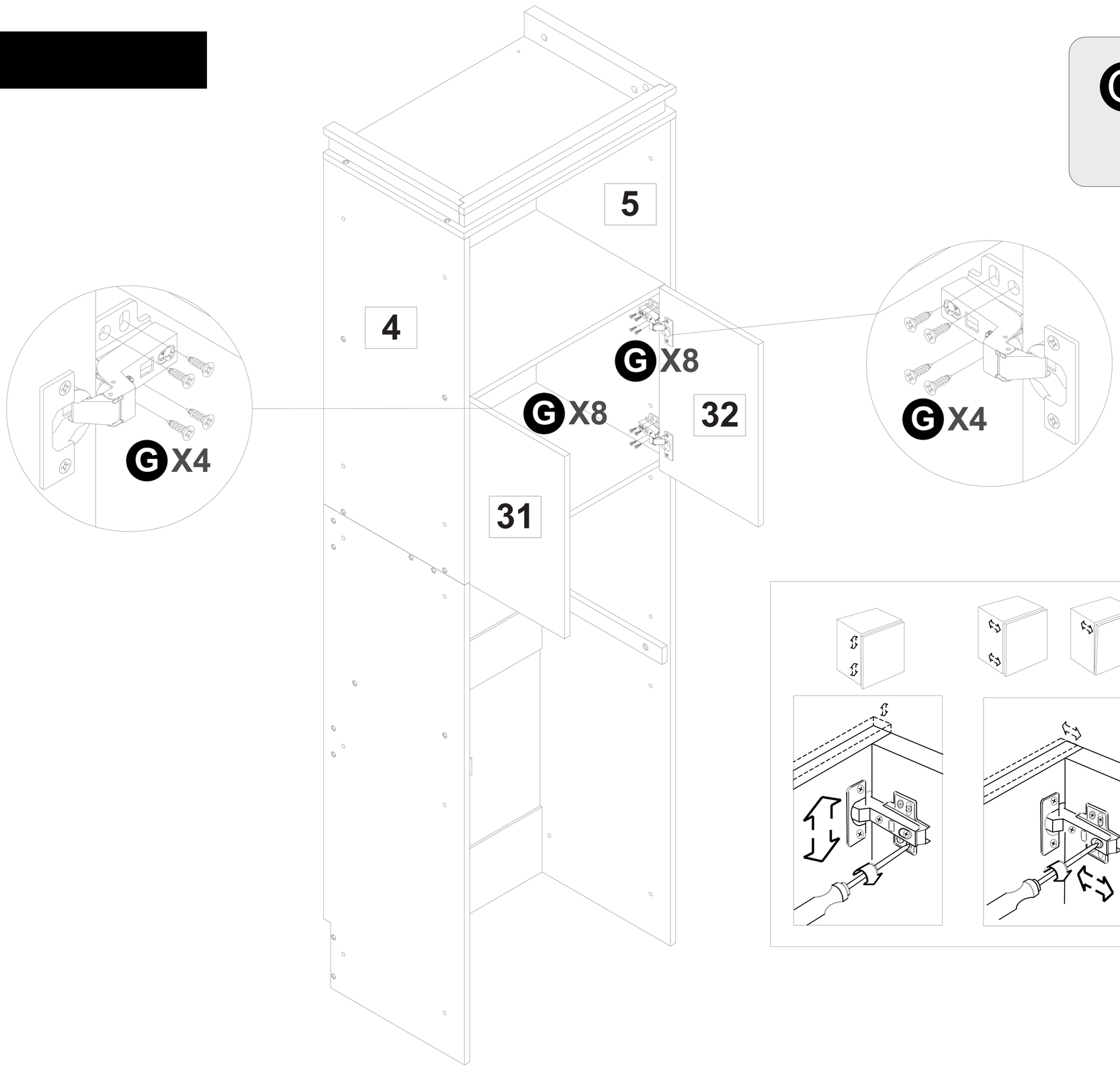

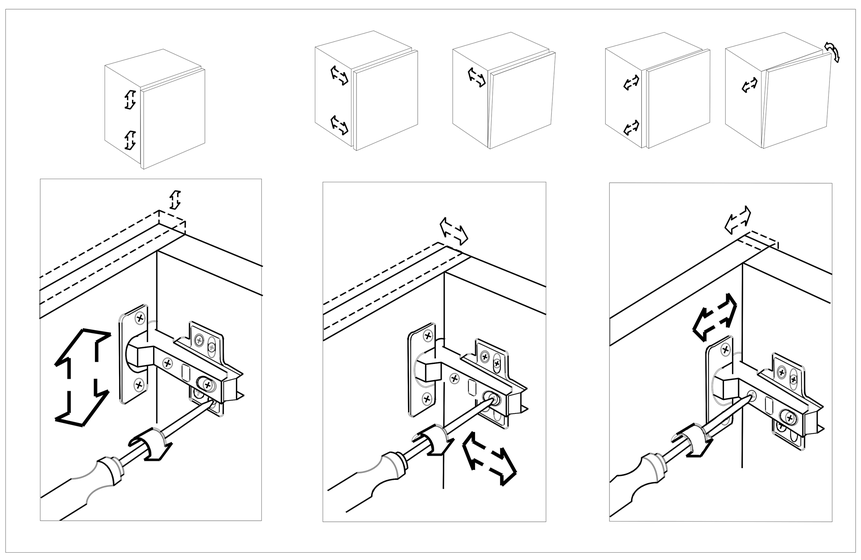

Assembly Instructions

Step 21

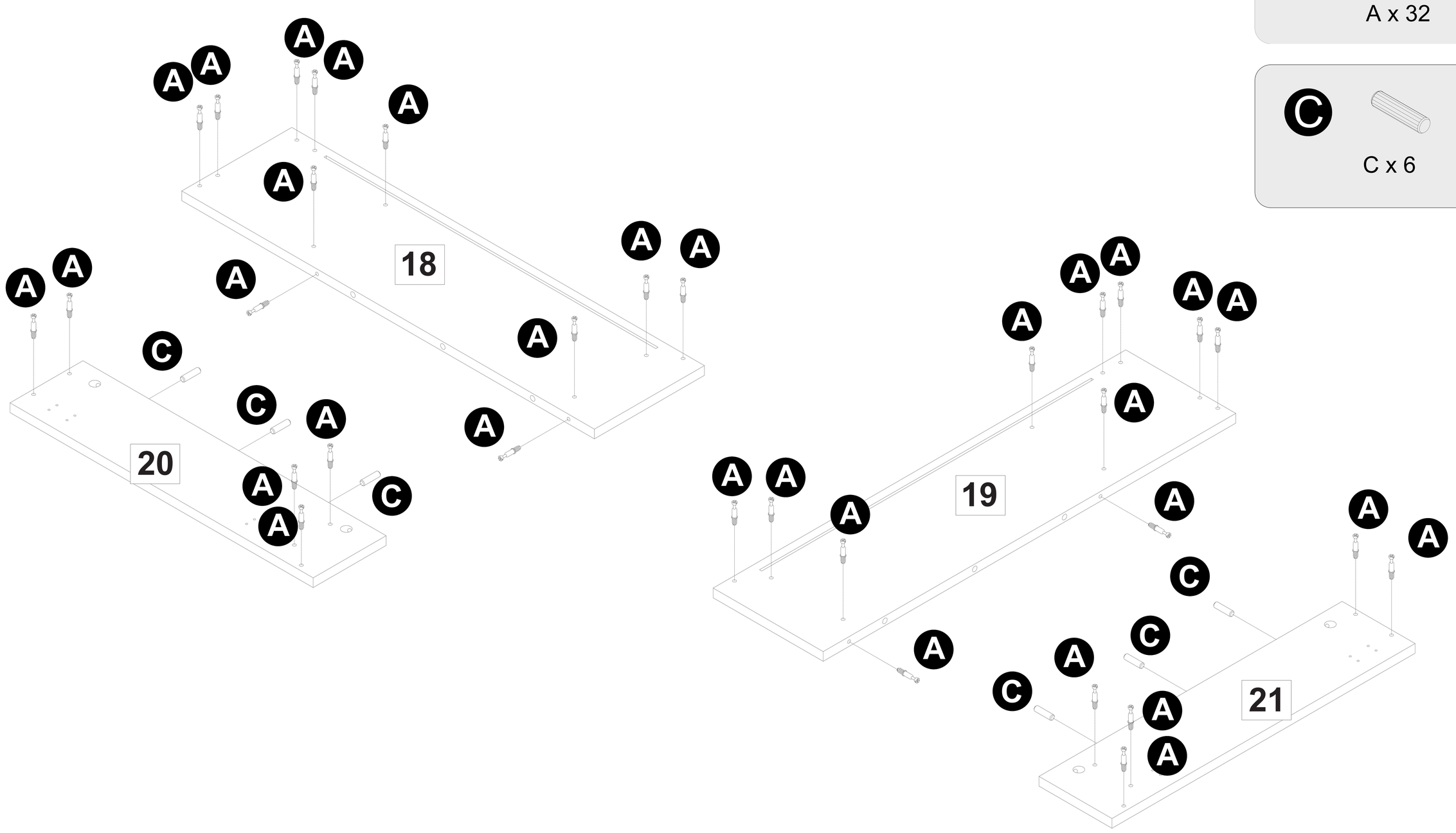

Step 22

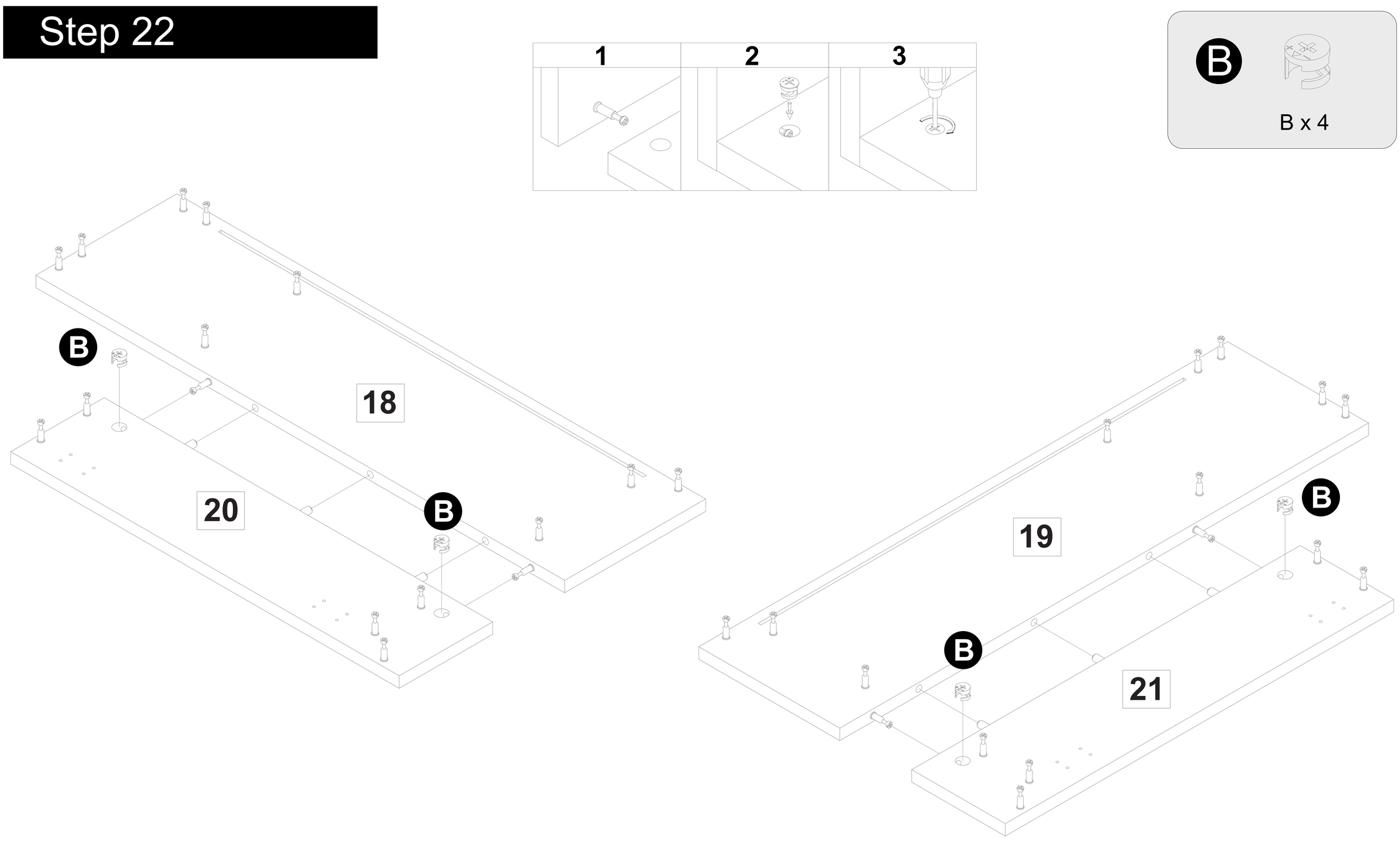

Step 23

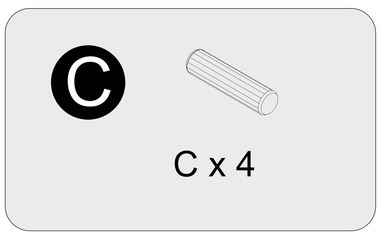

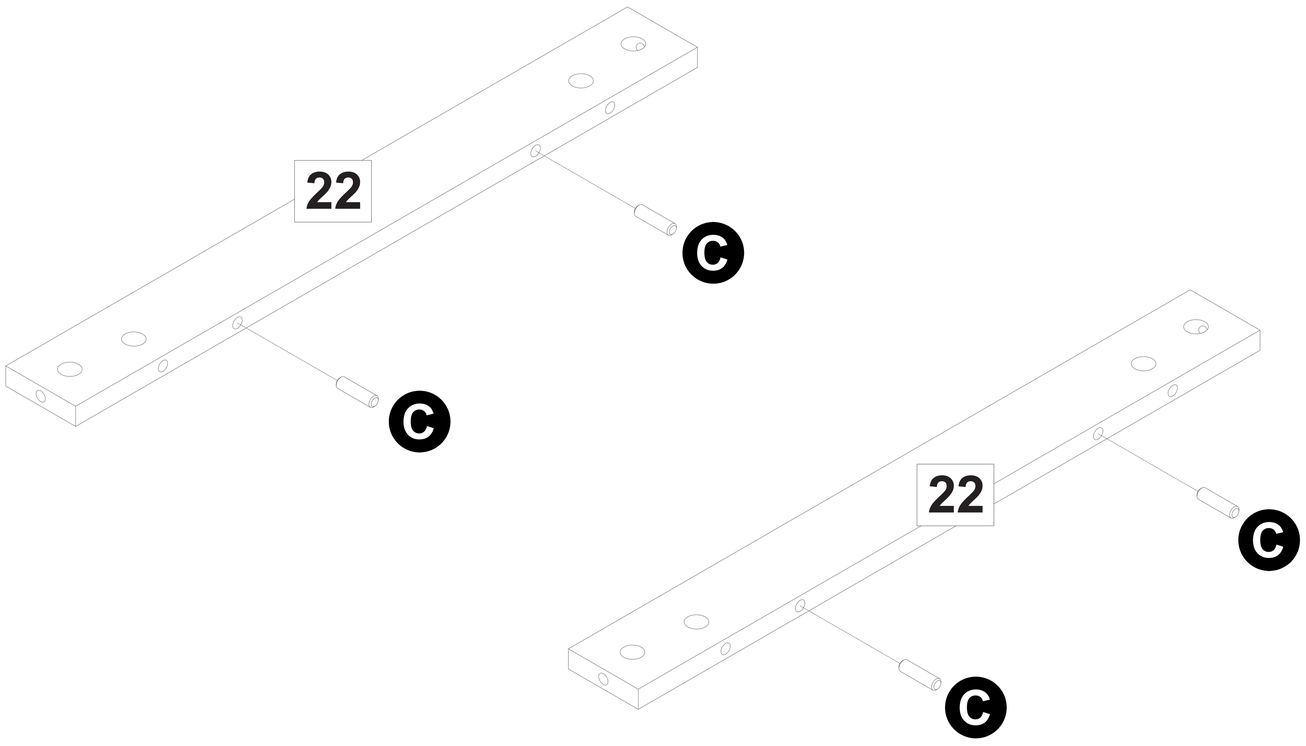

Step 24

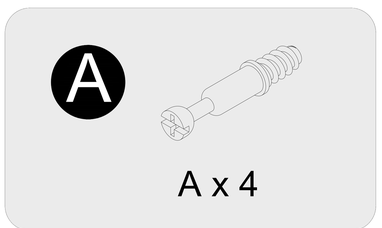

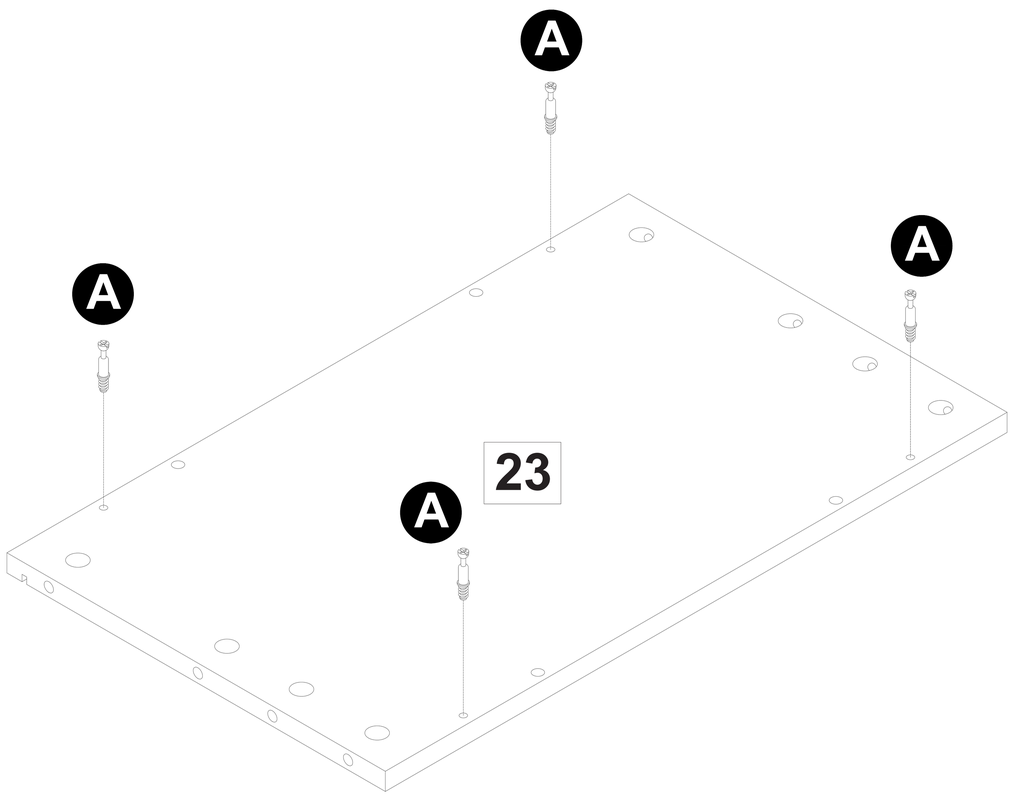

Step 25

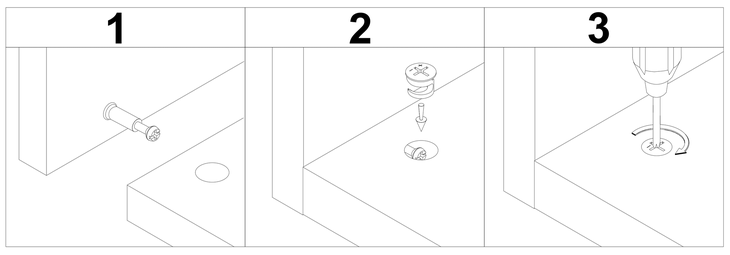

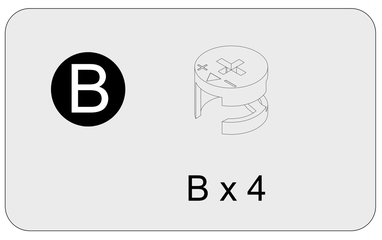

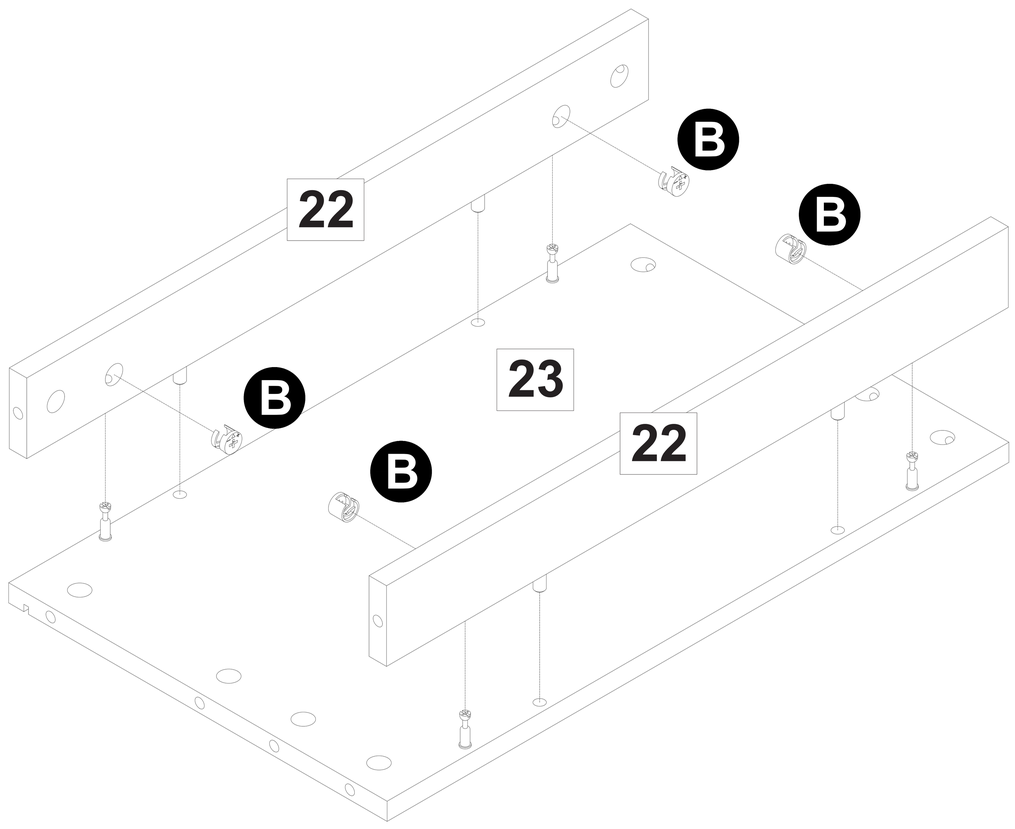

Step 26

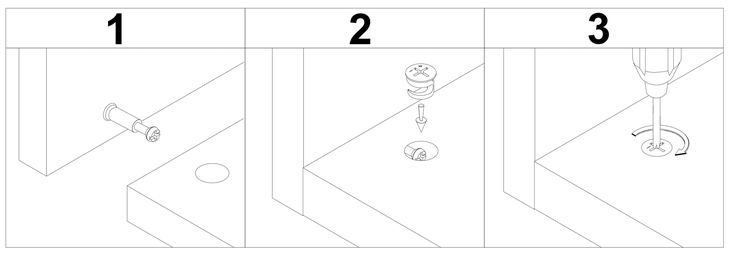

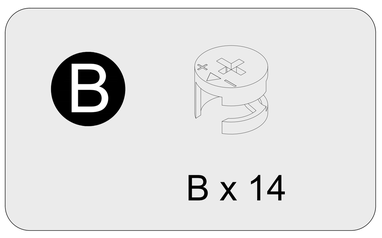

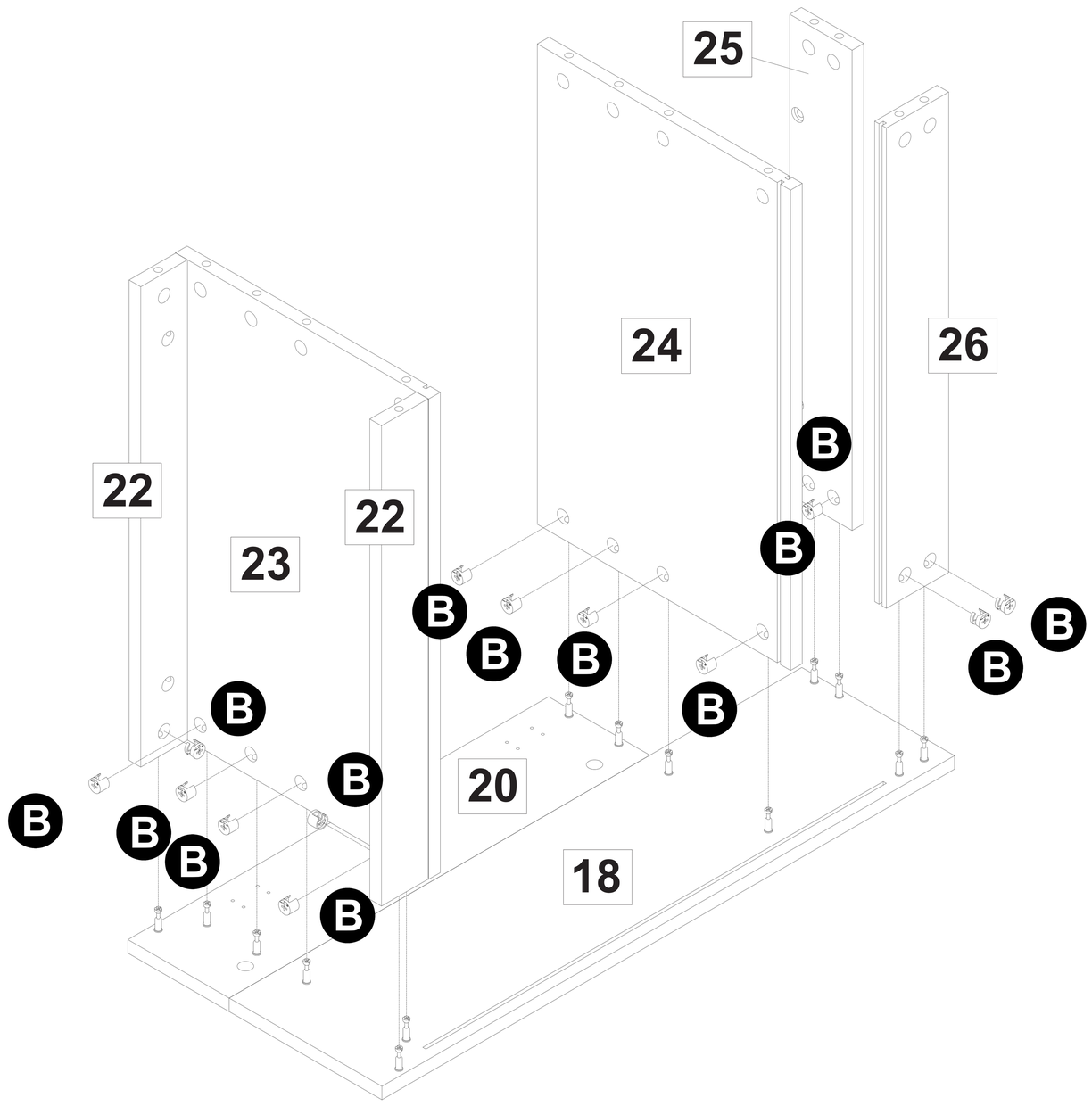

Step 27

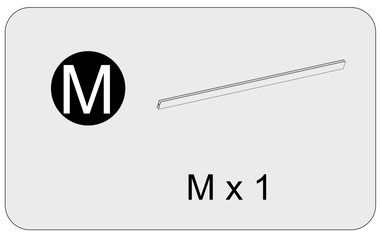

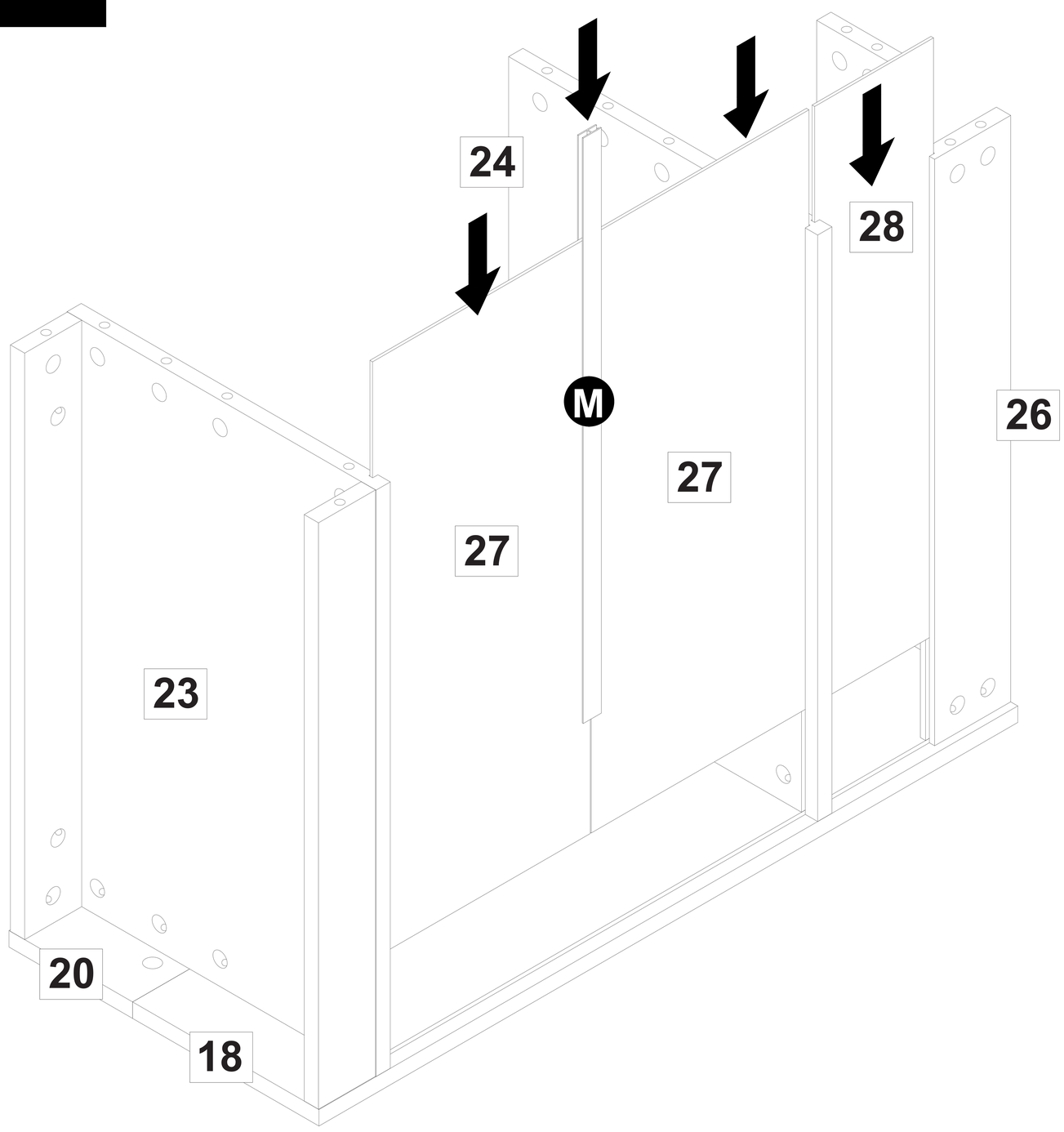

Step 28

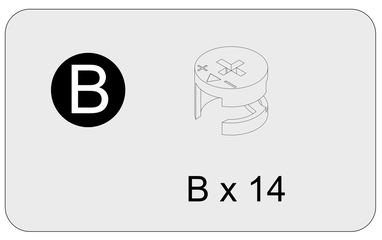

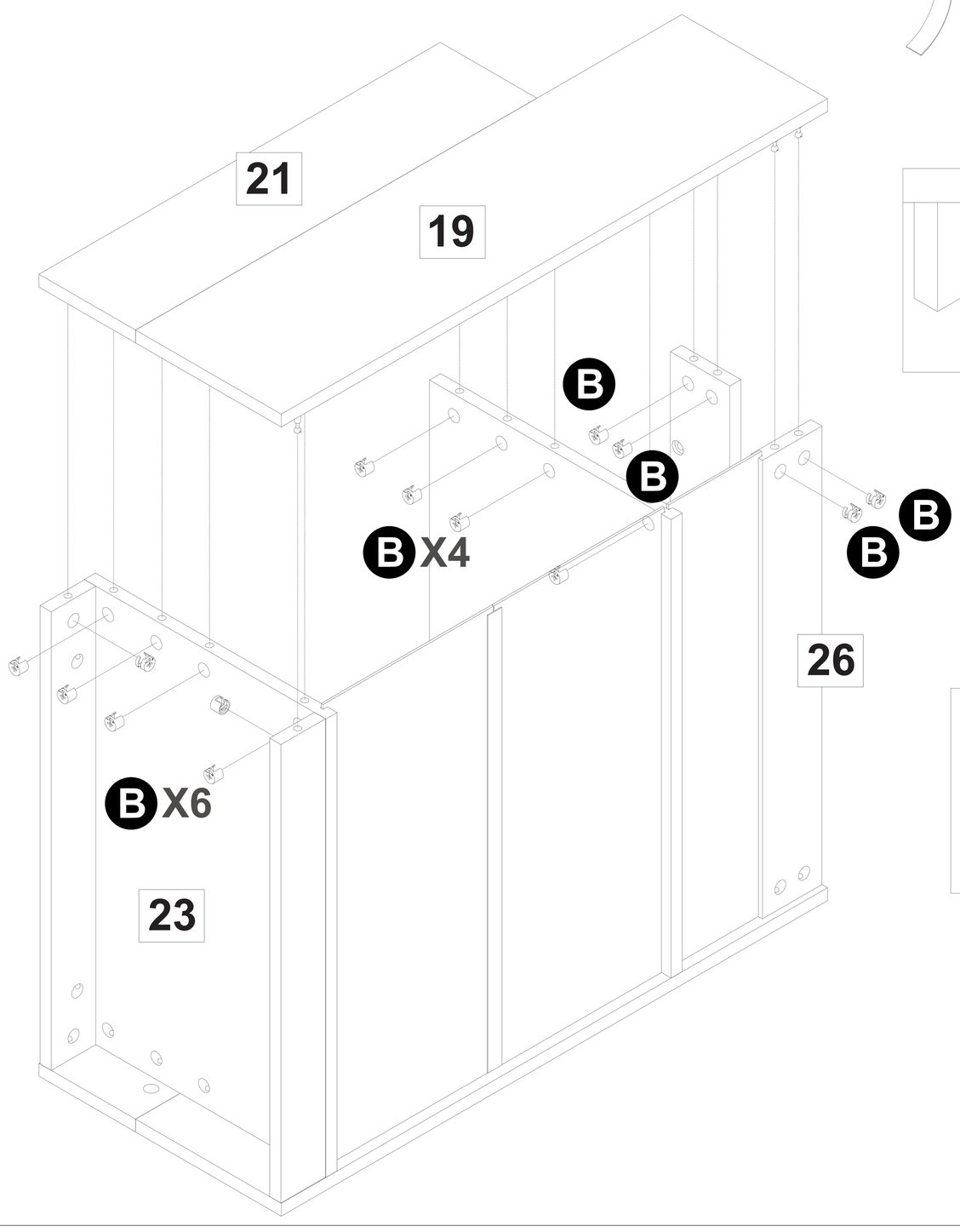

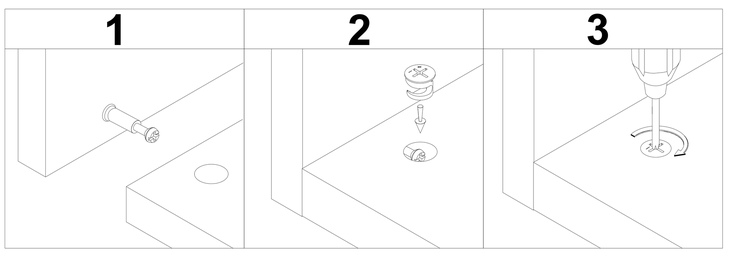

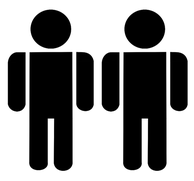

Two people are required to assemble and move this model.

Deux personnes sont nécessaires pour Assemblez et déplacez ce modèle.

Step 29

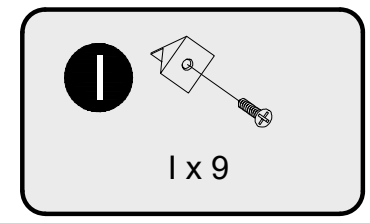

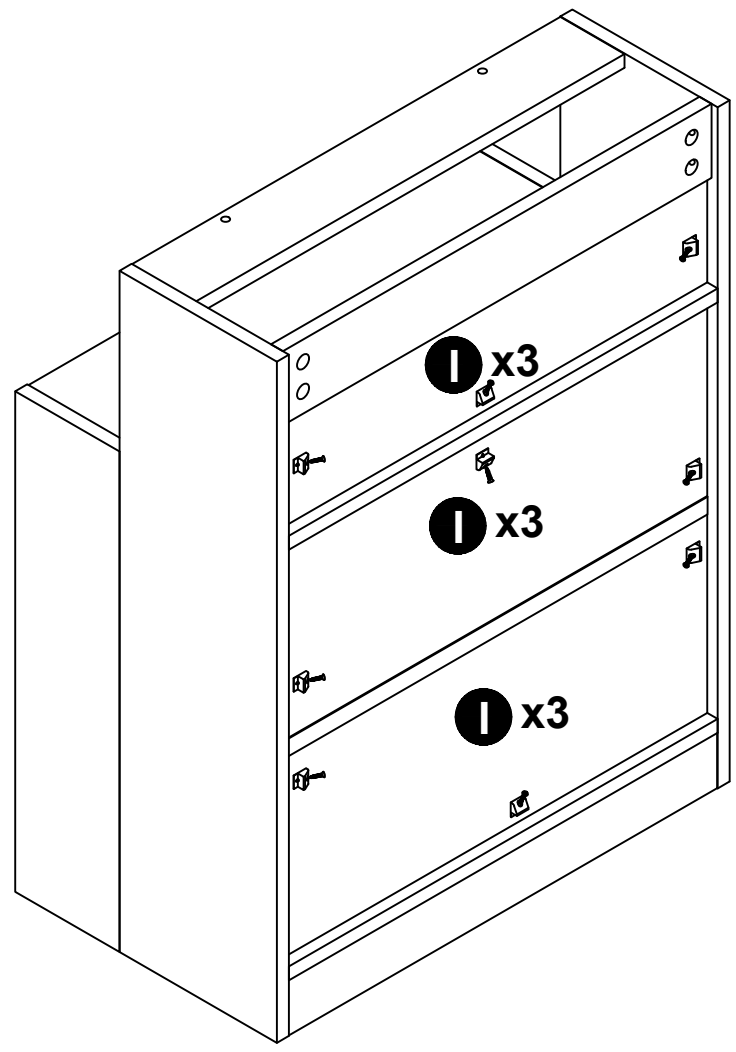

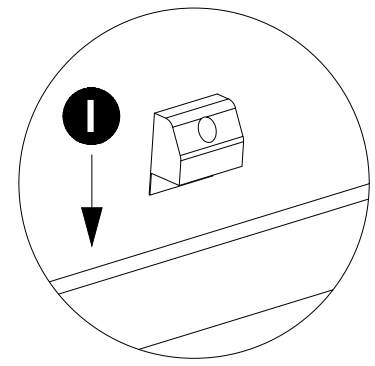

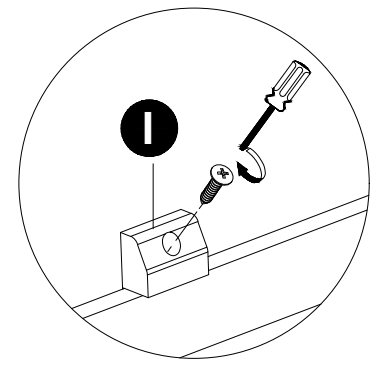

Step 30

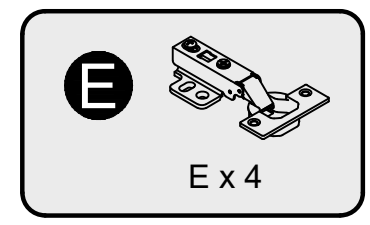

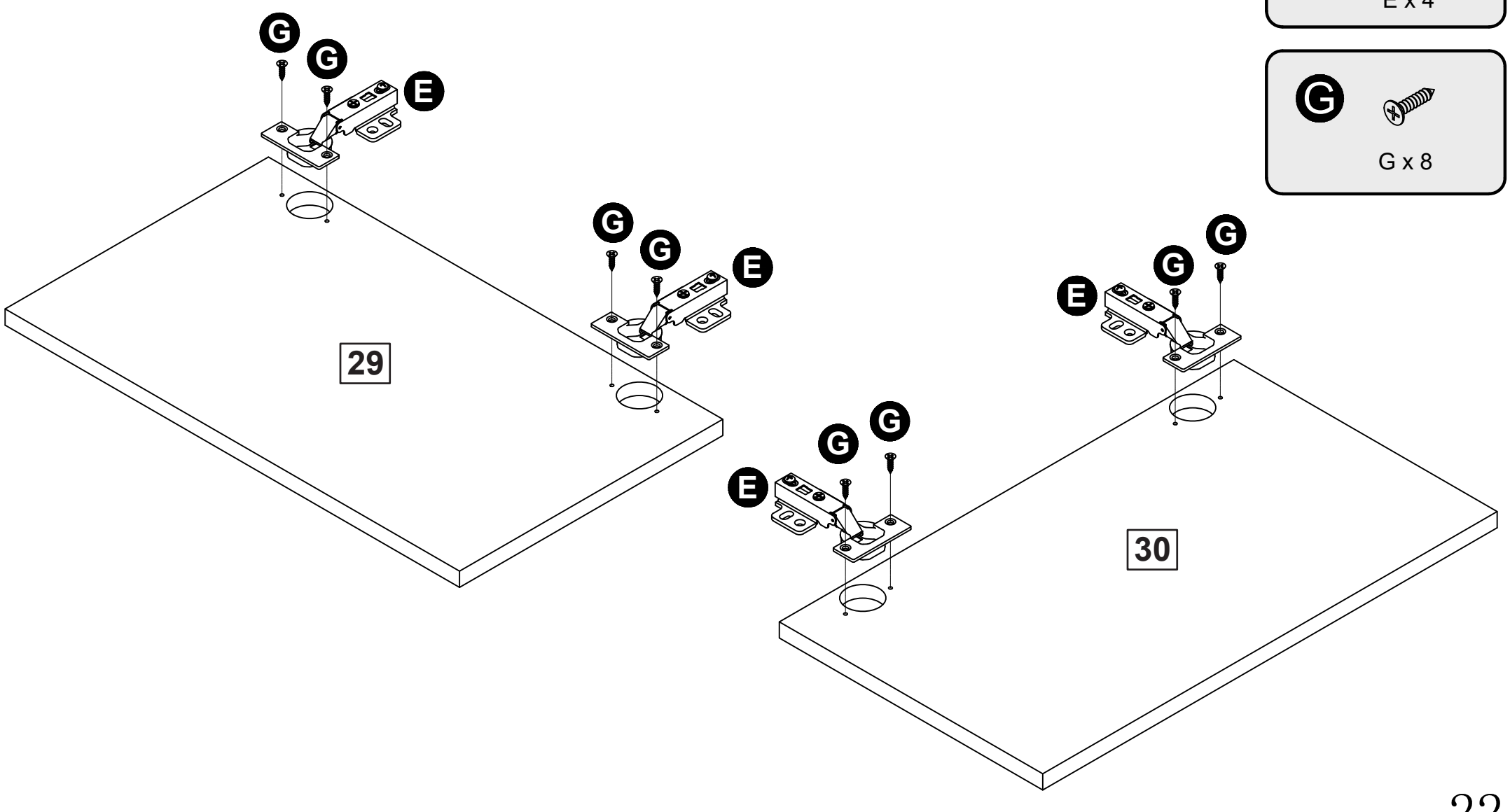

Step 31

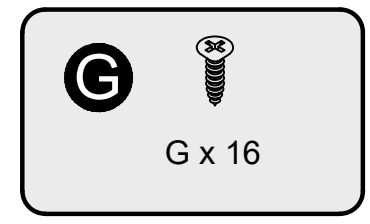

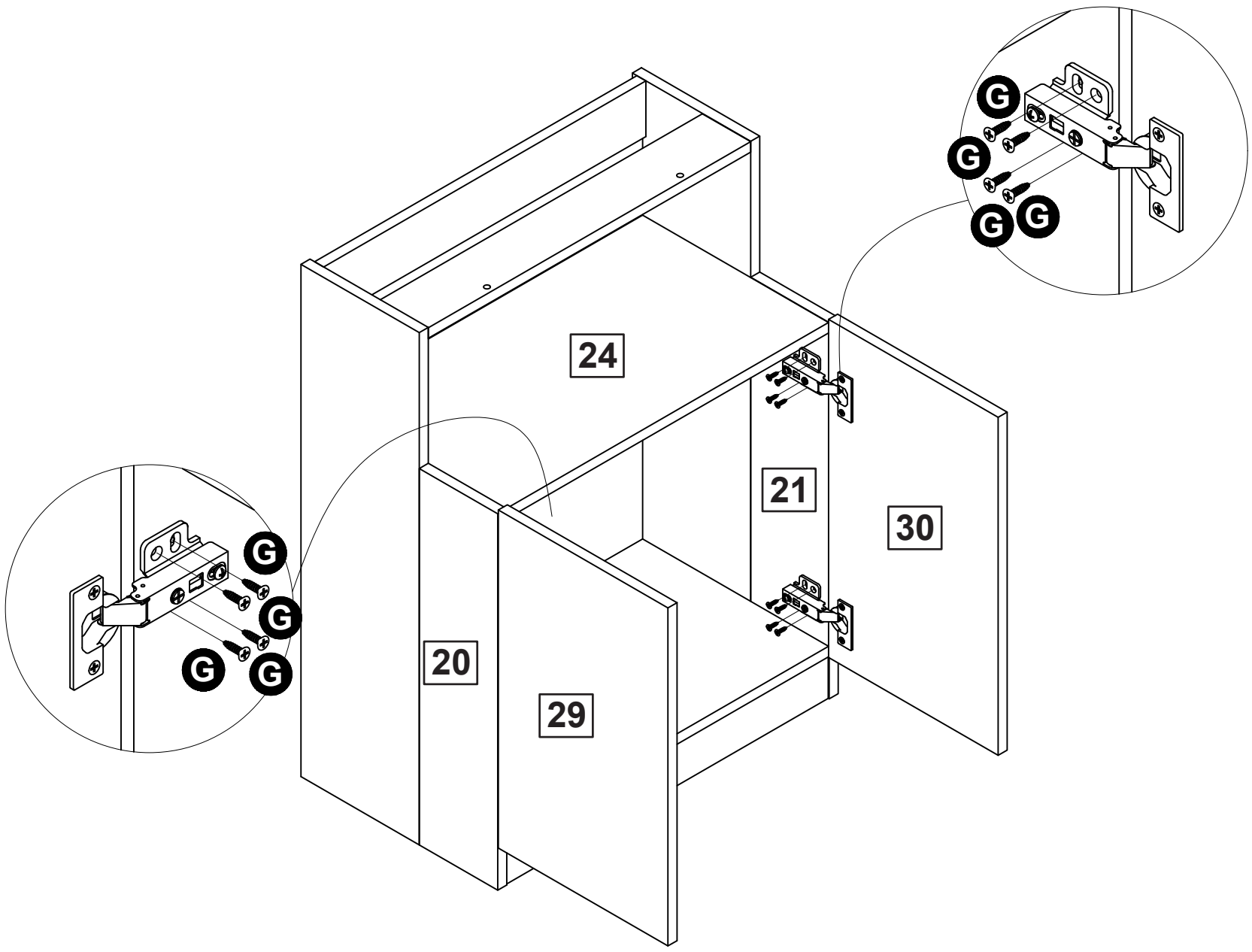

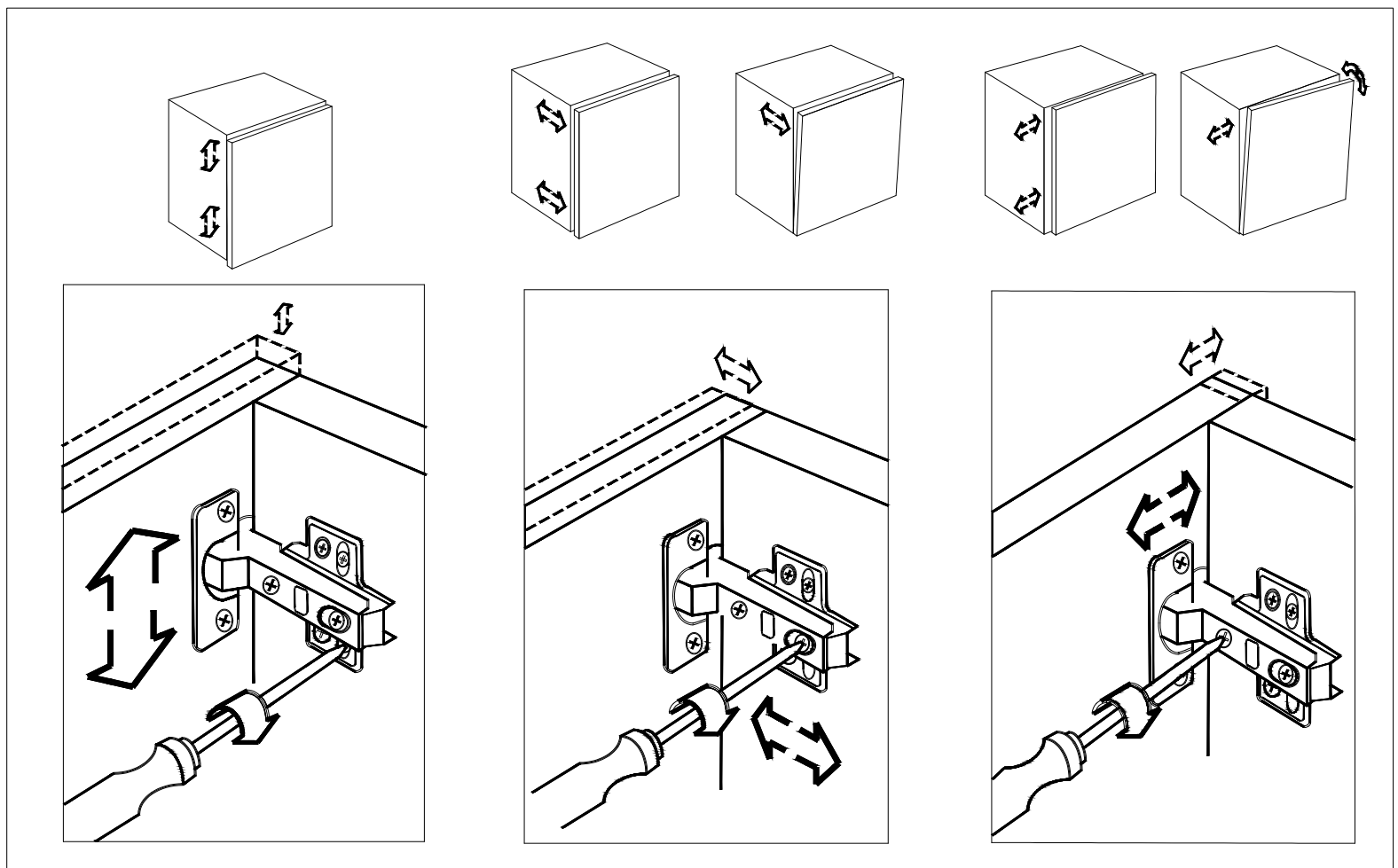

Step 32

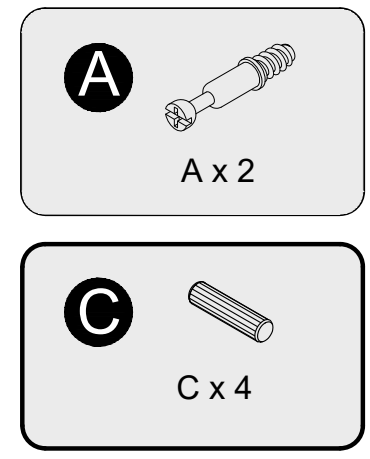

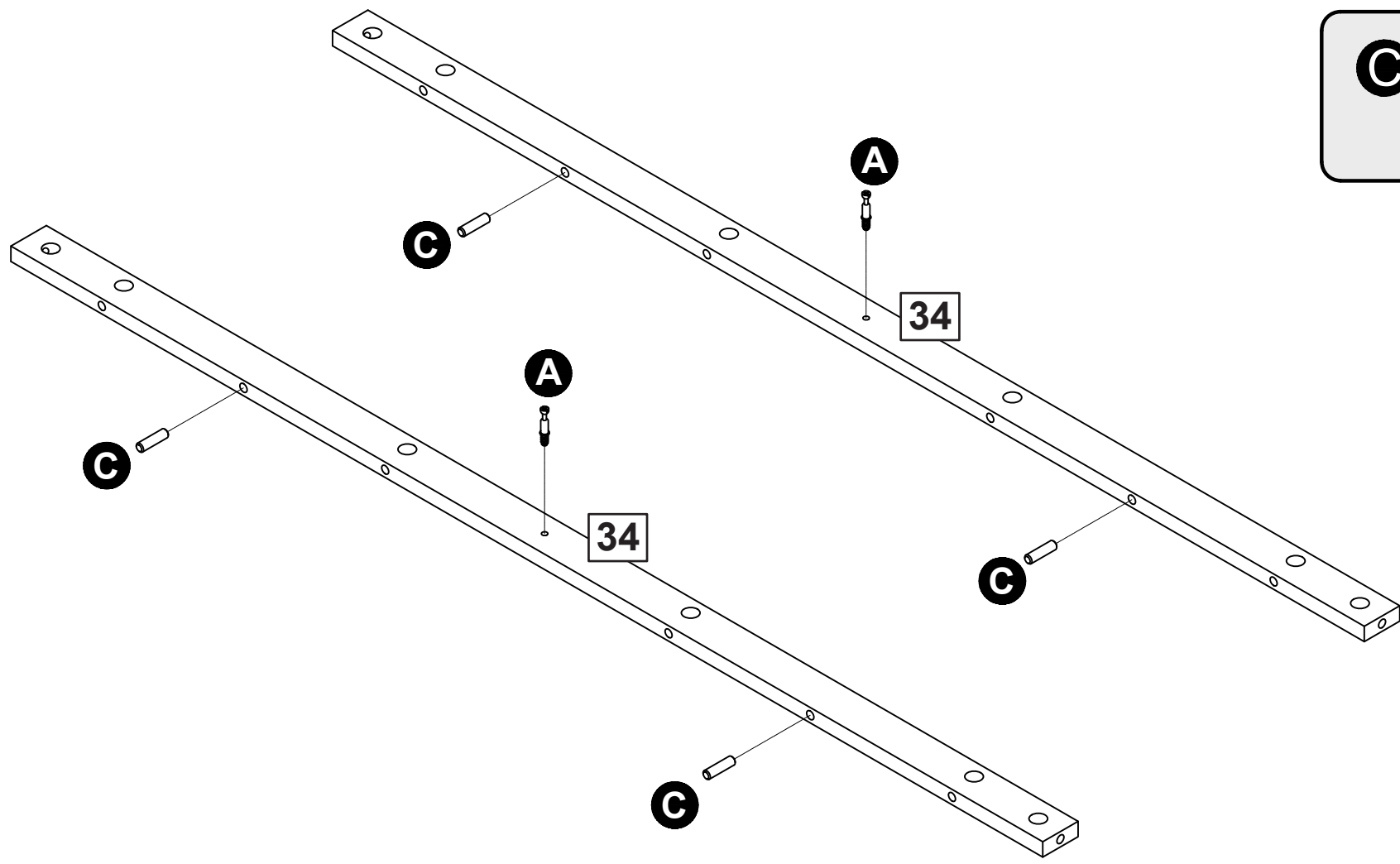

Step 33

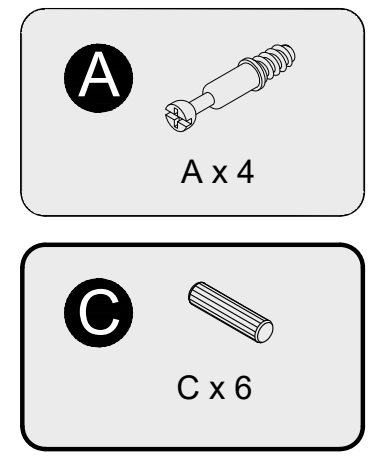

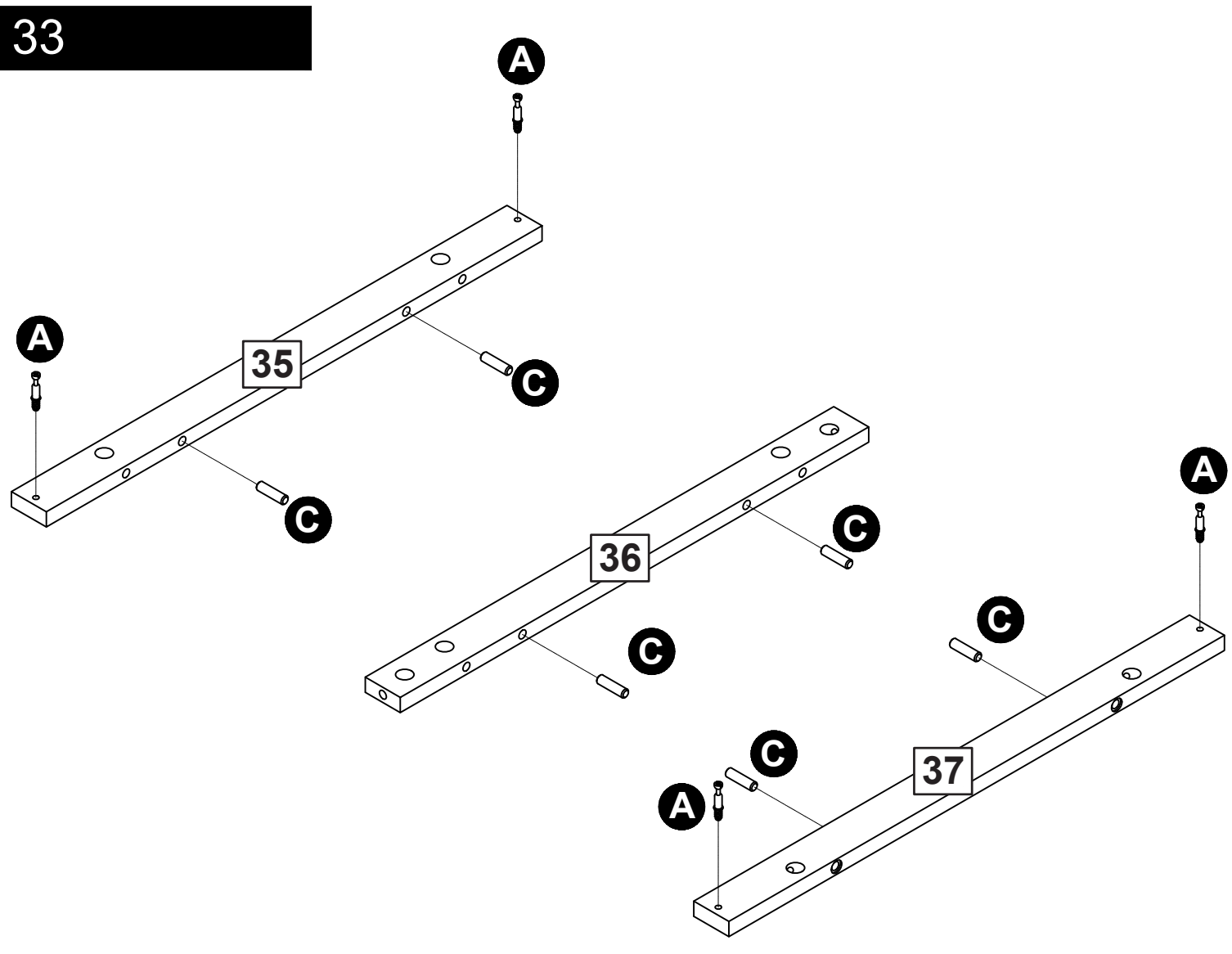

Step 34

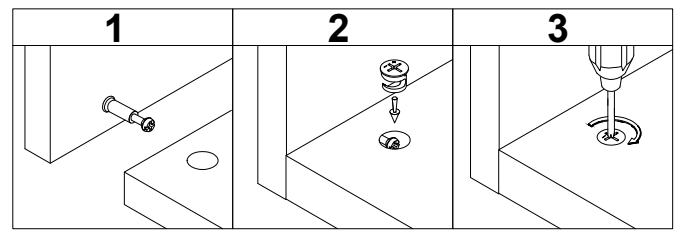

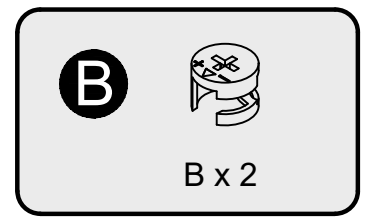

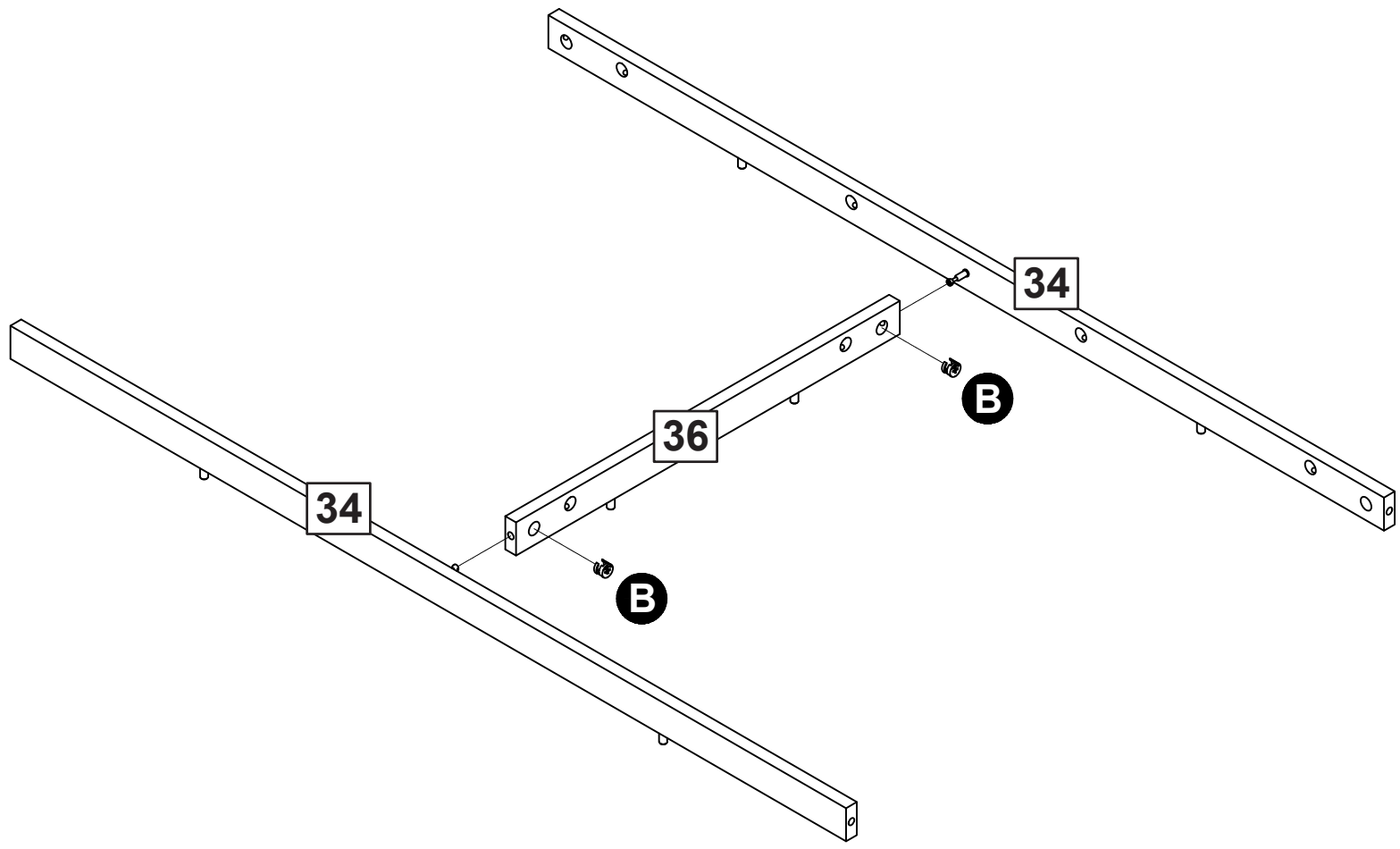

Step 35

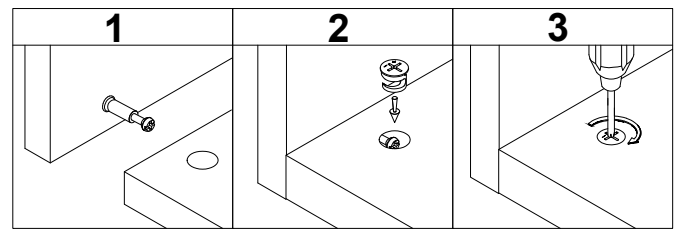

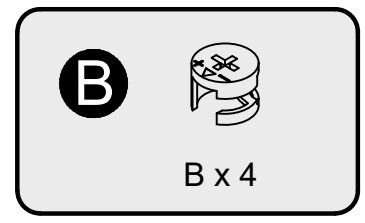

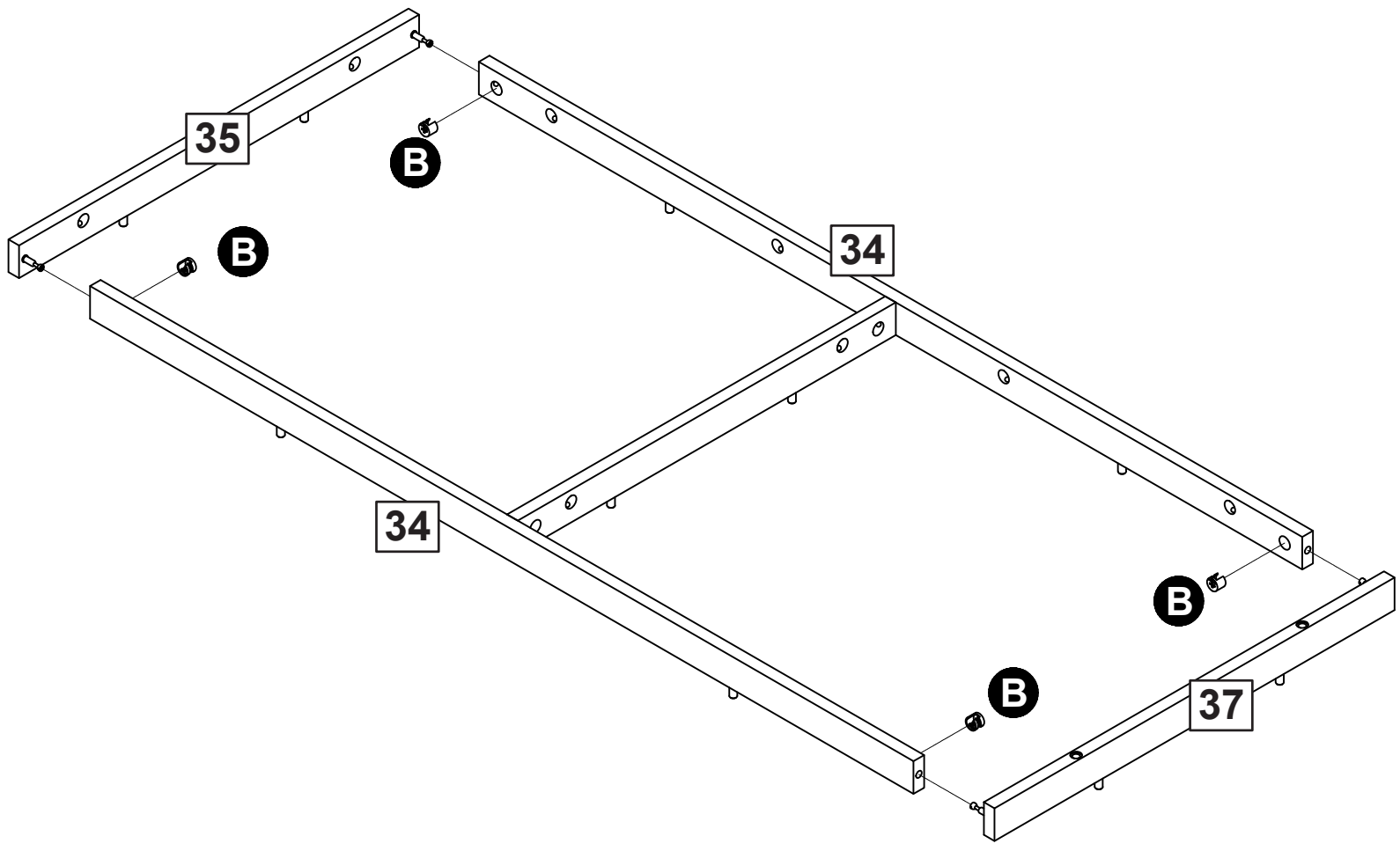

Step 36

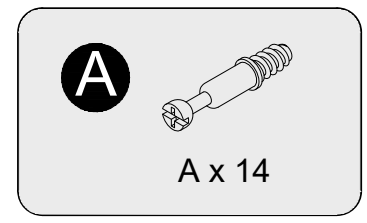

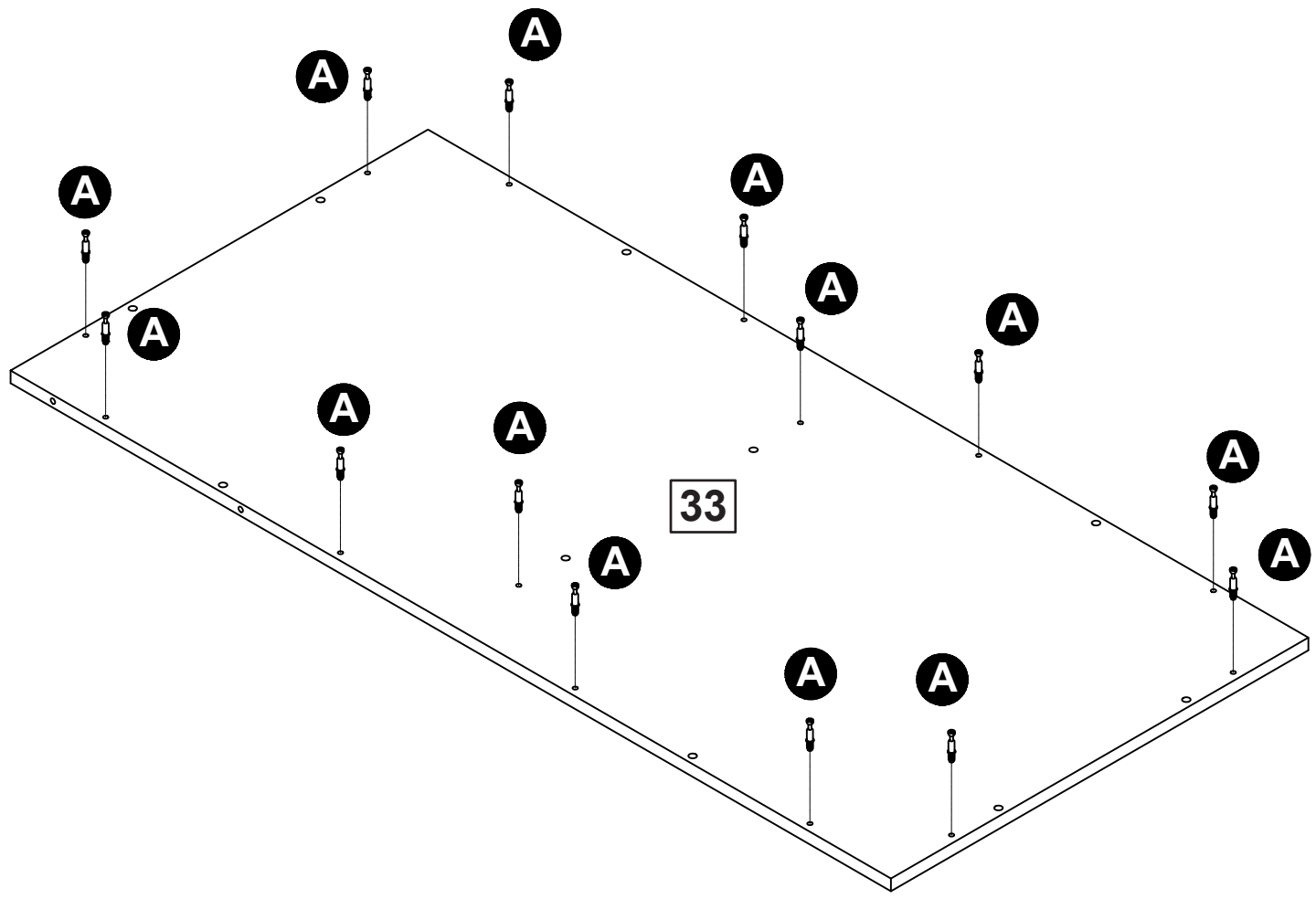

Step 37

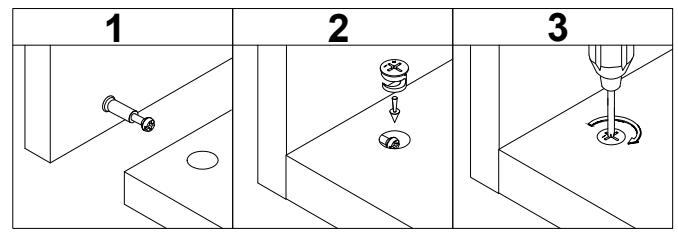

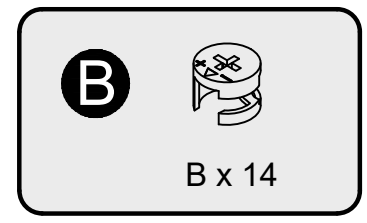

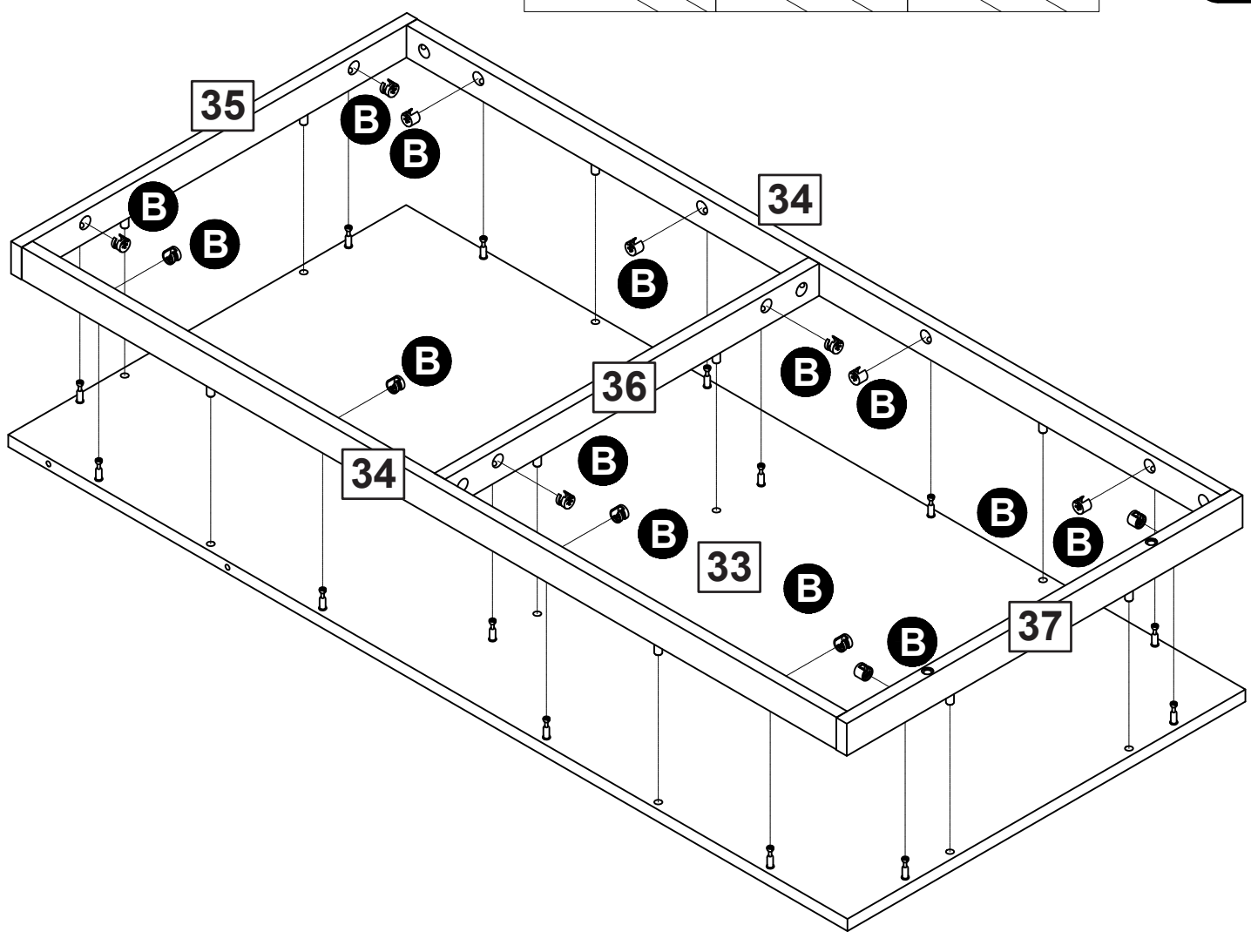

Step 38

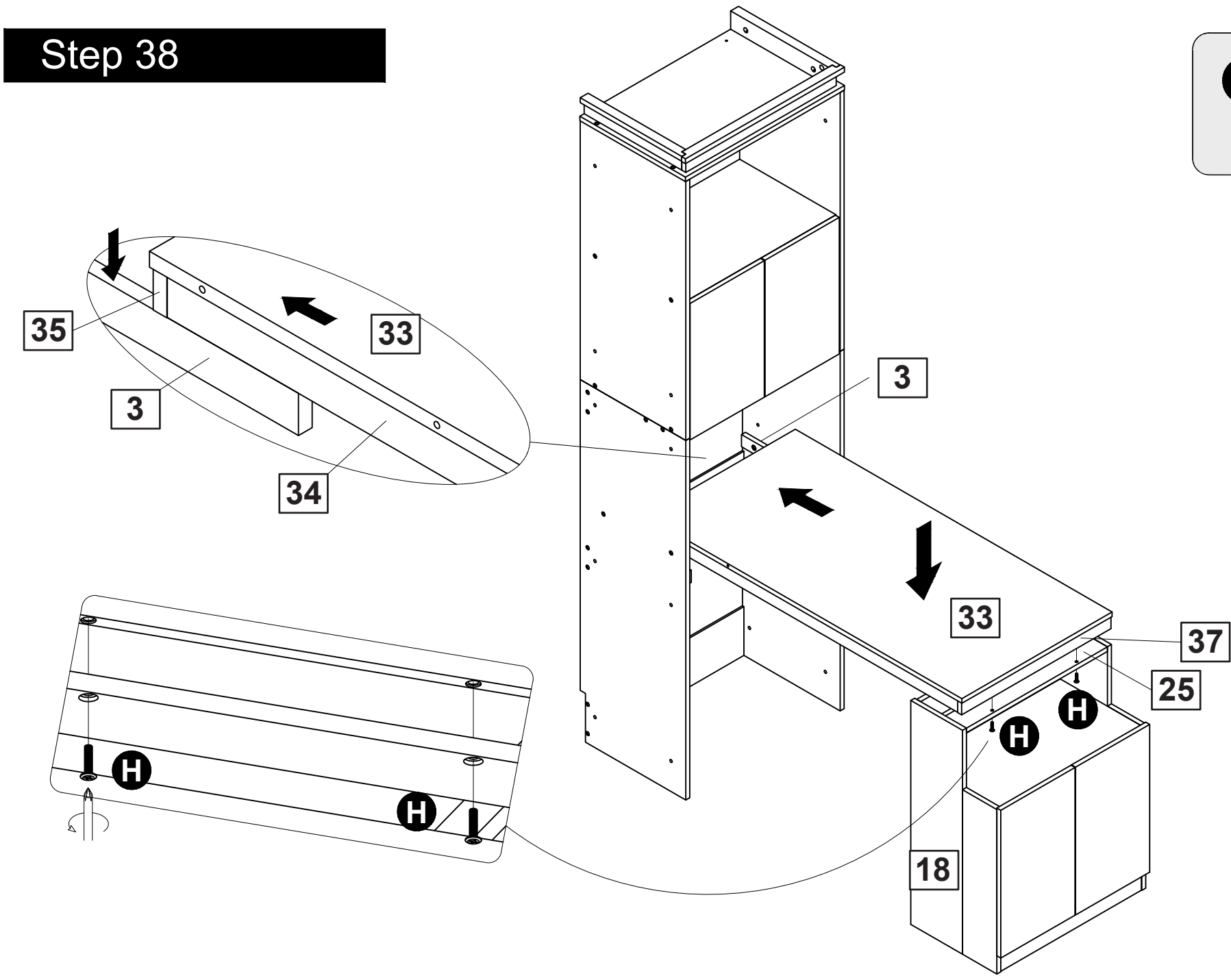

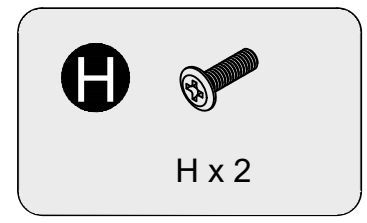

Step 39

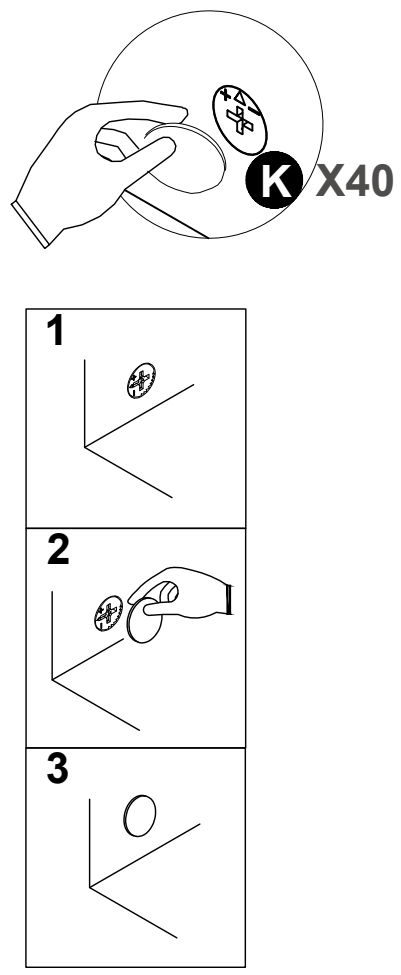

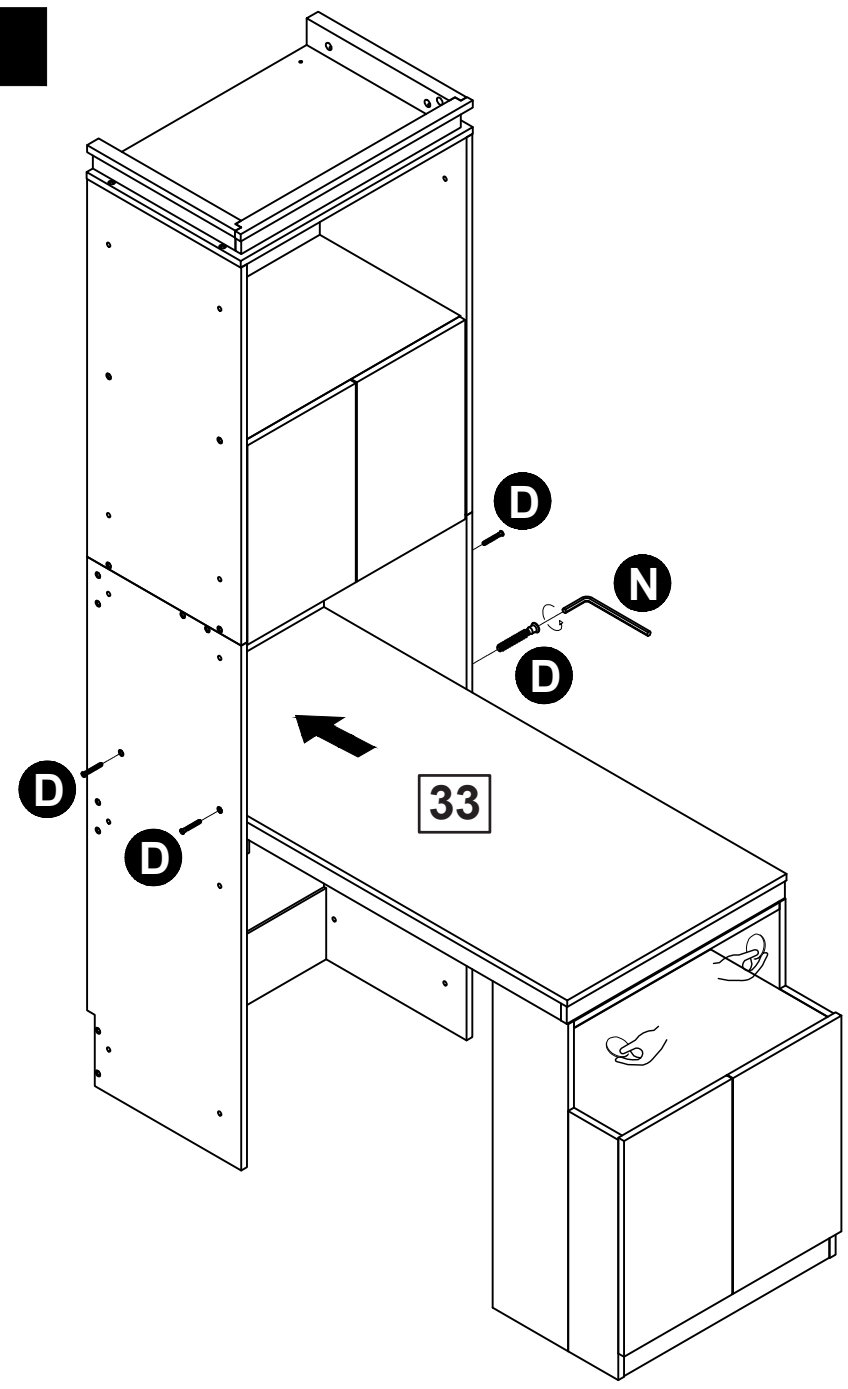

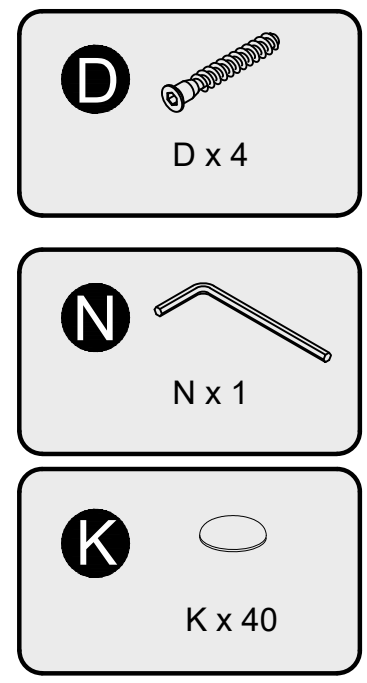

Step 40

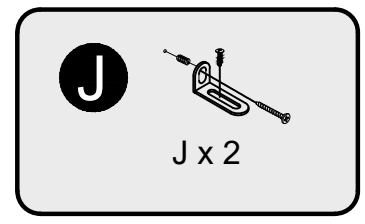

ATTENTION:
For safety and stability, we suggest you have to secure the anti tip accessories to the wall to prevent tipping, injury, and property damage.

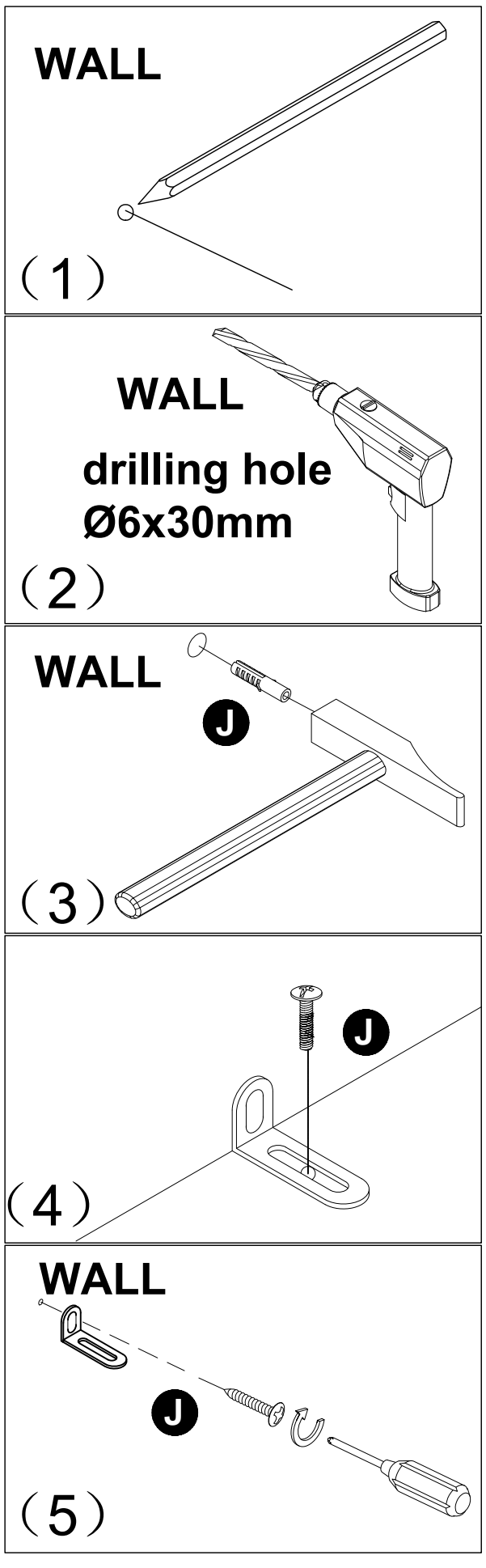

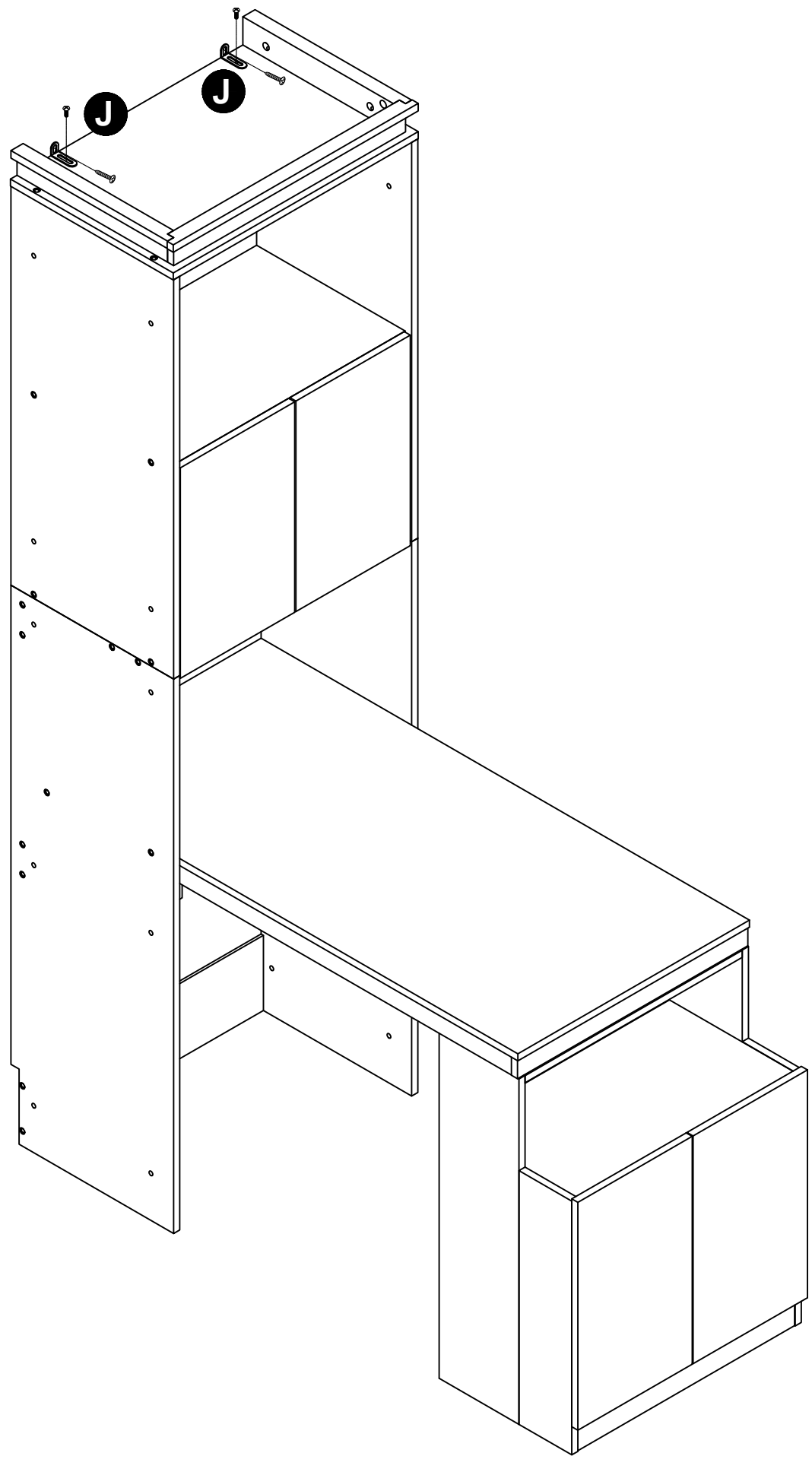

Step 41

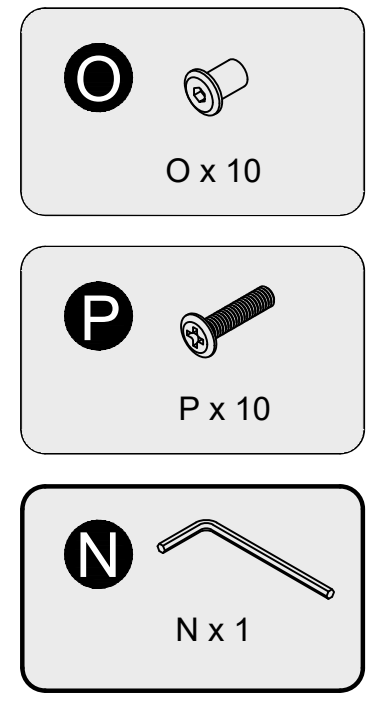

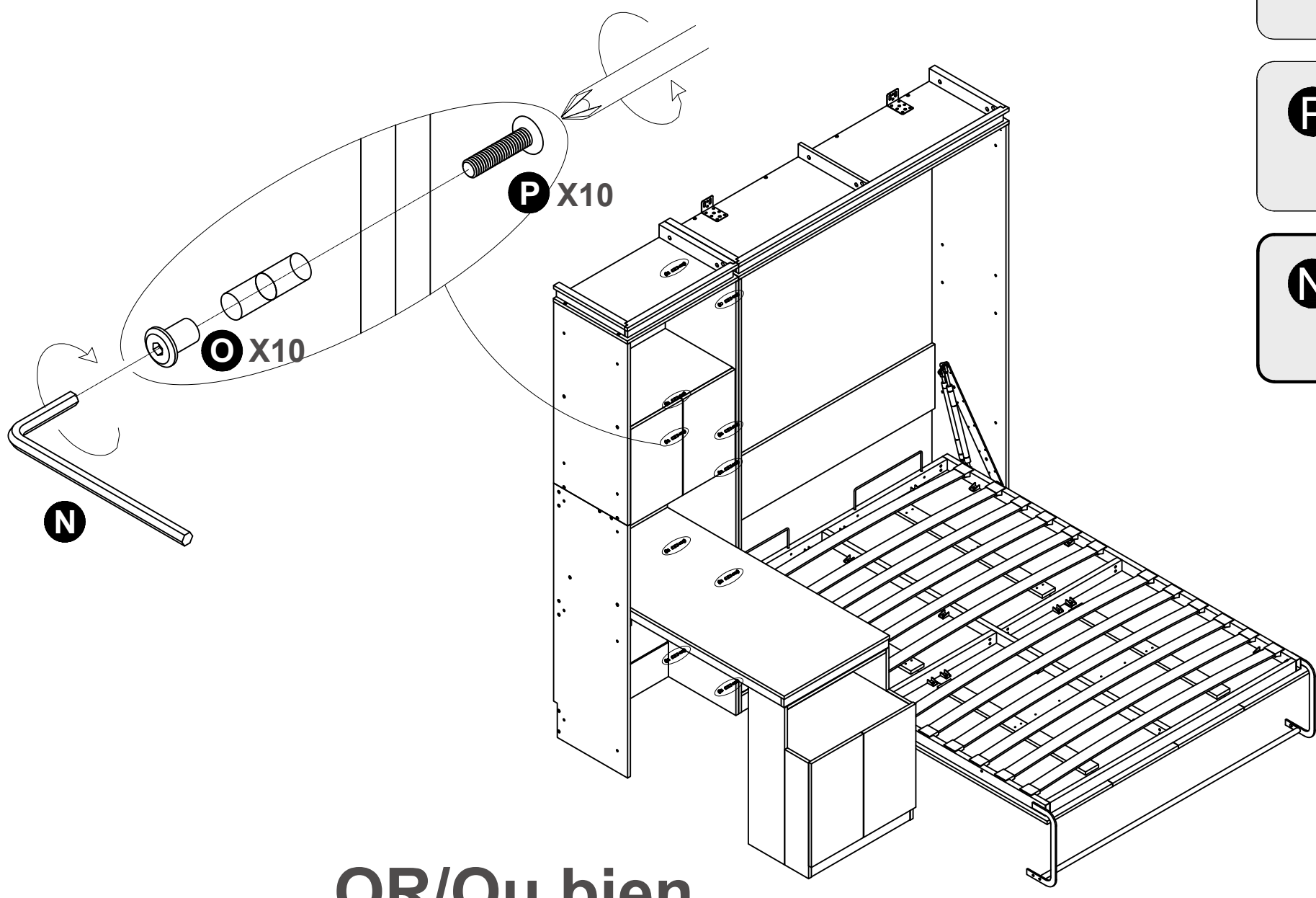

OR/Ou bien

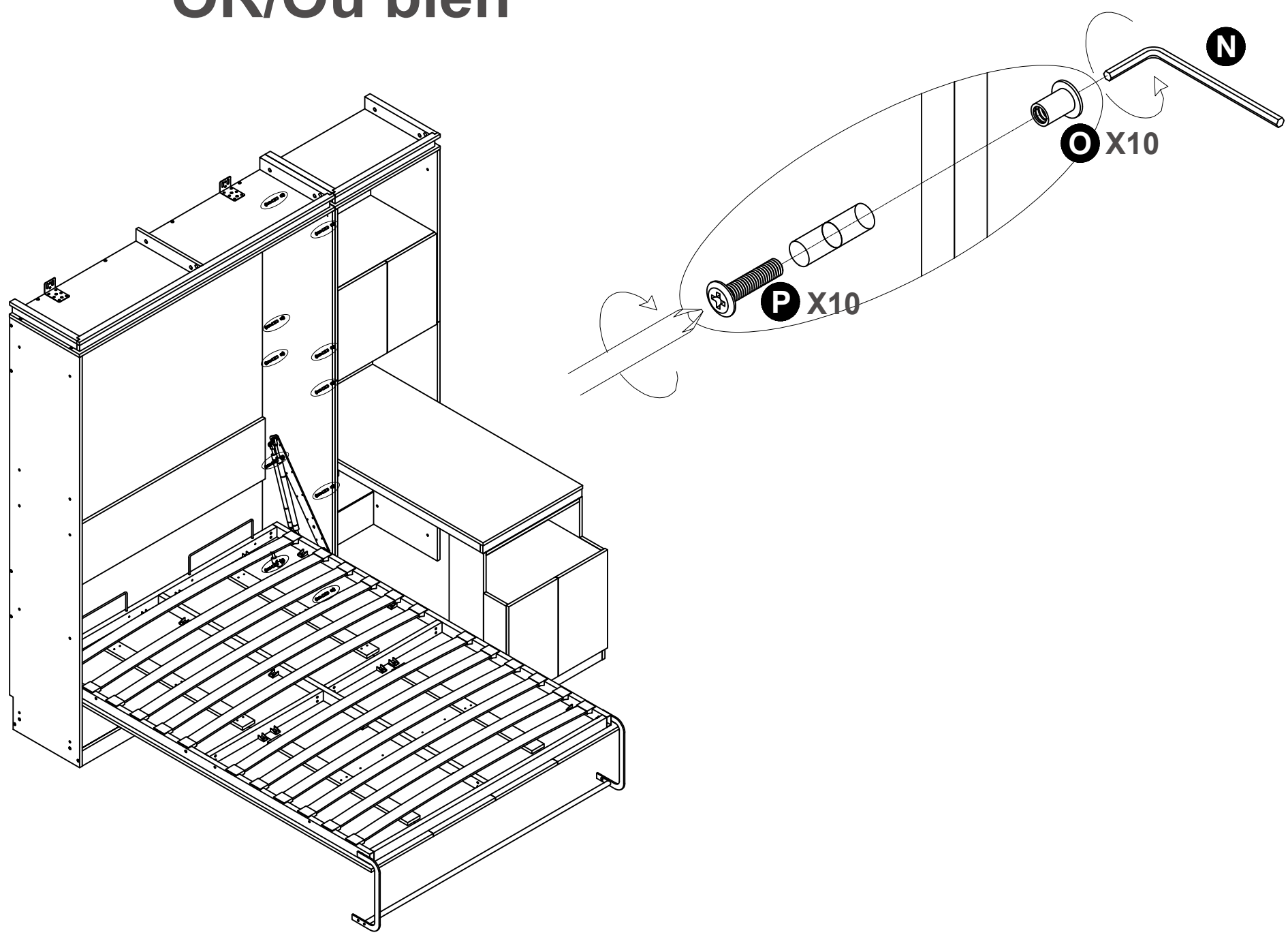

Step 42

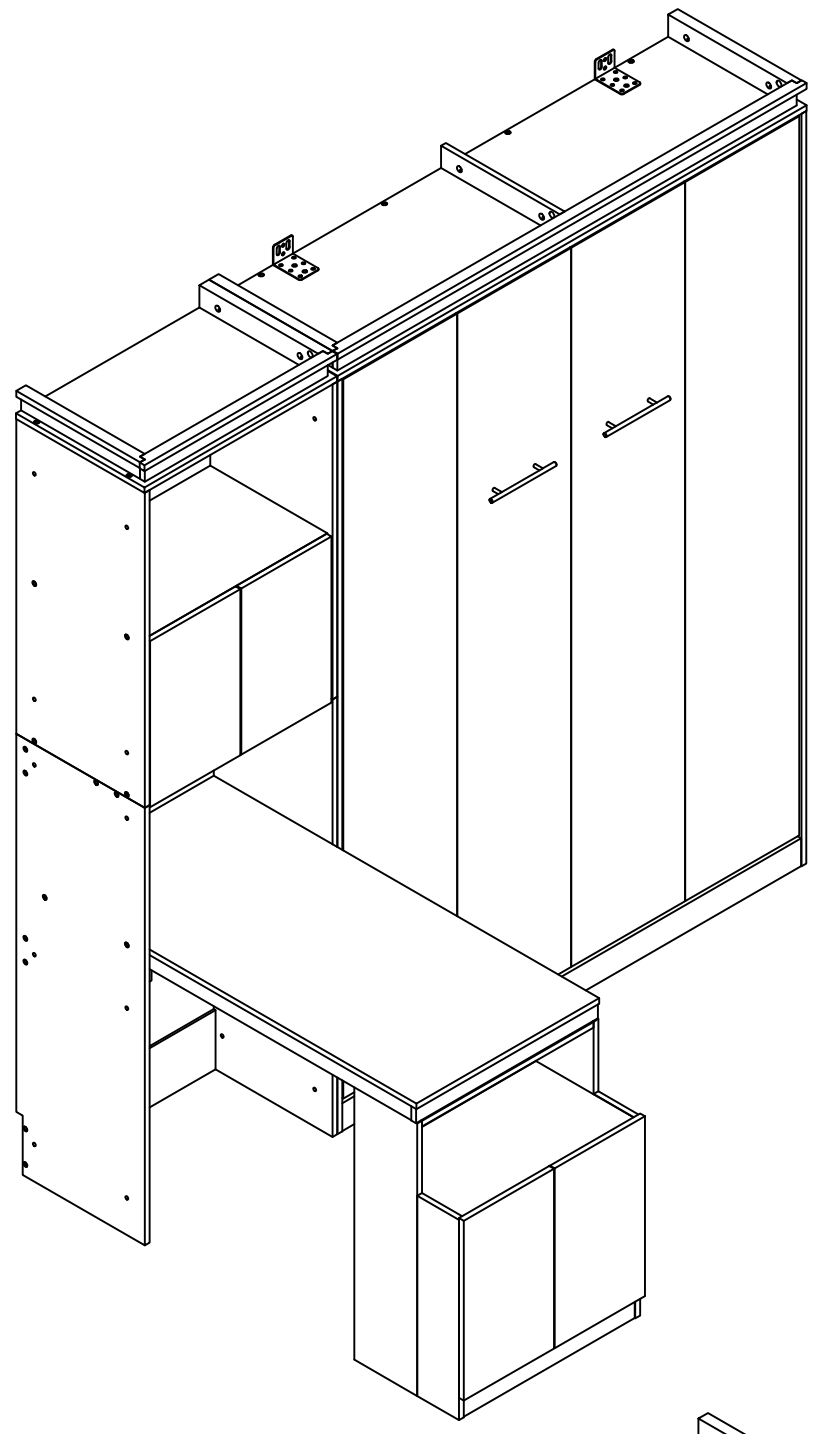
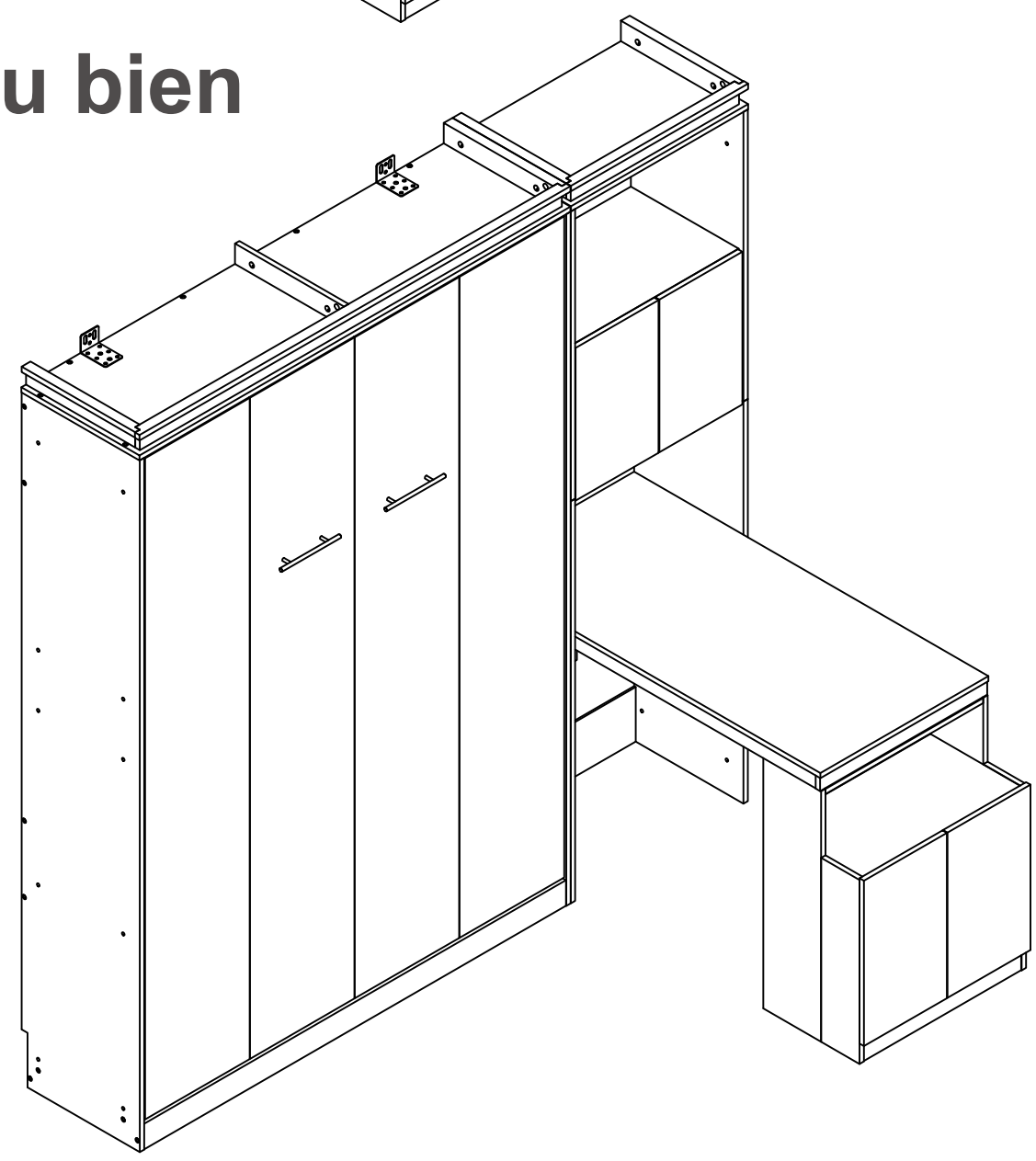
OR/Ou bien