Installation Steps：

①

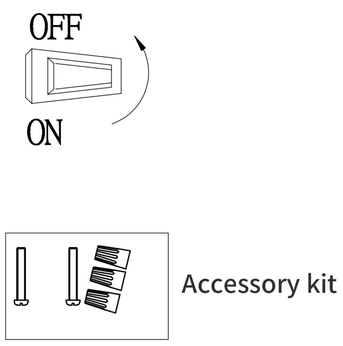

1. Turn off the power.

②

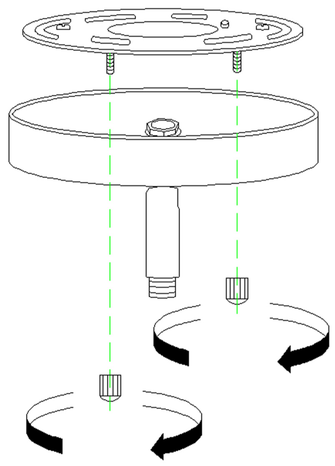

2. Straighten the universal angle and unscrew the two discs(E) to fit the fitting.

③

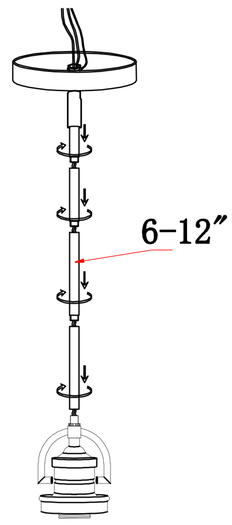

3. The power cable needs to pass through six straight pipes (F) and discs (E), tightening the straight pipes (F) from bottom to top, using the top straight pipe without knuckle teeth (L), and finally tightening the discs (E).

④

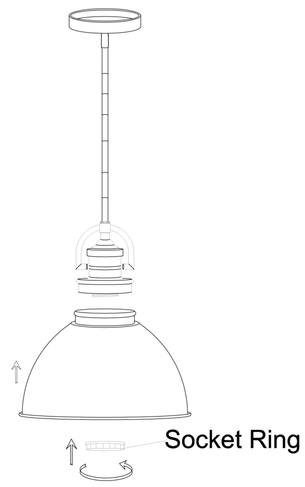

4. The shade is placed over the lamp cup(H), and then the shade is locked with the lamp holder ring.

⑤

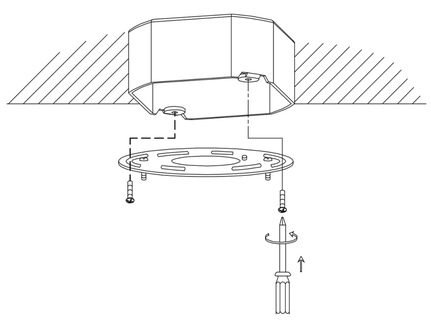

5. Attach the hanging plate to the junction box(A) using two long screws(B)

⑥

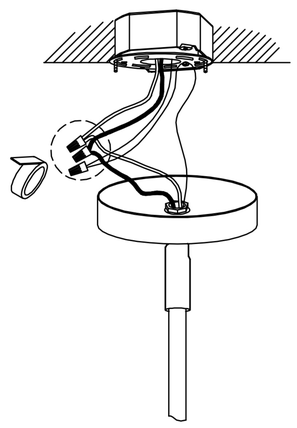

6. Install the power supply and ground wire, and wrap the wiring cap with electrical tape.

⑦

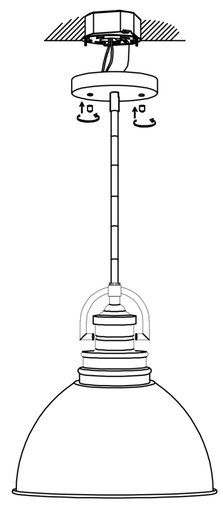

7. Lift the whole lamp upward, and tighten the two holes on the disk corresponding to the long screws on the hanging plate

⑧

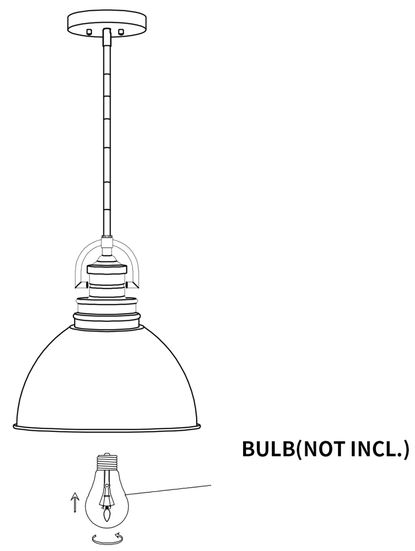

8. Install the bulb(not included).

⑨

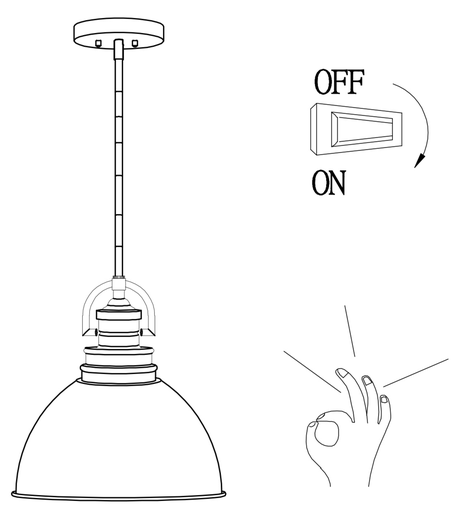

9. Turn on the power.

Notice： This light fixture should be installed in accordance with all applicable, local installation codes, and by a person familiar with the construction and operation of it, as well as the hazards involved. Inspect items and contents carefully. If any damage or defect is found, do not install it.

Accessories：
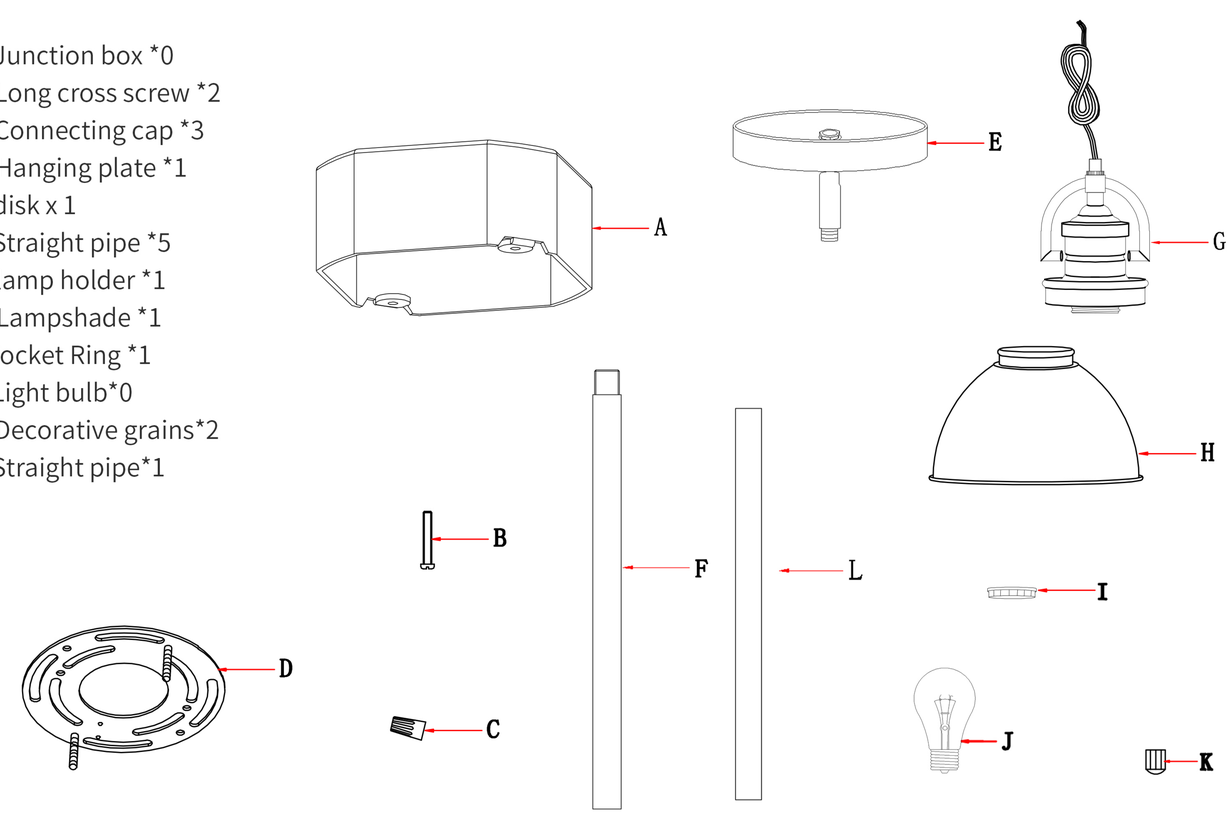
A: Junction box *0
B: Long cross screw *2
C: Connecting cap *3
D: Hanging plate *1
E: disk x 1
F: Straight pipe *5
G: lamp holder *1
H: Lampshade *1
I: Socket Ring *1
J: Light bulb*0
K: Decorative grains*2
L: Straight pipe*1