Assembly Instructions

Caution: You must read this before you proceed

Care & Maintenance

- Not for commercial use. For residential use only.
- Furniture may scratch floors. We recommend using furniture pads to protect your floors.
- Do not put hot items directly on furniture surface.
- Do not clean furniture with harsh cleansers or polish.
- Do not place furniture under direct sunlight.
- Do not place furniture near heating or cooling vents.
- Do not write on furniture without a padded barrier to protect the surface.
- Do not place furniture outside . For indoor use only.
- Stains may be removed with mild soap solution and damp cloth.
- Children should not climb or jump on the furniture.
- Dust and pick-up spills using a clean, non-colored, lint-free cloth.

Please look in the box for hardware packs and legs.

Sets often ship in multiple boxes and may arrive a day or two apart.

Bed

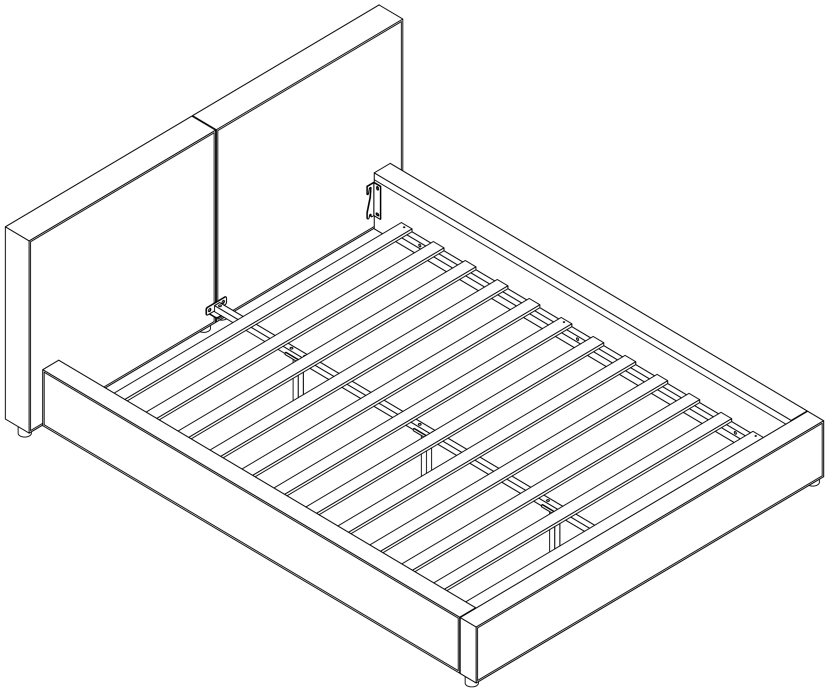

Part List

Label	Picture	Description	QTY
A	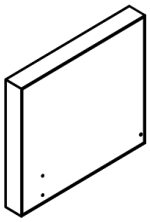	Head board(left)	1
B	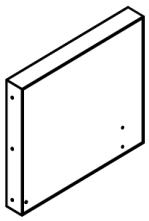	Head board(right)	1

Part List

C	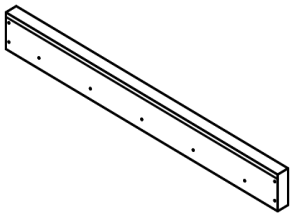	Side rail	2
D	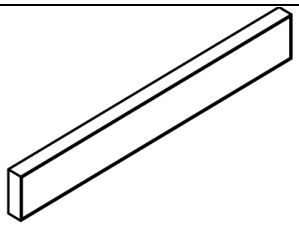	Foot board	1

E	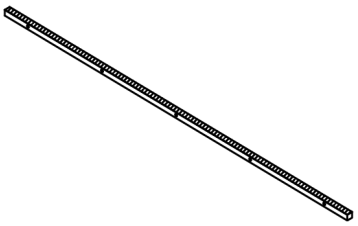	Side rails support bar	2
F	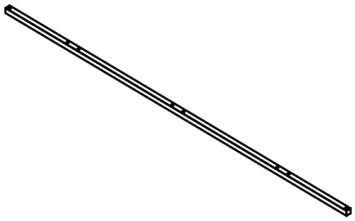	Center support bar	1
G	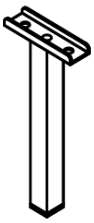	Middle support leg	3
H	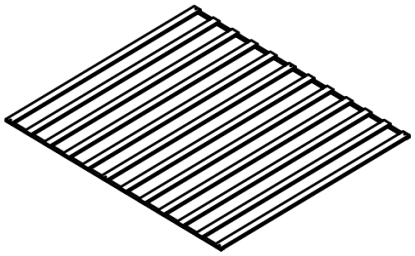	Slat	1
I	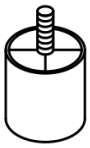	leg	6

Hardware

Label	Picture	Description	QTY
①		Allen Wrench	1
②		Bolts (M8x25mm)	20
③	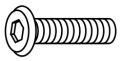	Bolts (M8x40mm)	18
④		Nails (M4x30mm)	6
⑤		Washer	6
⑥		Center support bar fittings	2
⑦		Hinge	4
⑧	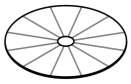	Twist gasket	6
⑨		Bolts (M8x50mm)	3
⑩		Nuts	3
⑪	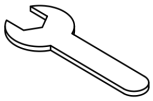	Spanner	1

Assembly Preparation

Before Beginning Assembly:

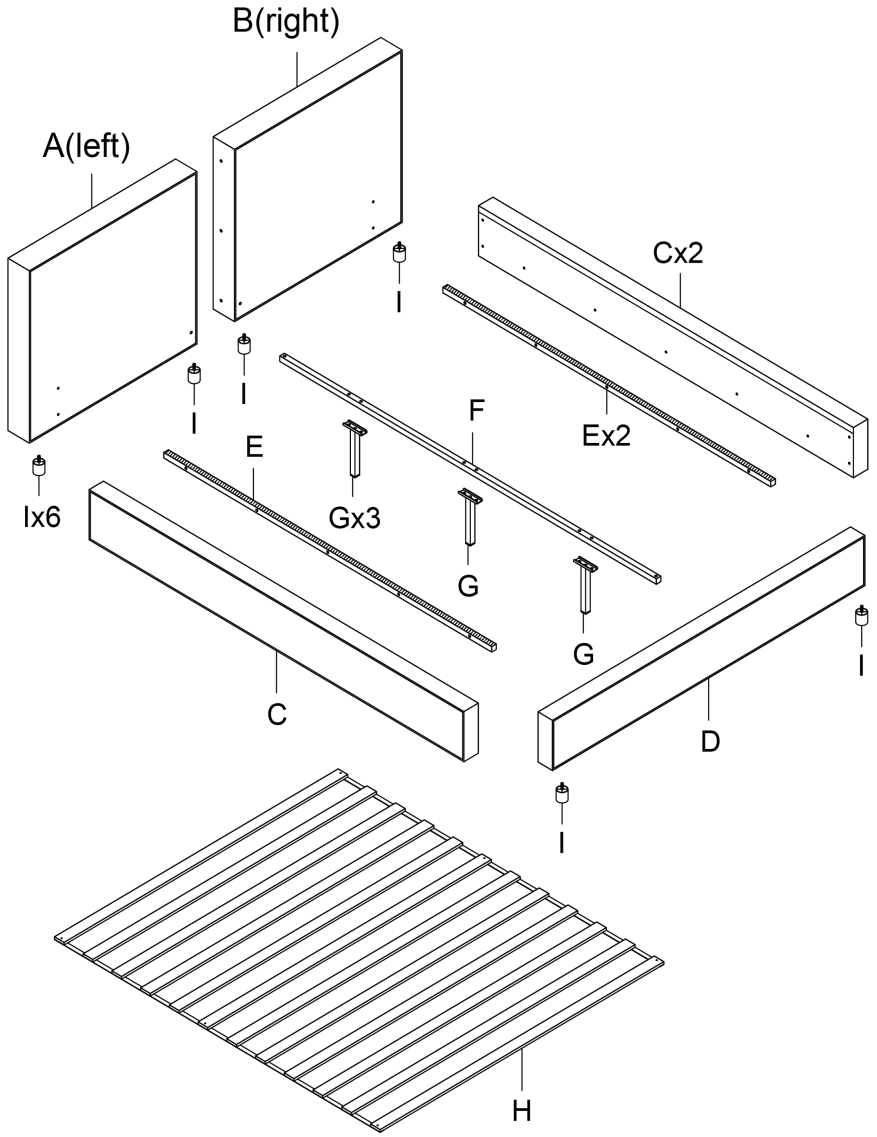

	6 x2

- Read instructions, cover to cover-
- Have 2 adults on hand for assembly-
- Do not assemble on flooring or carpet-
- Assemble on a clean non-marring surface (packing foam)-
- Save all packaging until finished-

Assembly Steps

OVERVIEW

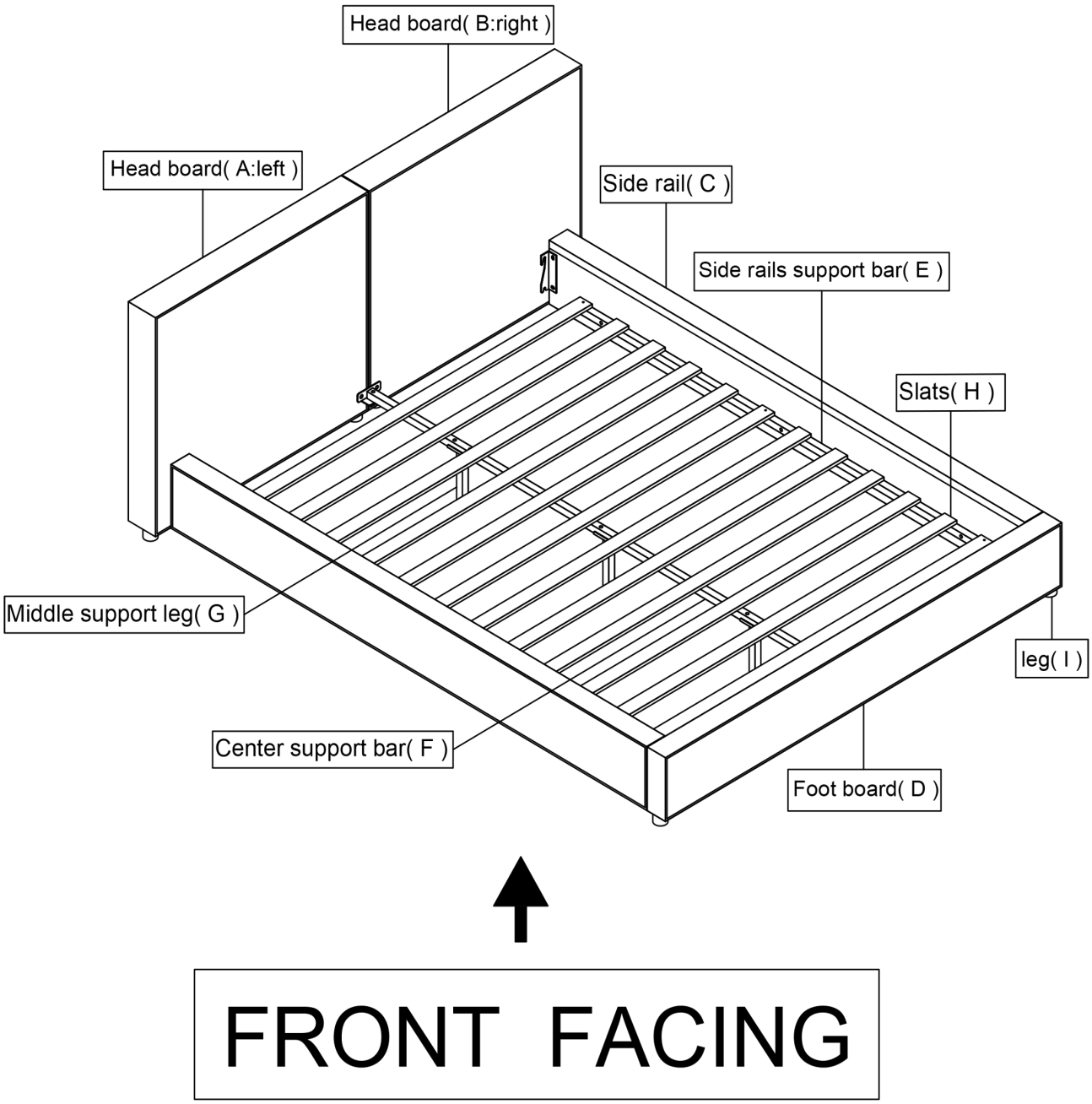

This Bed have multiple parts and may require up to 45 minutes to assemble. To give you an overview of the Bed parts, the above picture is to help you put the various parts into perspective. Please read through the instructions below to familiarise yourself with the parts and steps before assembly.

Note: It is recommended that you have an adult partner to assist during the entire assembly process.

Step 1

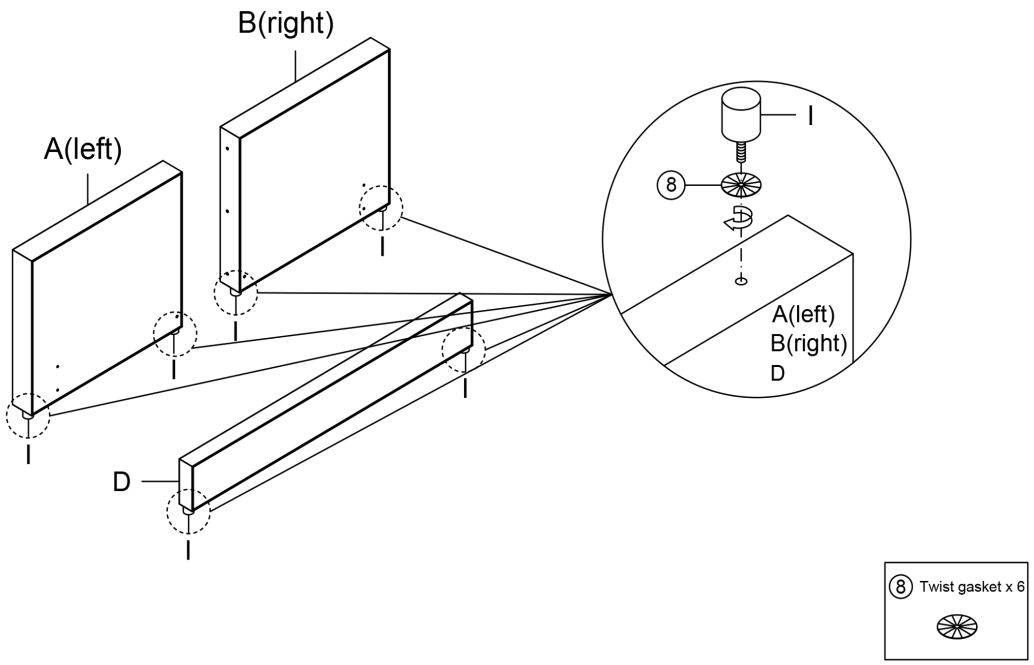

Attach the leg I to the Head board A (left) ,Head board B (right) and Foot board D with Twist gasket ⑧.

Step 2

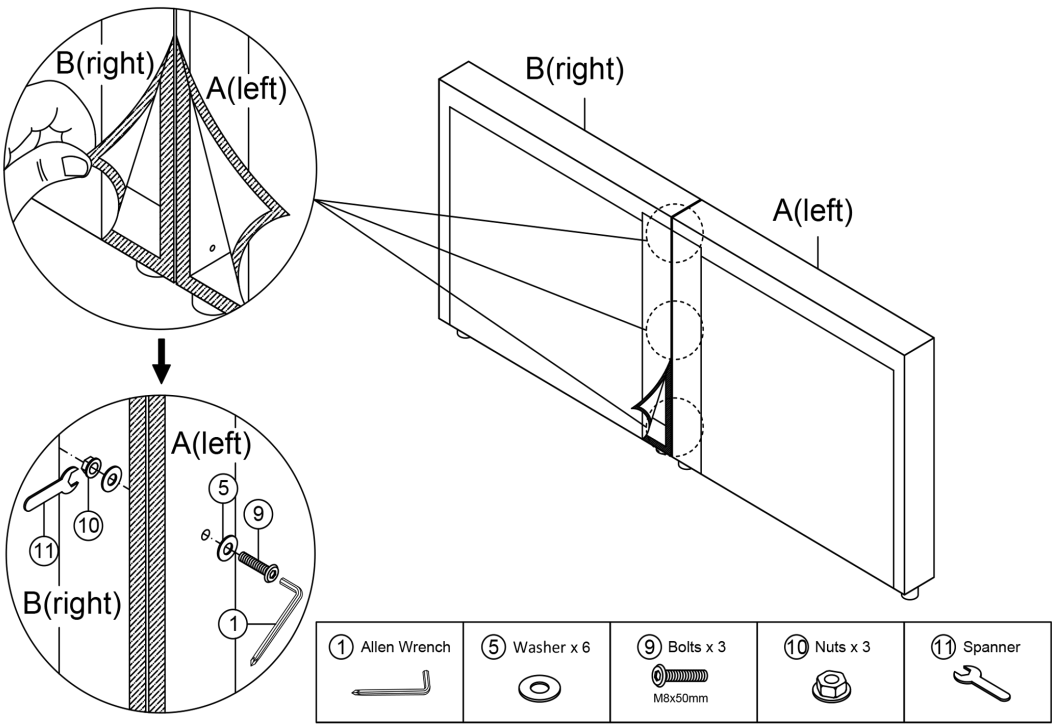

Attach the Head board A (left) to the Head board B (right) with Washer ⑤, Bolts ⑨ and Nuts ⑩ by using Allen Wrench ① and Spanner ⑪

Step 3

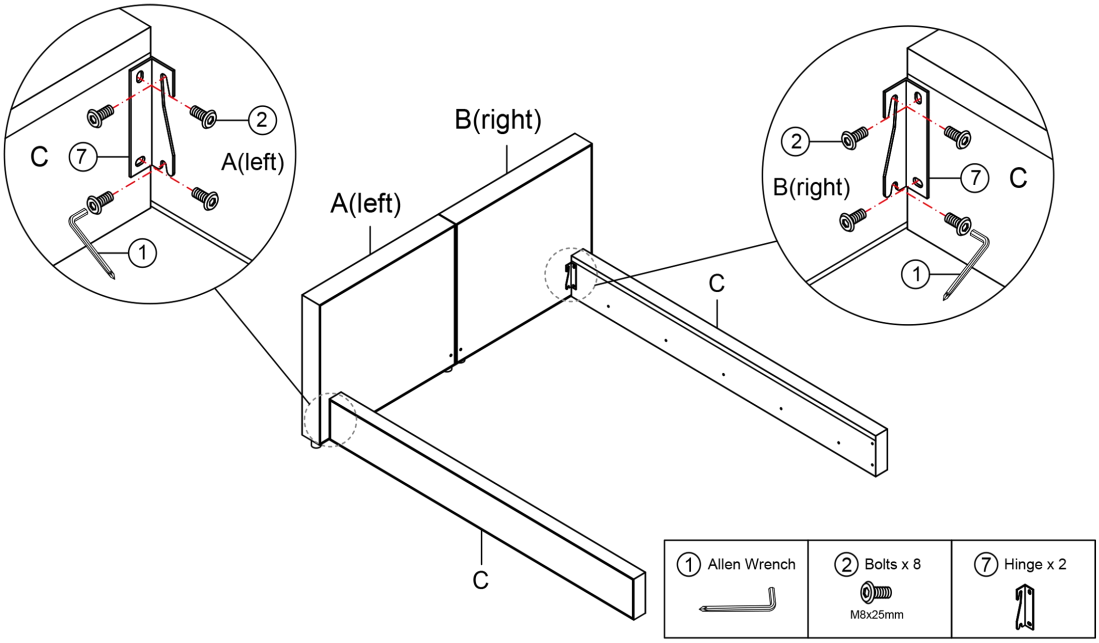

Attach the Side rail C to the Head board A (left) and Head board B (right) with Bolts ② and Hinge ⑦ by using Allen Wrench ①.

Step 4

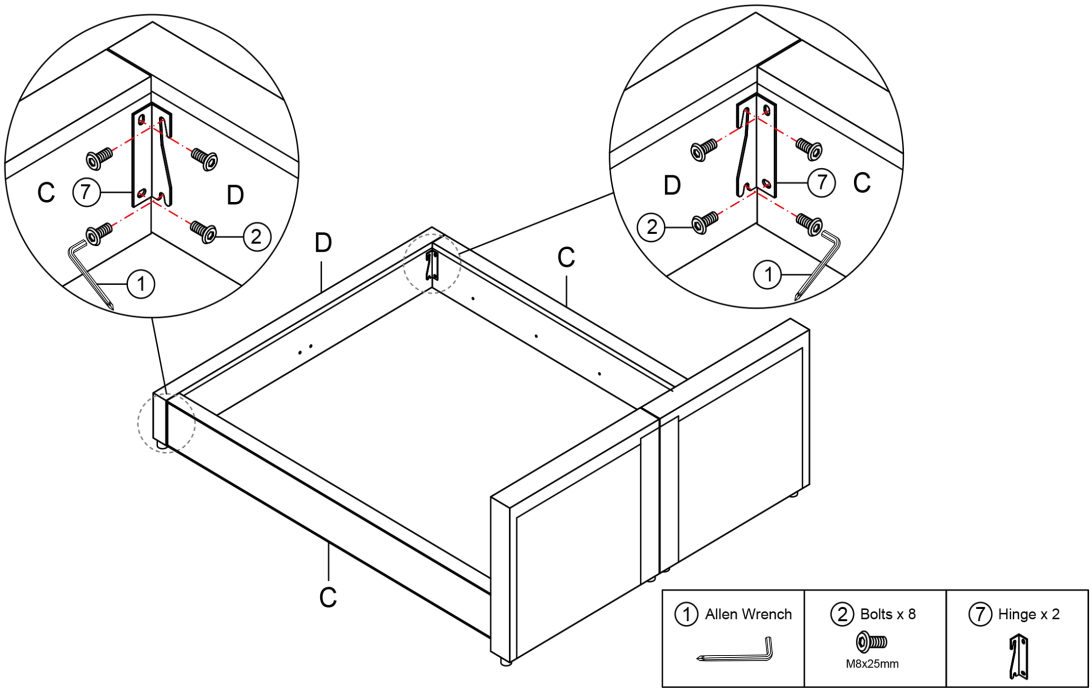

Attach the Foot board D to the Side rail C with Bolts ② and Hinge ⑦ by using Allen Wrench ①.

Step 5

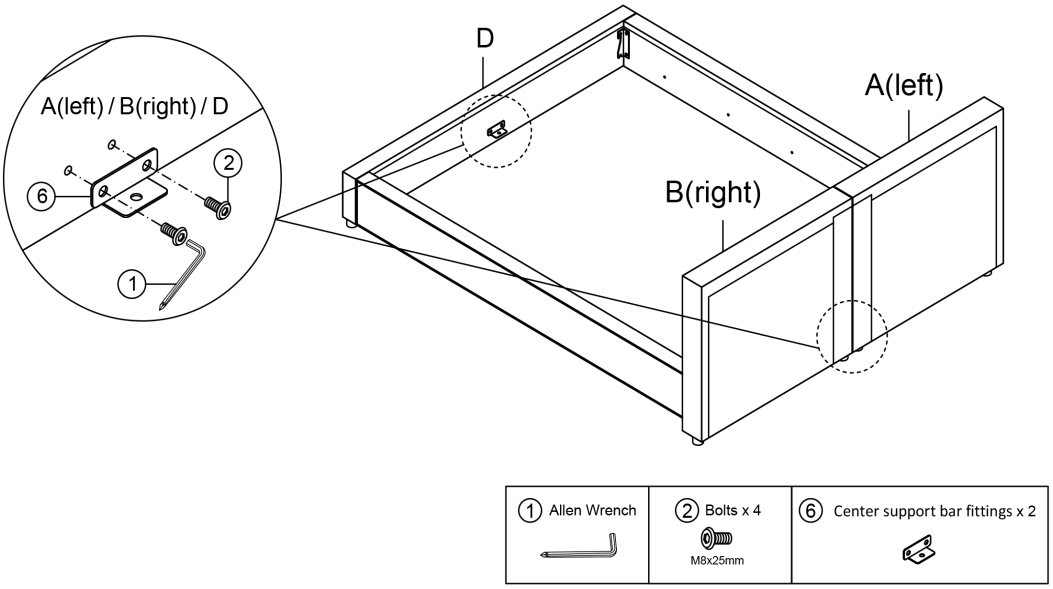

Attach the Center support bar fittings ⑥ to the Head board A (left) ,Head board B (right) and Foot board D with Bolts ② by using Allen Wrench ①.

Step 6

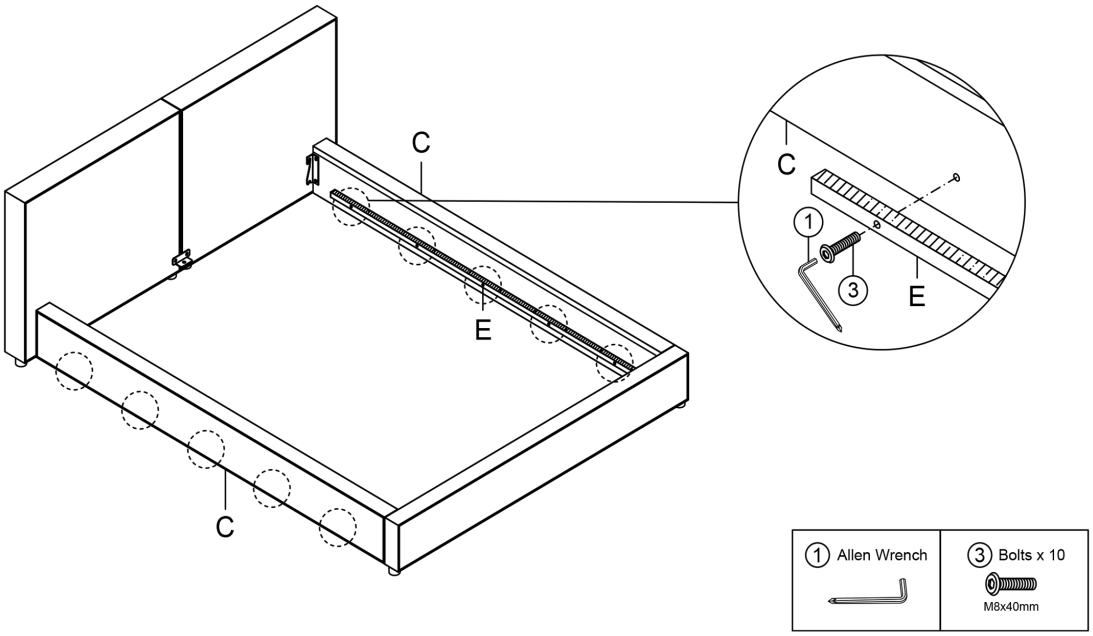

Attach the Side rails support bar E to the Side rail C with Bolts ③ by using Allen Wrench ①.
NOTICE:DO NOT FULLY TIGHTHEN BOLTS IN ONE GO, TIGHTEN THE BOLTS AFTER 10 BOLTS ③ ARE ATTACHED.

Step 7

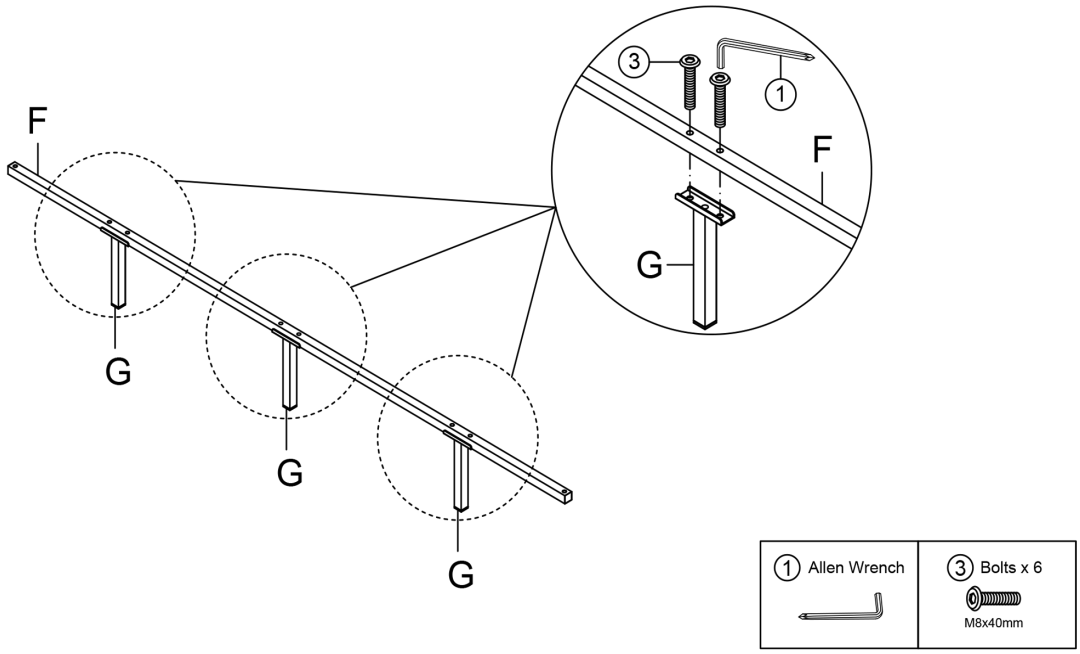

Attach the Middle support leg G to the Center support bar F with Bolts ③ by using Wrench ①.

Step 8

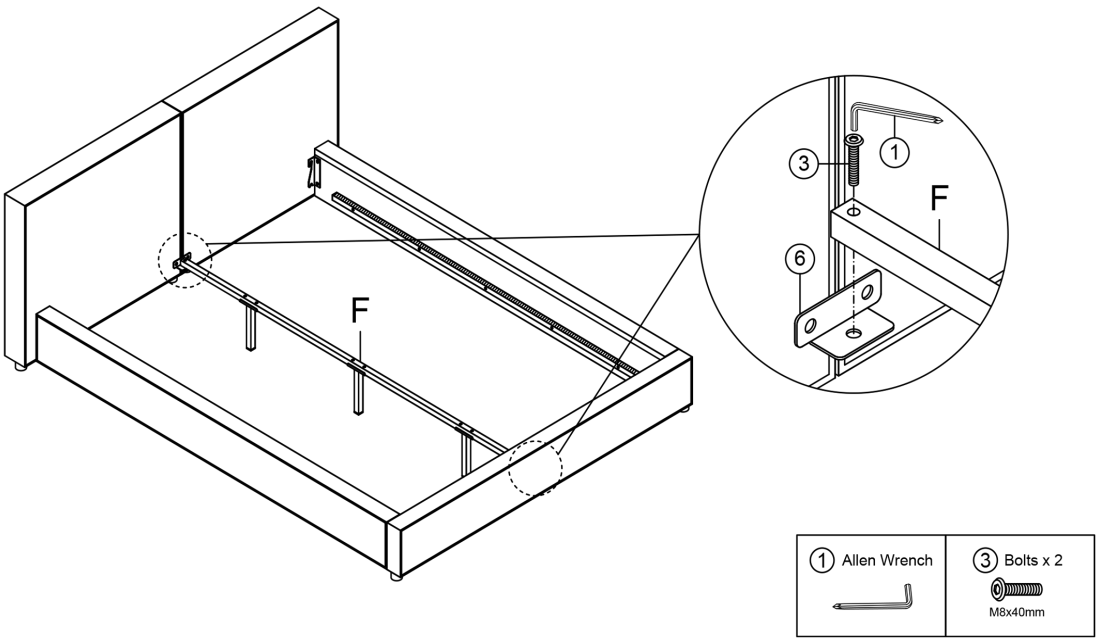

Attach the Center support bar F to the Center support bar fittings ⑥ with Bolts ③ by using Wrench ①.

Step 9

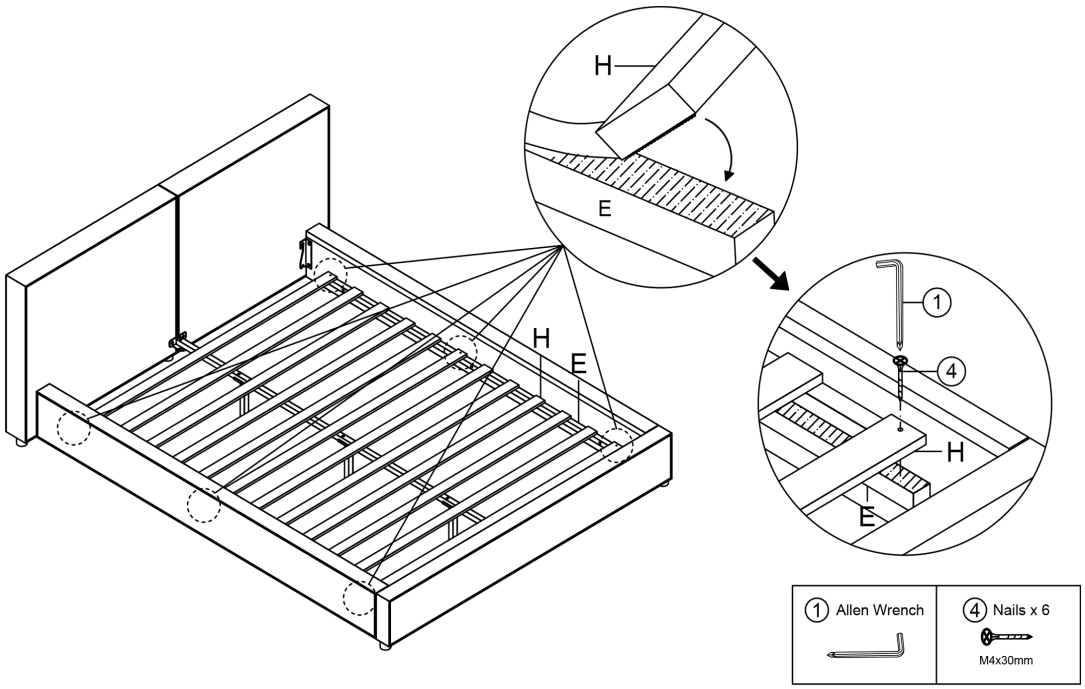

Attach the Slats H to the Side rails support bar E with Nails ④ by using Allen Wrench ①.

Step 10

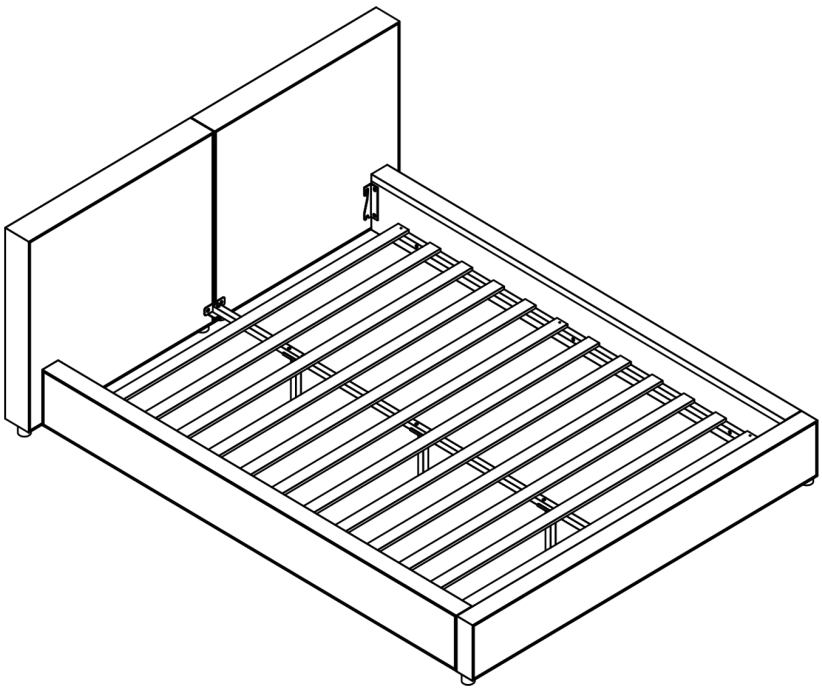

Your Bed is ready for use.
This Bed can only be used on a flat, level surface.

Place the Bed on a LEVEL SURFACE.
Inspect it and make sure all parts are adequately connected.
Don't push too hard, shake on the bed.
This would help to align all the parts at all the joint areas.
CAUTION 1: When tightenlng these screws, tighten sequentlally.
DO NOT tighten any screw fully and then towards the next one.
Thls would cause the frame to warp.
If there is stlll wobbles, loosen the screws and execute this same process.DO NOT tlghten any screw fully and then towards the next one.
WARNING!! IF BED IS NOT STABLE,IT COULD LEAD TO DAMAGING THE PRODUCT.
Ensure all screws are fully locked into position.