Assembly instruction Q

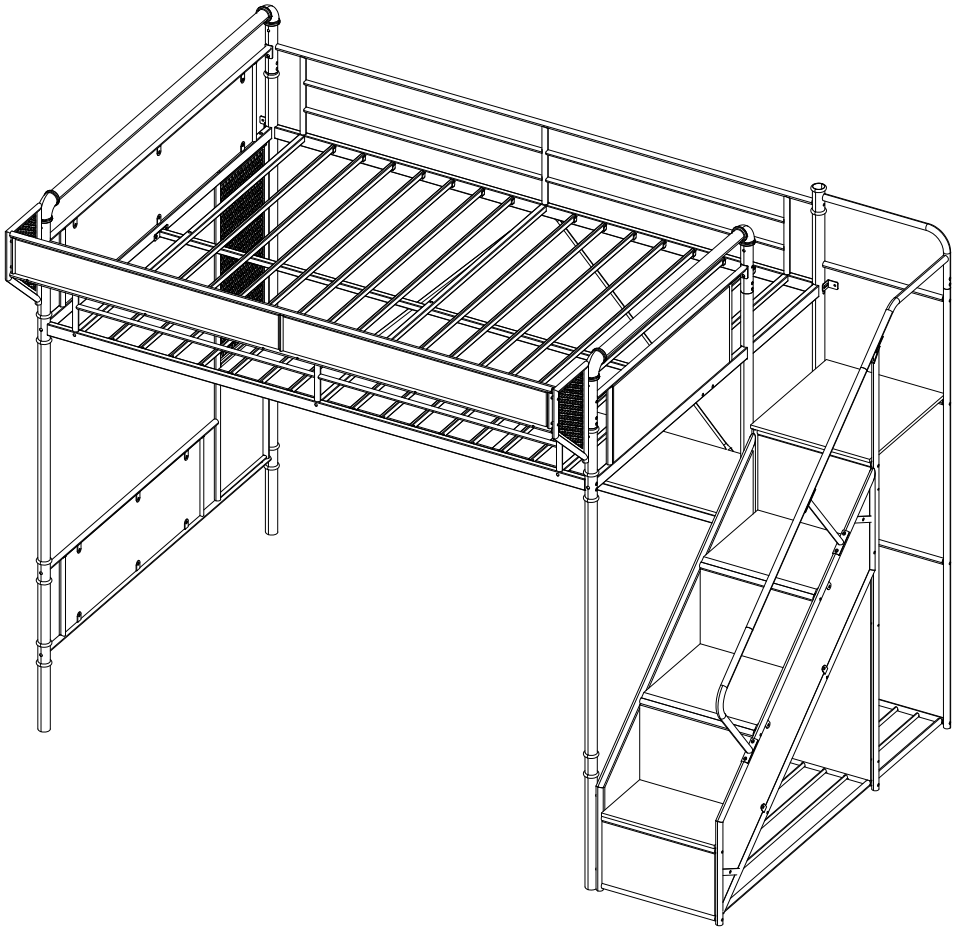

Assembly instruction Q

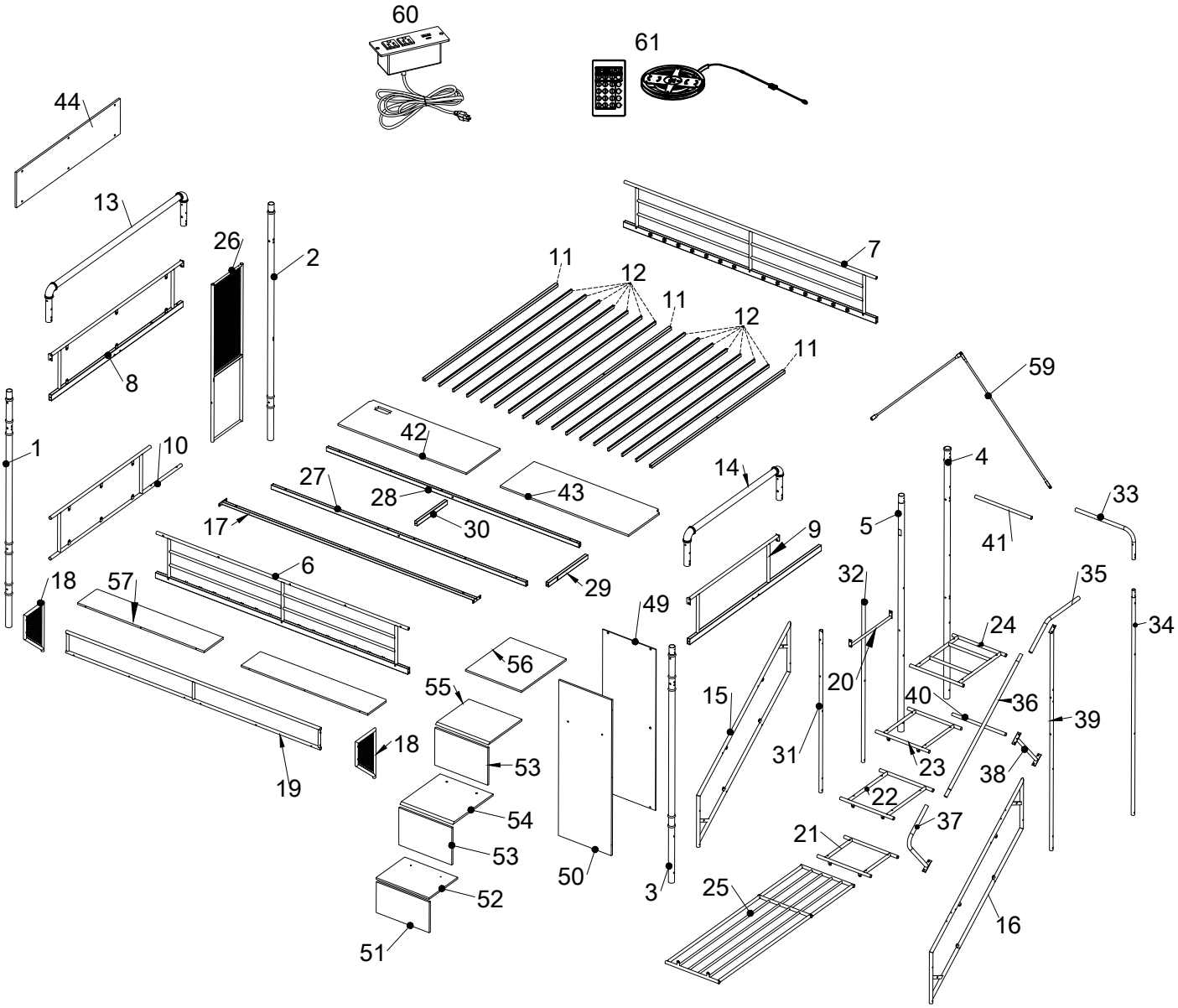

① x1 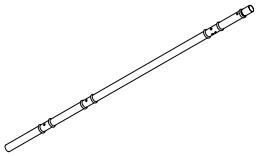	② x1 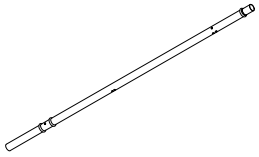	③ x1 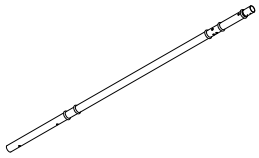
④ x1 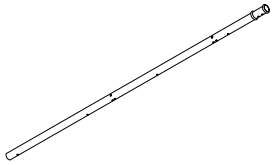	⑤ x1 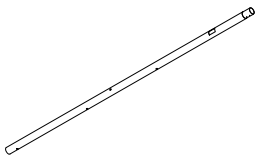	⑥ x1 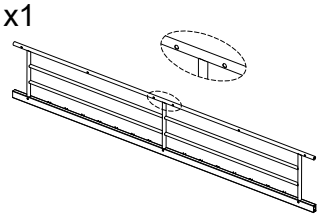
⑦ x1 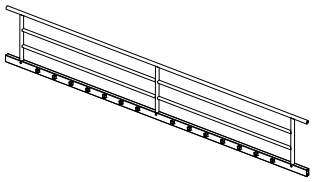	⑧ x1 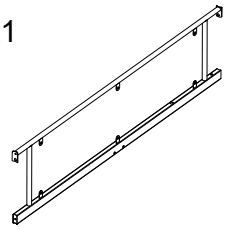	⑨ x1 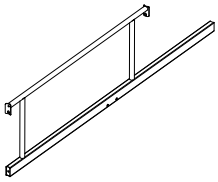
⑩ x1 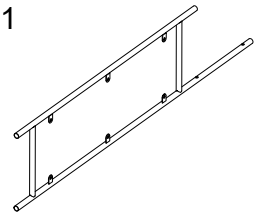	⑪ x3 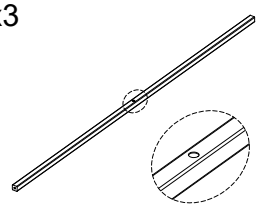	⑫ x14 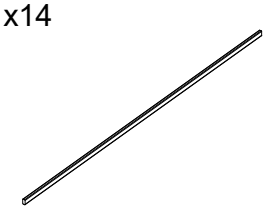
⑬ x1 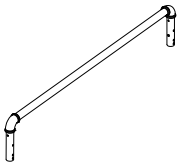	⑭ x1 	⑮ x1 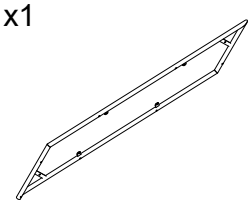
⑯ x1 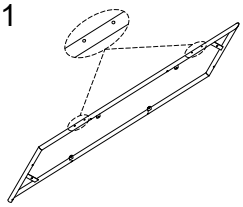	⑰ x1 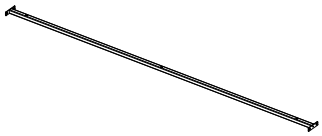	⑱ x2 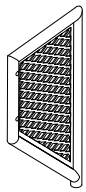
⑲ x1 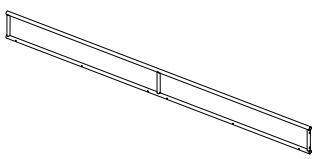	⑳ x1 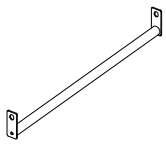	㉑ x1 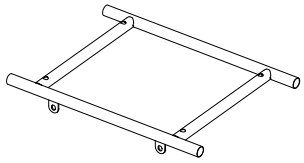
㉒ x1 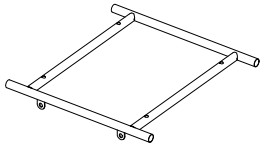	㉓ x1 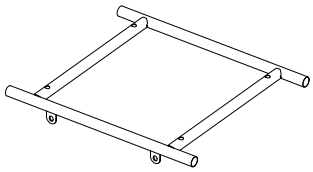	㉔ x1 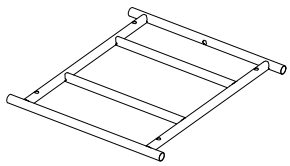

㉕ x1

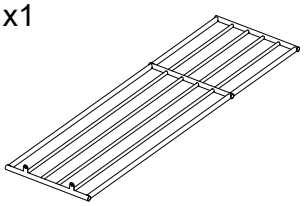

㉖ x1

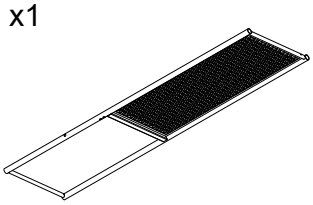

㉗ x1

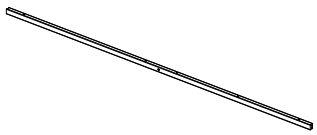

㉘ x1

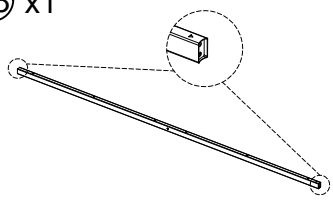

㉙ x1

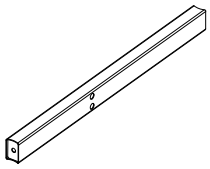

㉚ x1

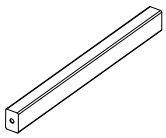

㉛ x1

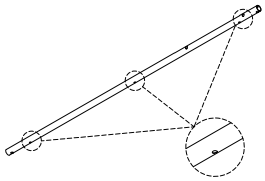

㉜ x1

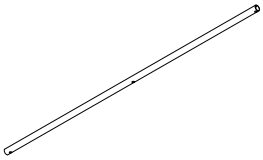

㉝ x1

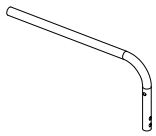

㉞ x1

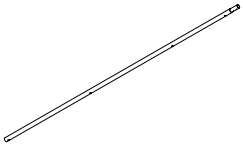

㉟ x1

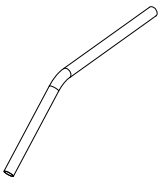

㊱ x1

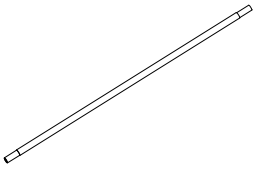

㊲ x1

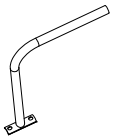

㊳ x1

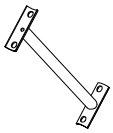

㊴ x1

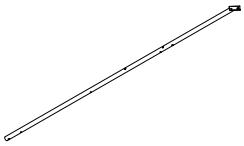

㊵ x1

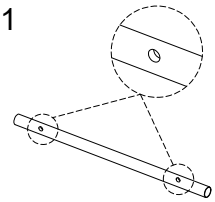

㊶ x1

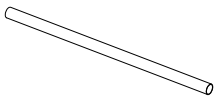

㊷ x1

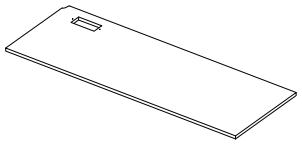

㊸ x1

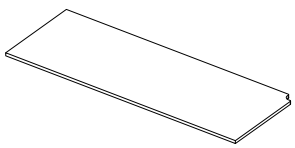

㊹ x1

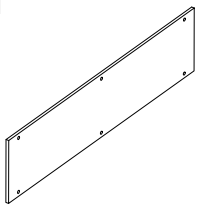

㊾ x1

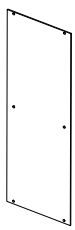

㊿ x1



(51) x1

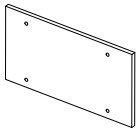

(52) x1

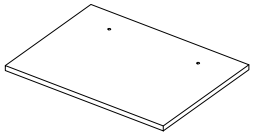

⑤③ x2 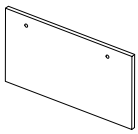	⑤④ x1 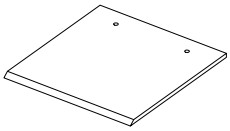	⑤⑤ x1 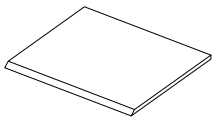
⑤⑥ x1 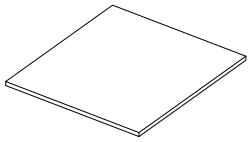	⑤⑦ x2 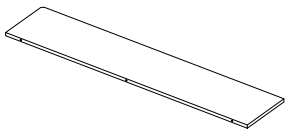	⑤⑨ x2 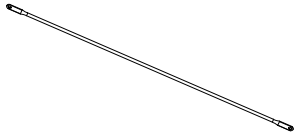
⑥⓪ x1 	⑥① x1 	

Hardware List

A×12 (1+extra) 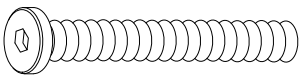 M8×60mm	B×16(1+extra) 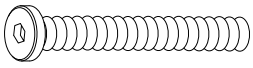 M6×60mm	C×19(1+extra) 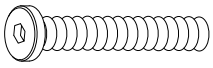 M6×50mm
D×51 (5+extra) 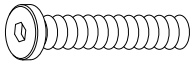 M6×38mm	E×23 (2+extra) 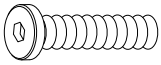 M6×27mm	F×16 (1+extra) 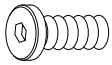 M6×15mm
G×37(3+extra) 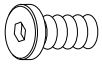 M6×10mm	H×4(1+extra) 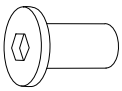 M6×15mm	I×2 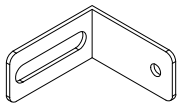
J×2 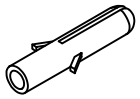 M8×40mm	K×2 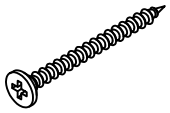 M5×40mm	L×2 L-1  M4 L-2 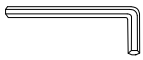 M4
M×2  M4×12mm	N×24(2+extra)  M5×37mm	O×35(3+extra)  Ø18*Ø8.5*1.5T
P×4 	Q×2  M3	

1



A×2pcs

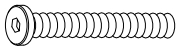

M8×60mm

O×2pcs



Ø18*Ø8.5*1.5T

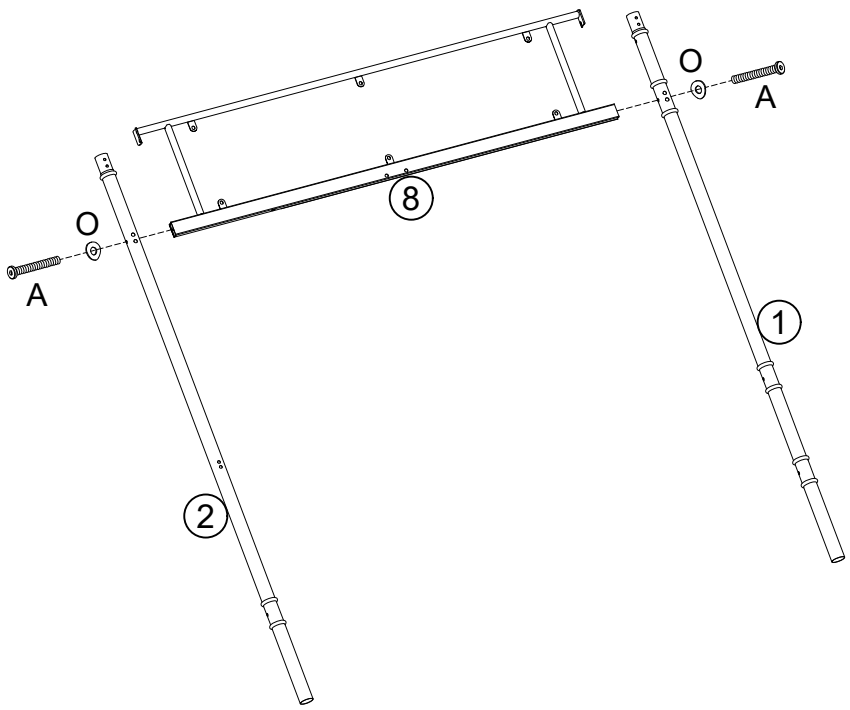

2



Pay attention to the hole position facing this side

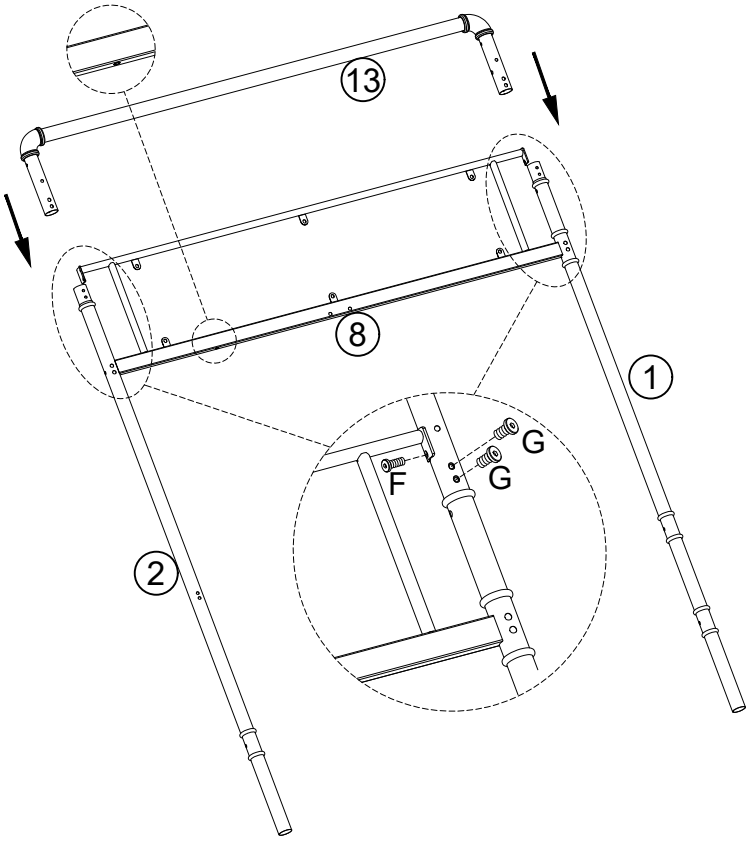

F×2pcs



M6×15mm

G×4pcs



M6×10mm

3



C×2pcs



M6×50mm

Tighten the screws 100%

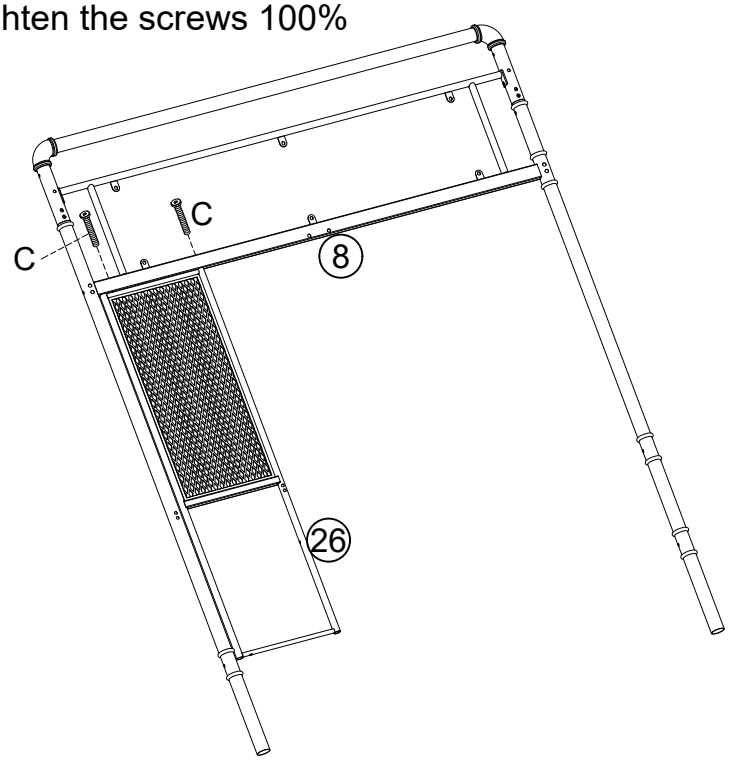

4



C×3pcs

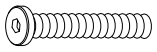

M6×50mm

E×3pcs



M6×27mm

O×3pcs



Ø18*Ø8.5*1.5T

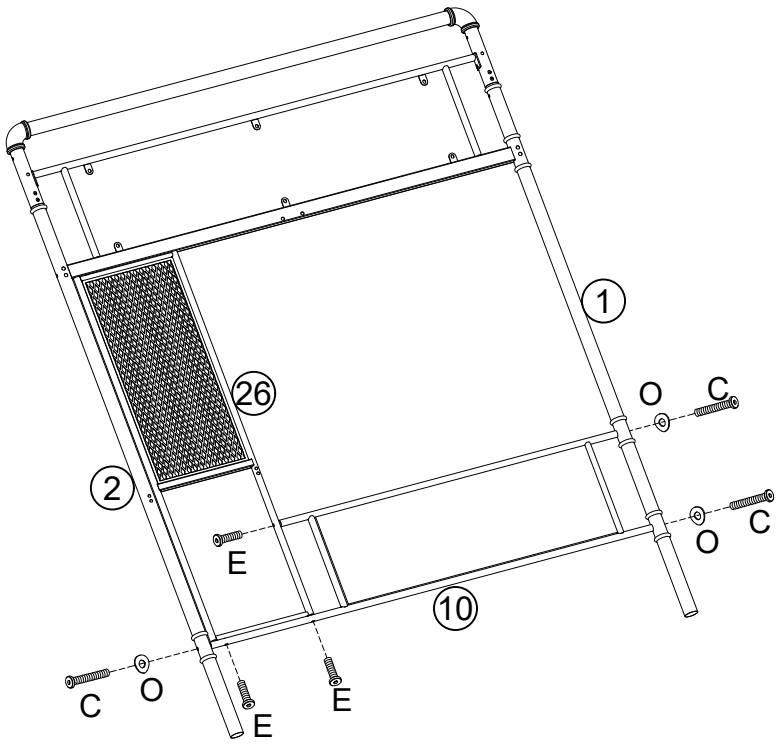

5

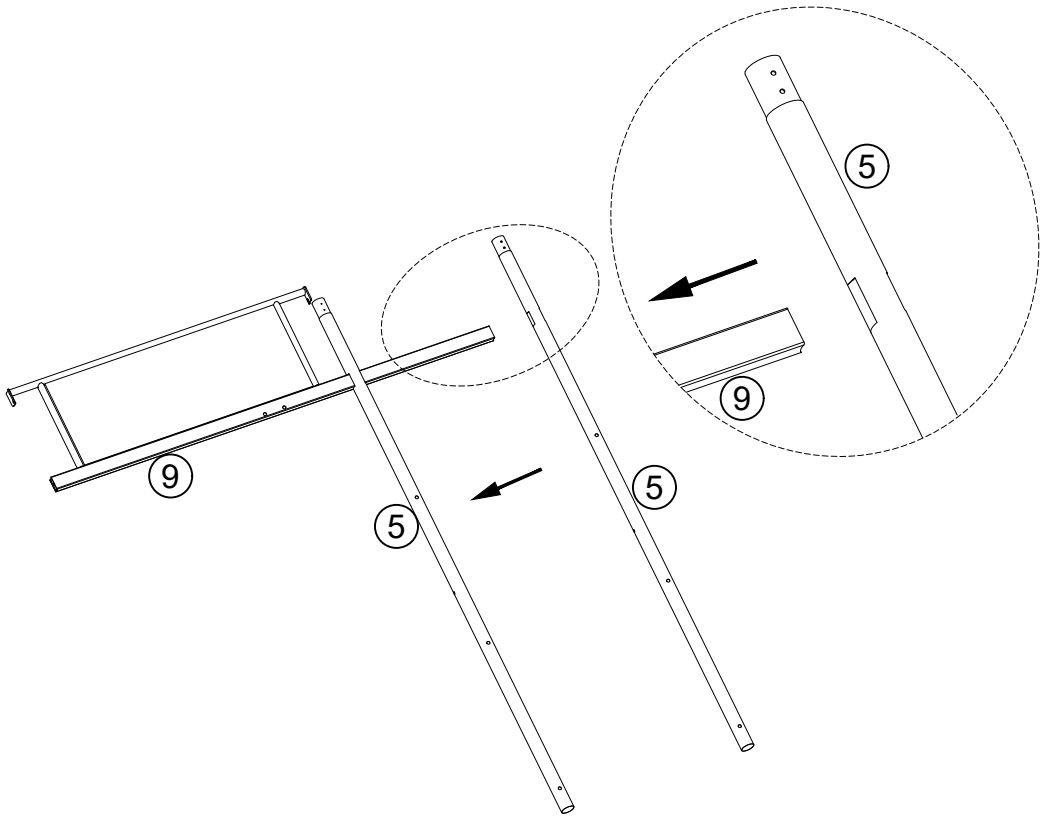

6



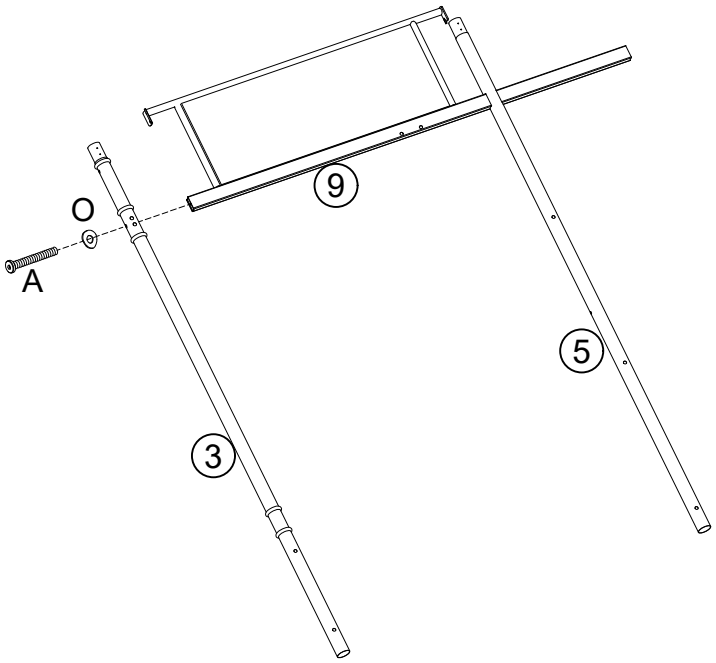

A×1pc



M8×60mm

O×1pc



Ø18*Ø8.5*1.5T

7



F×2pcs



M6×15mm

G×4pcs



M6×10mm

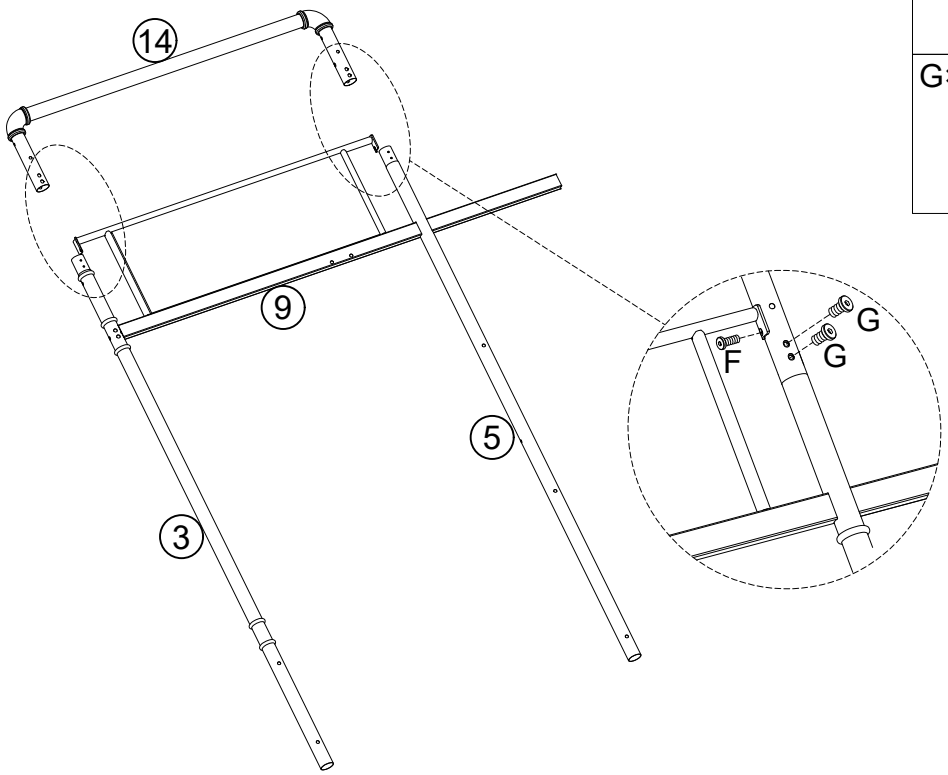

8



A×1pc



M8×60mm

B×2pcs

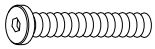

M6×60mm

O×3pcs



Ø18*Ø8.5*1.5T

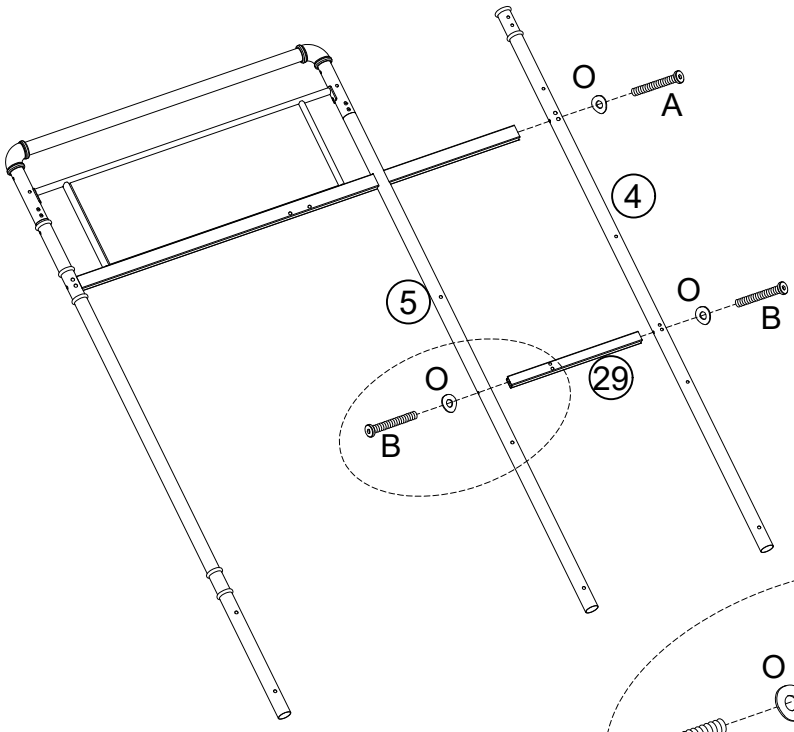

Pay attention to the hole position facing this side

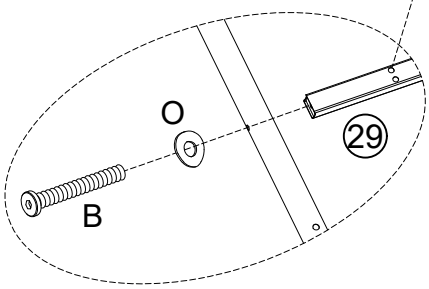

9



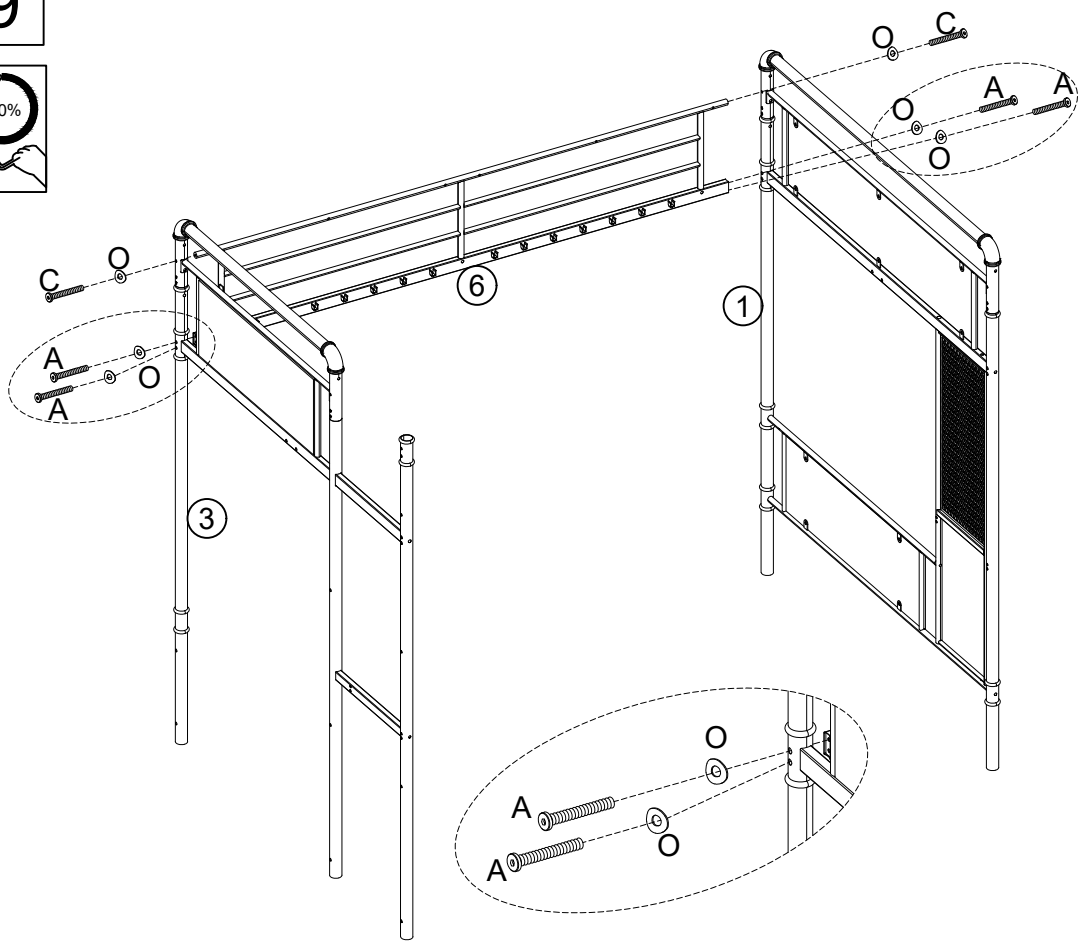

A×4pcs

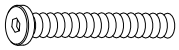

M8×60mm

C×2pcs

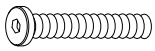

M6×50mm

O×6pcs



Ø18*Ø8.5*1.5T

10



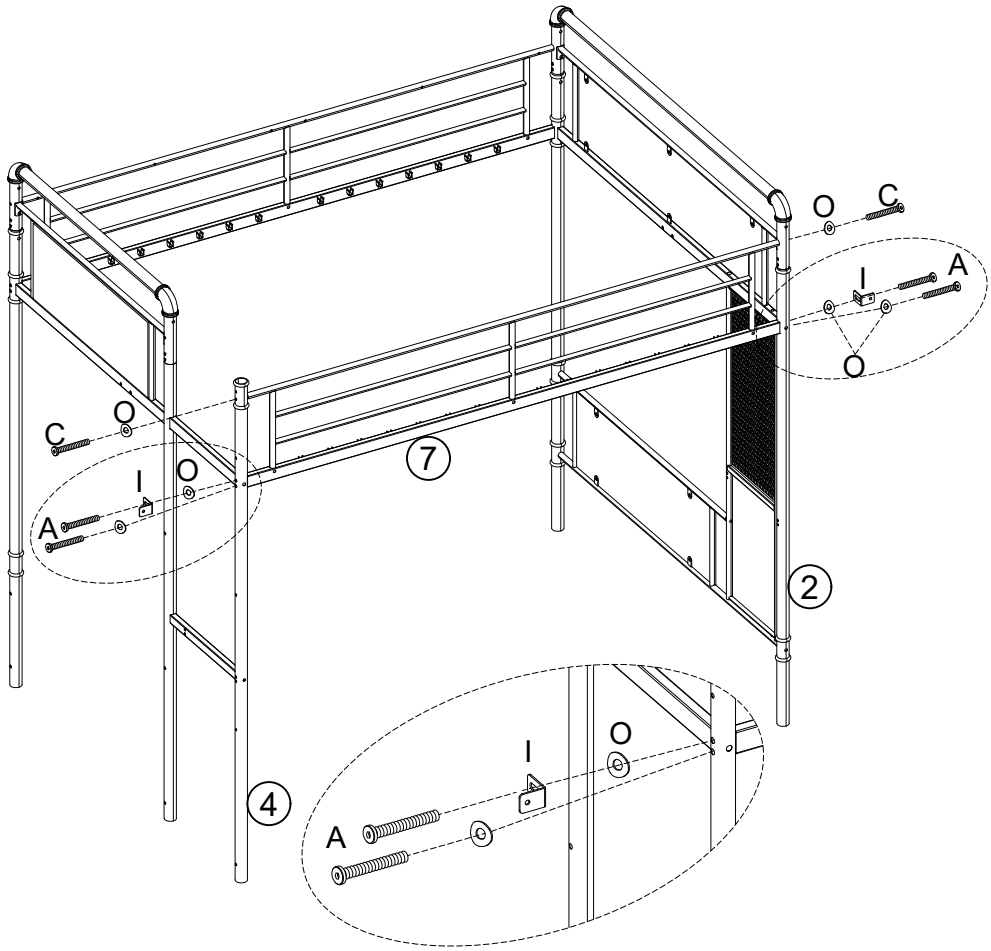

A×4pcs



M8×60mm

C×2pcs

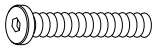

M6×50mm

O×6pcs



Ø18*Ø8.5*1.5T

I×2pcs



Ø18*Ø8.5*1.5T

11



G×6pcs



M6×10mm

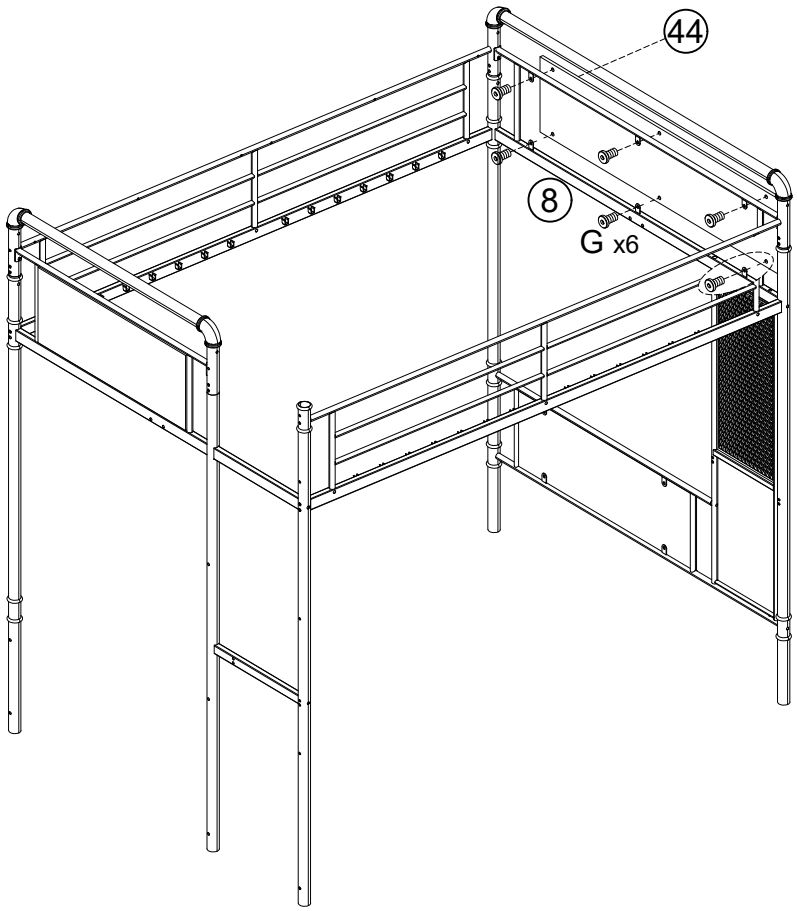

12



D×4pcs



M6×38mm

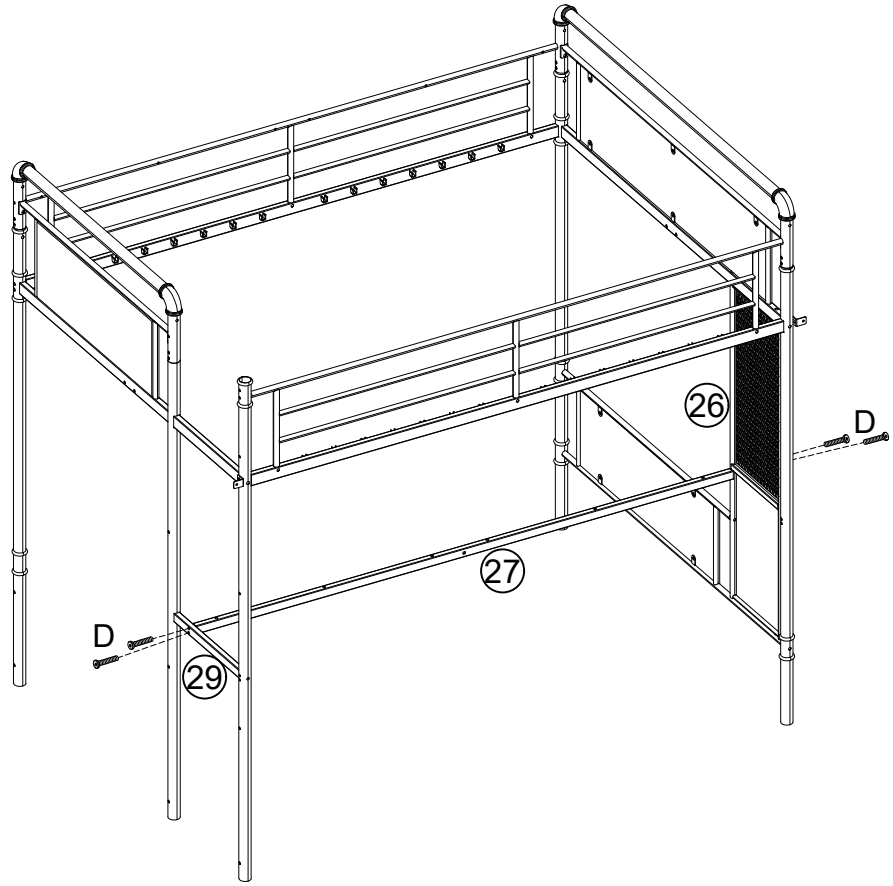

13



B×4pcs



M6×60mm

O×4pcs



Ø18*Ø8.5*1.5T

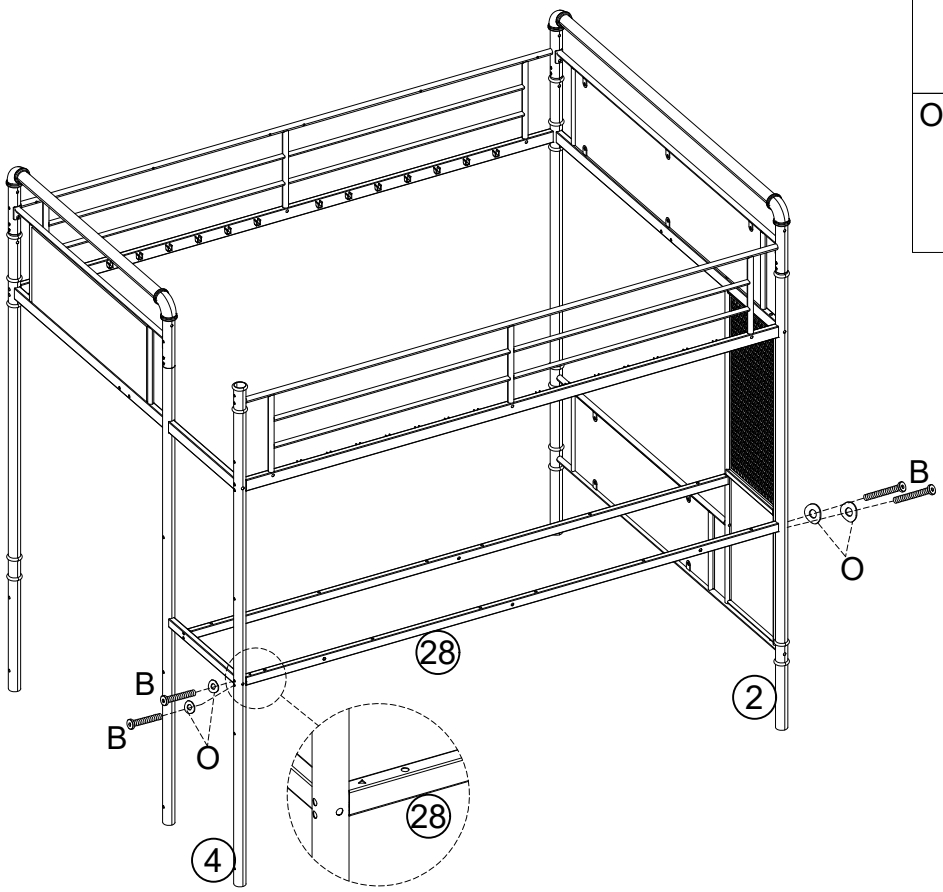

14



D×2pcs



M6×38mm

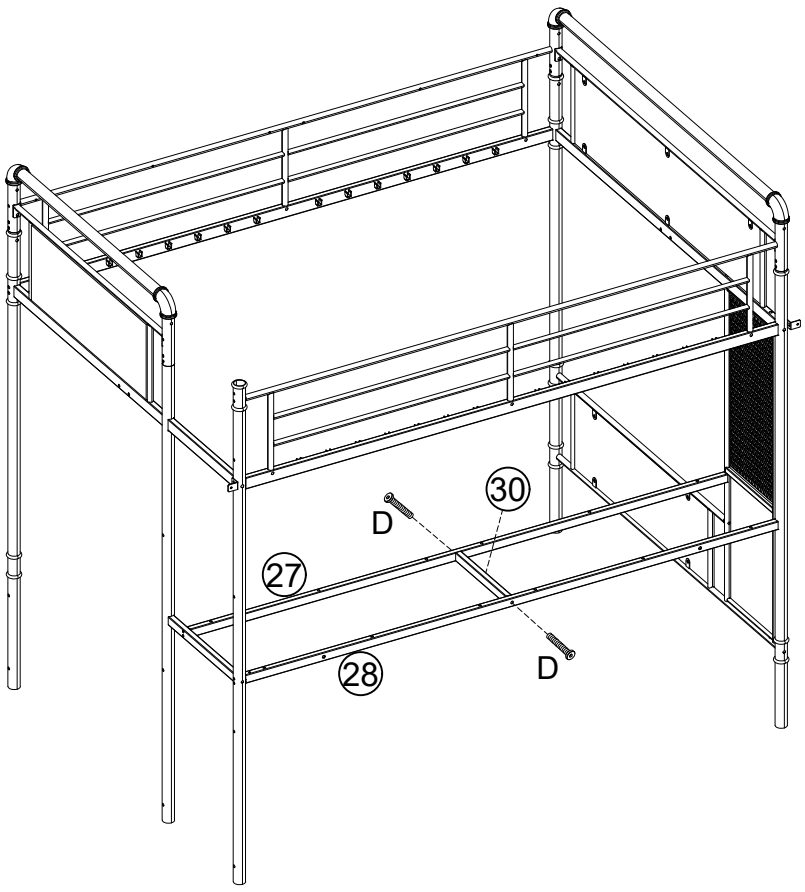

15



D×6pcs



M6×38mm

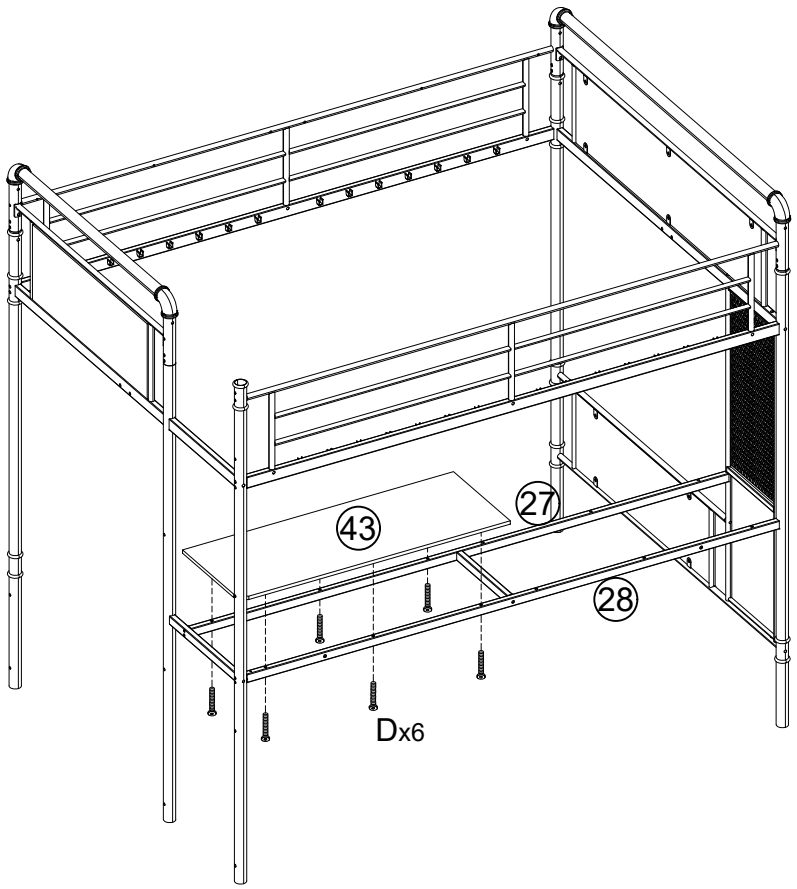

16



D×6pcs

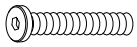

M6×38mm

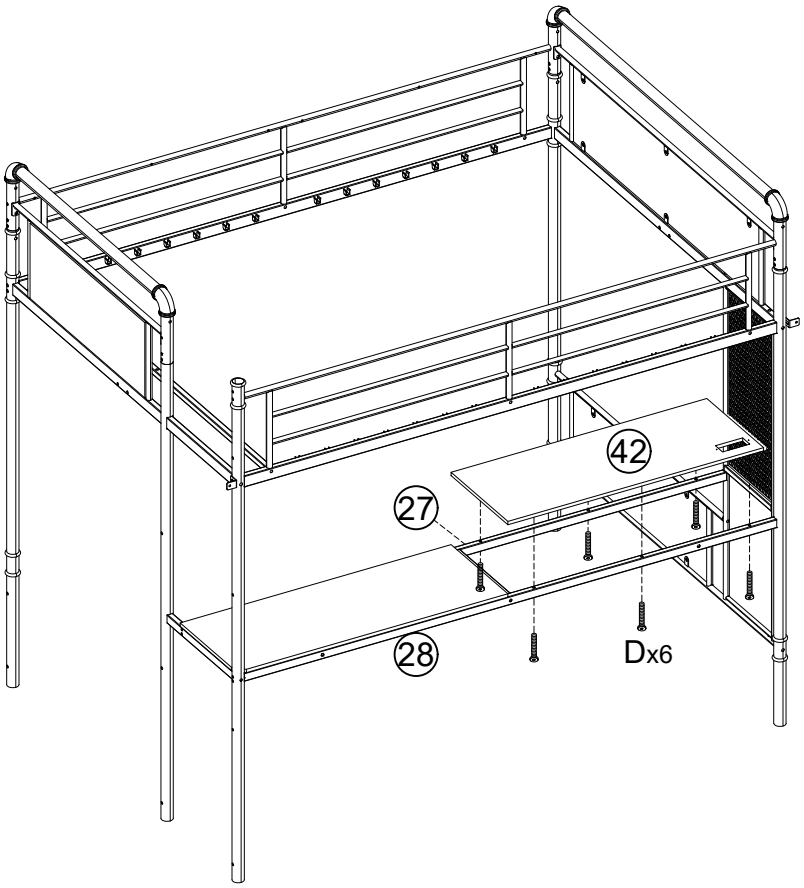

17

100%

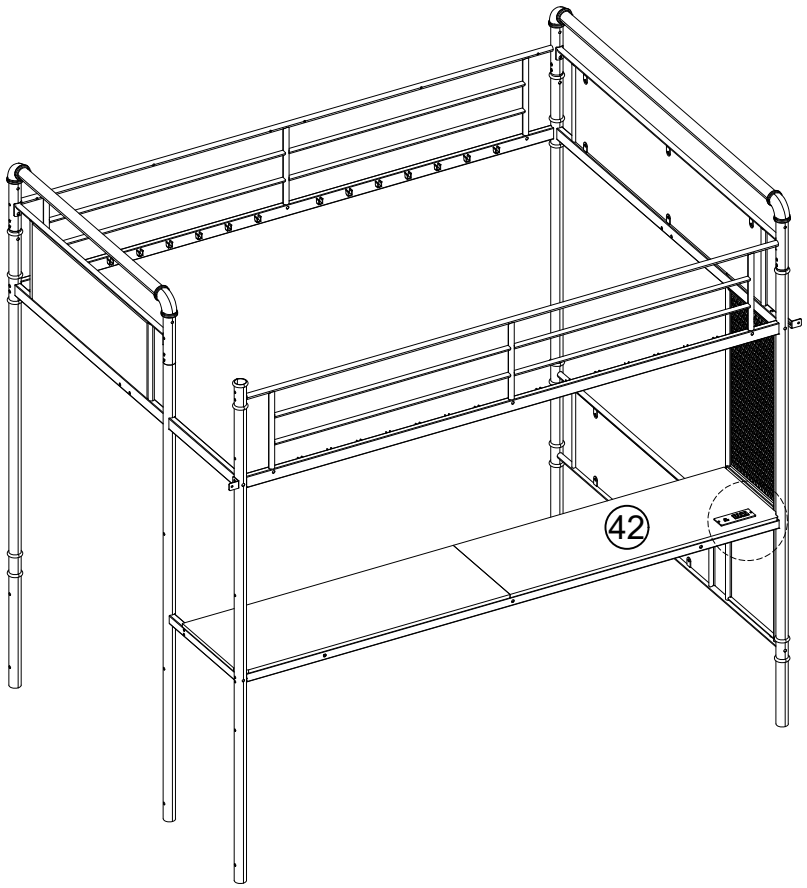

M×2pcs



M6×50mm

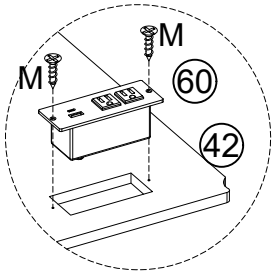

18

80%

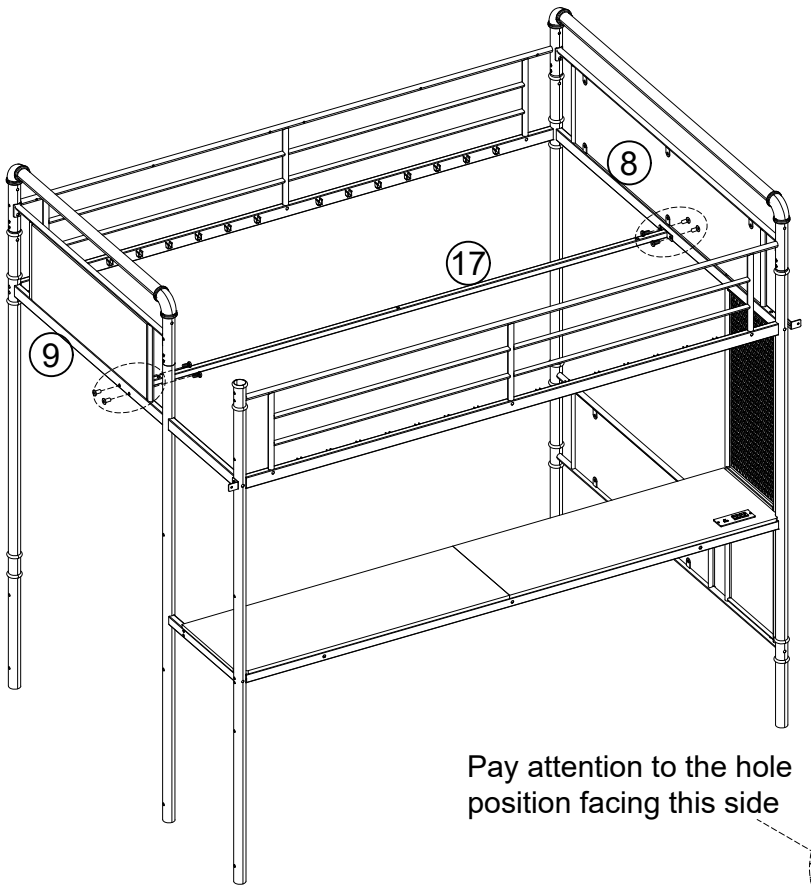

F×4pcs



M6×15mm

H×4pcs



M6×15mm

Pay attention to the hole position facing this side

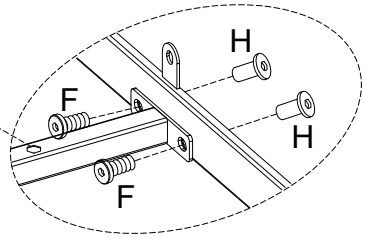

19



C×6pcs

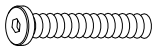

M6×50mm

F×2pcs



M6×15mm

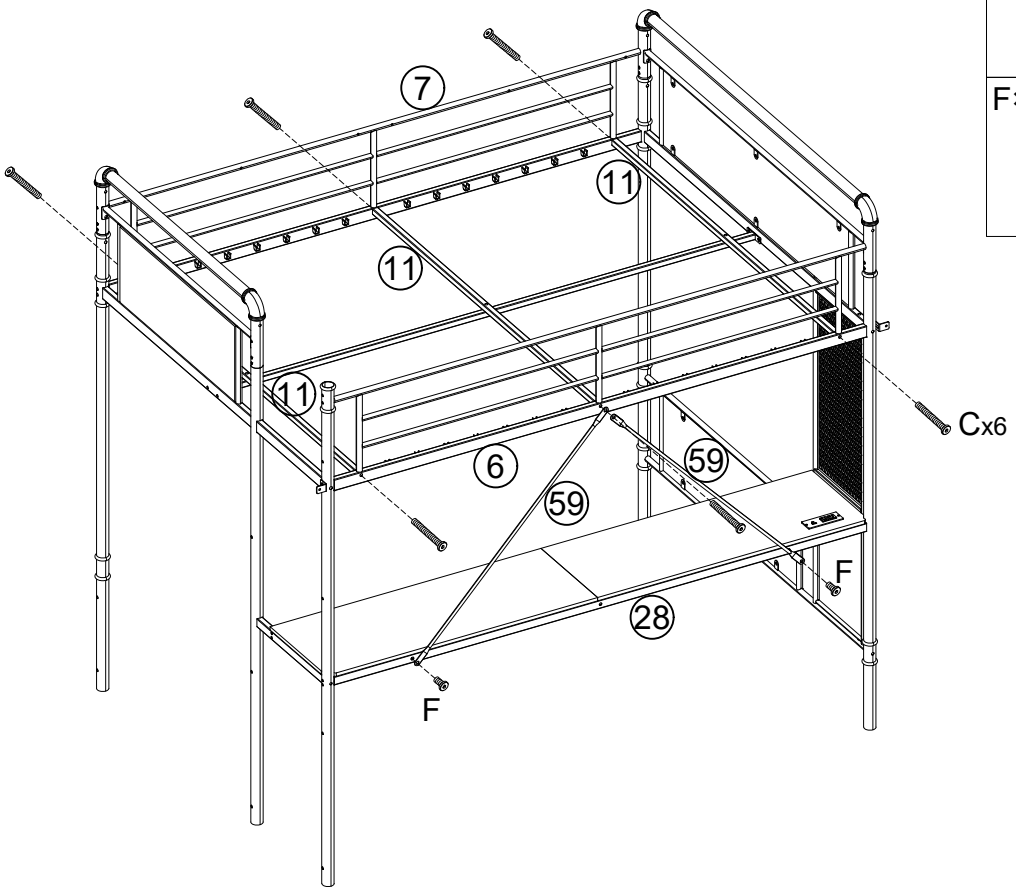

20



D×3pcs



M6×38mm

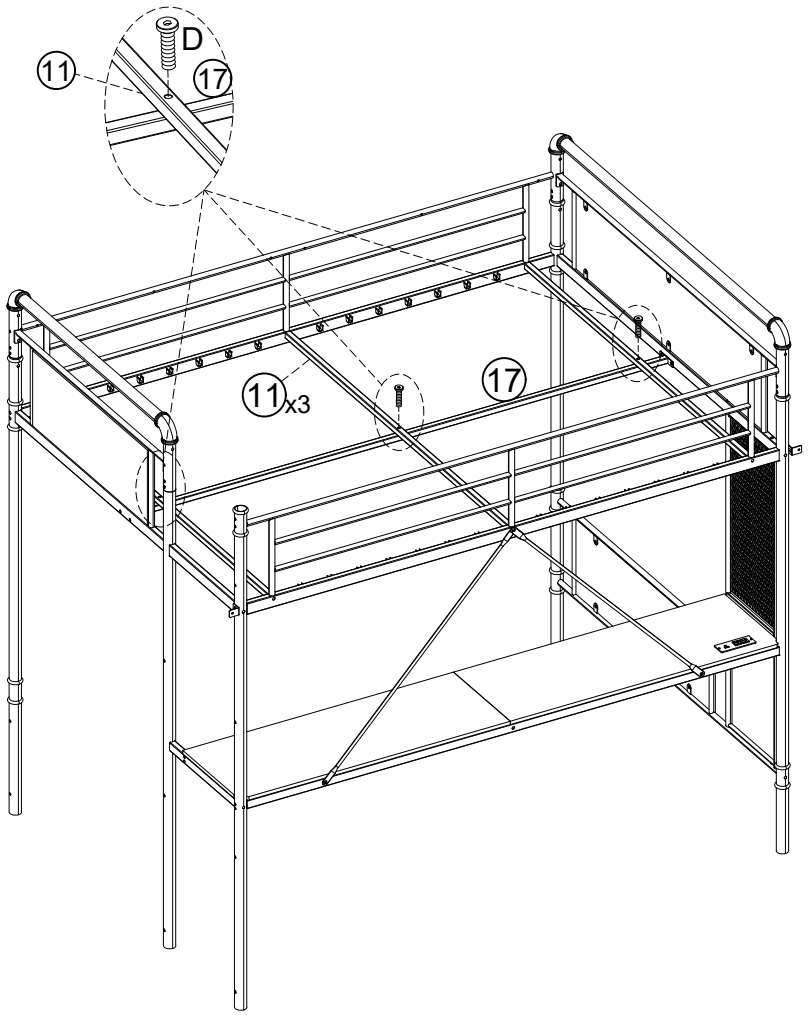

21

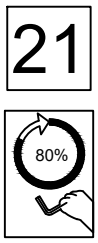

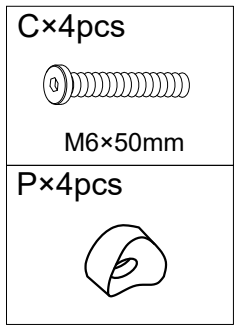

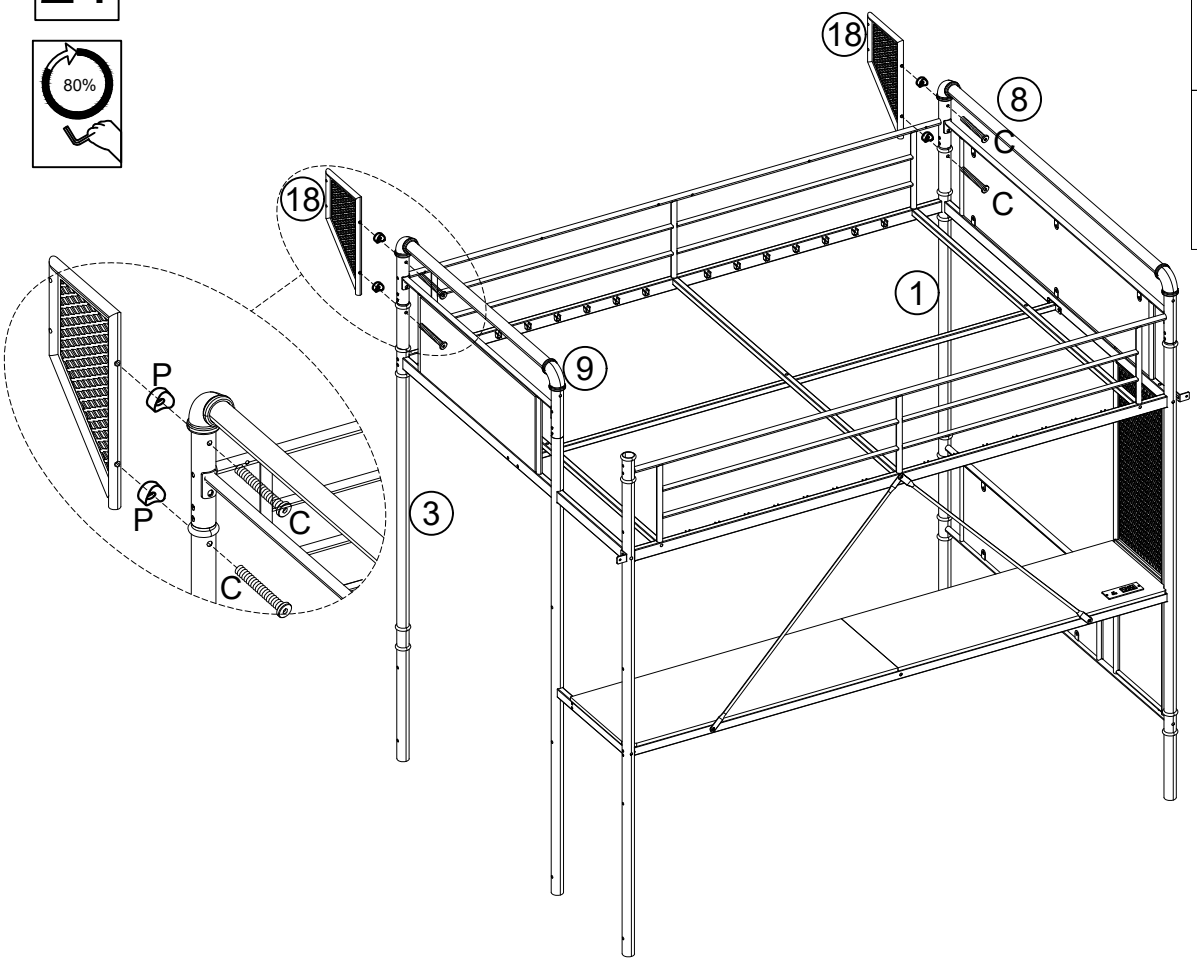

22



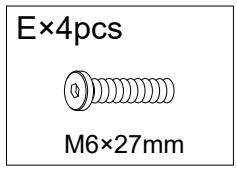

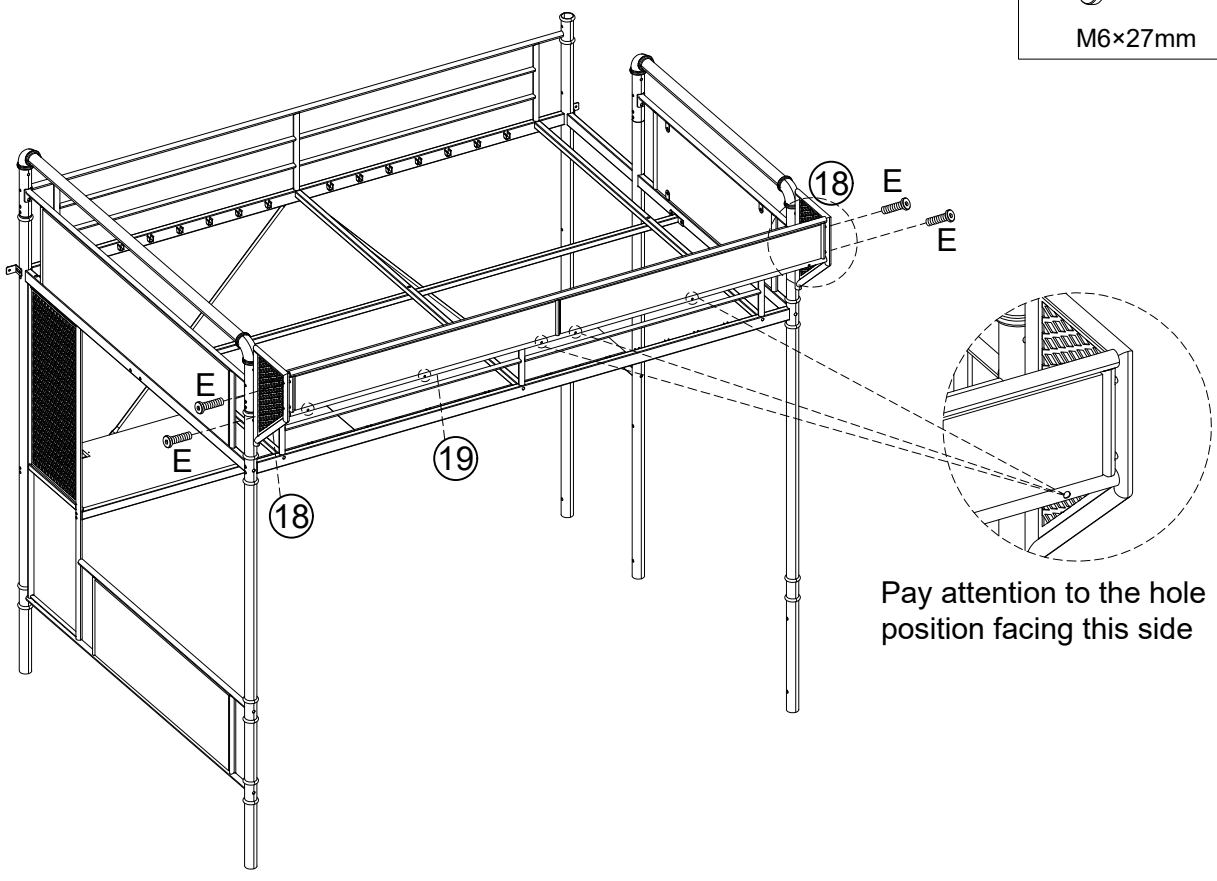

Pay attention to the hole position facing this side

23



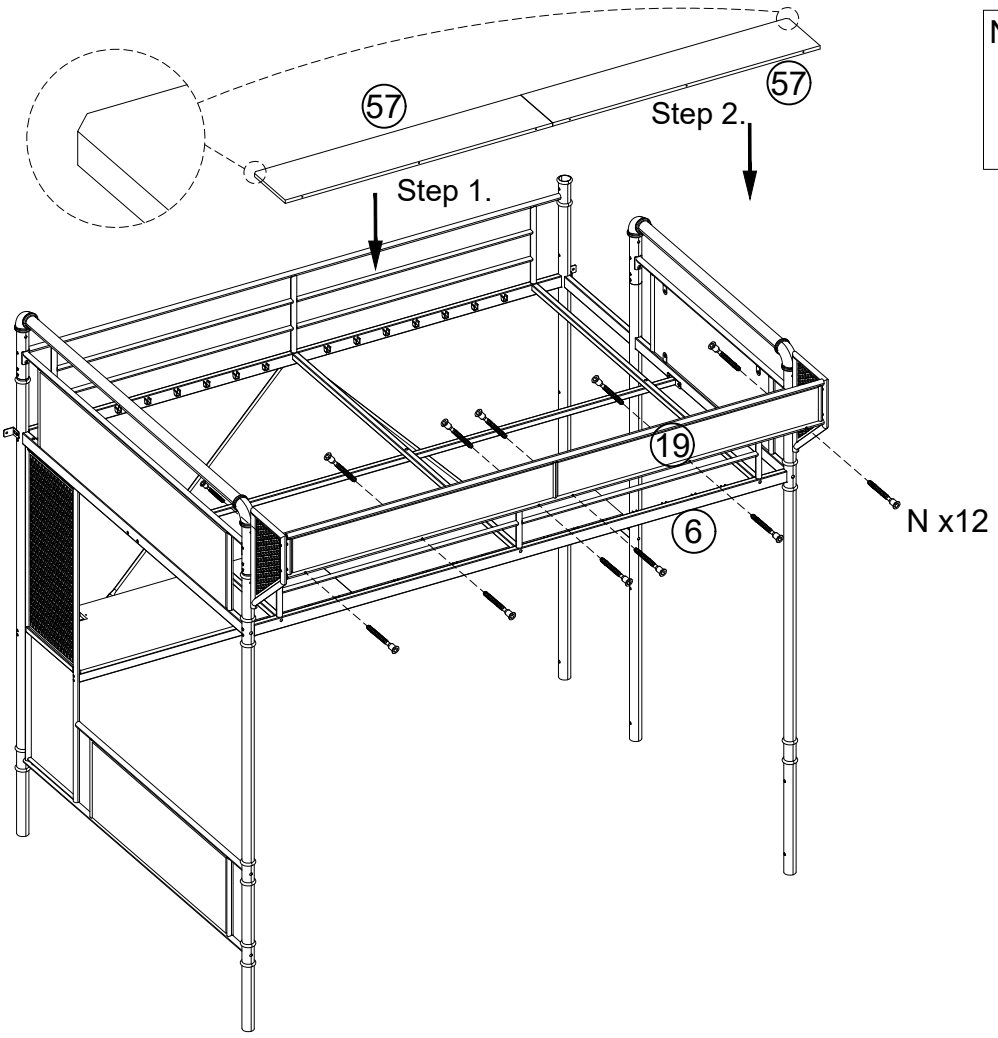

N×12pcs



M5×37mm

24



D×6pcs



M6×38mm

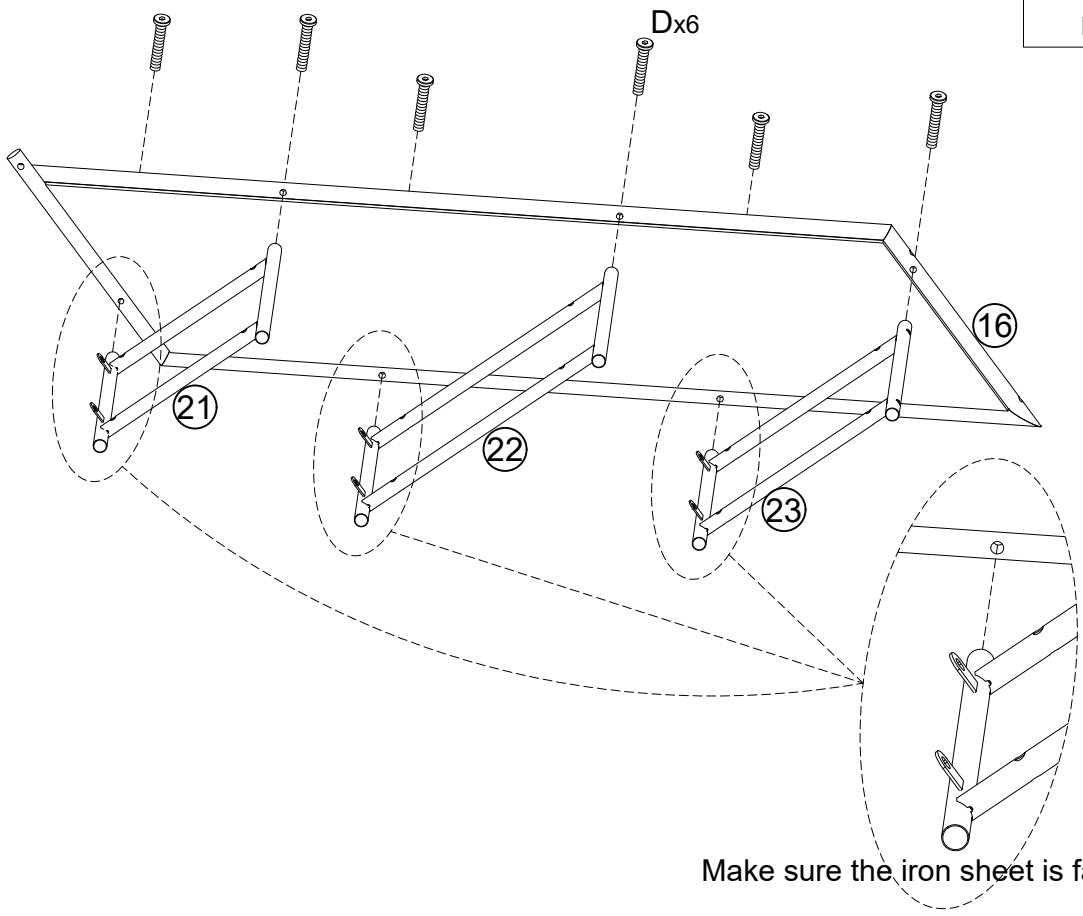

Make sure the iron sheet is facing up

25



D×6pcs



M6×38mm

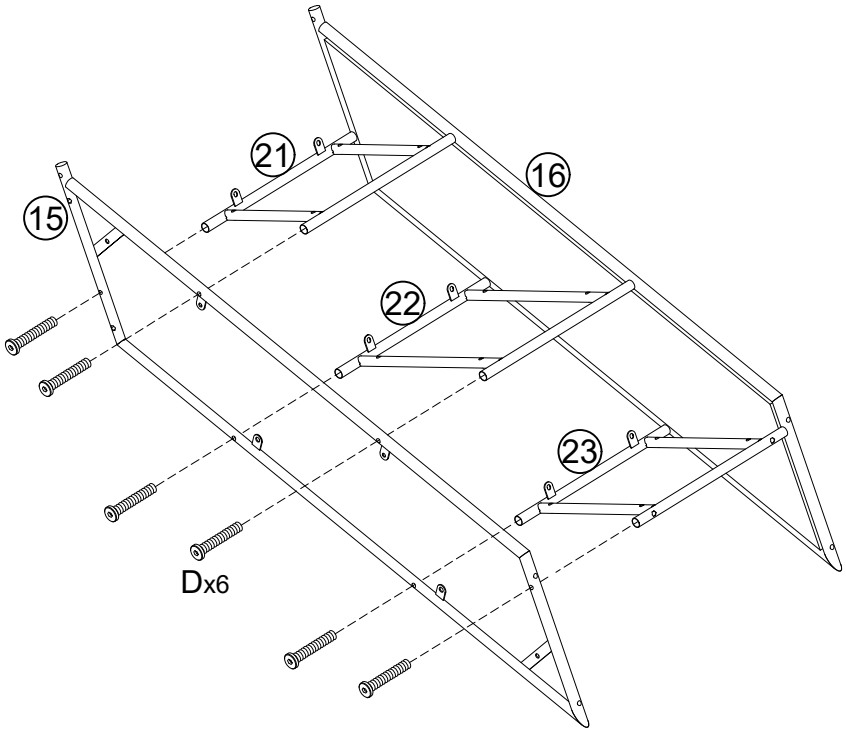

26



E×4pcs

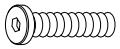

M6×27mm

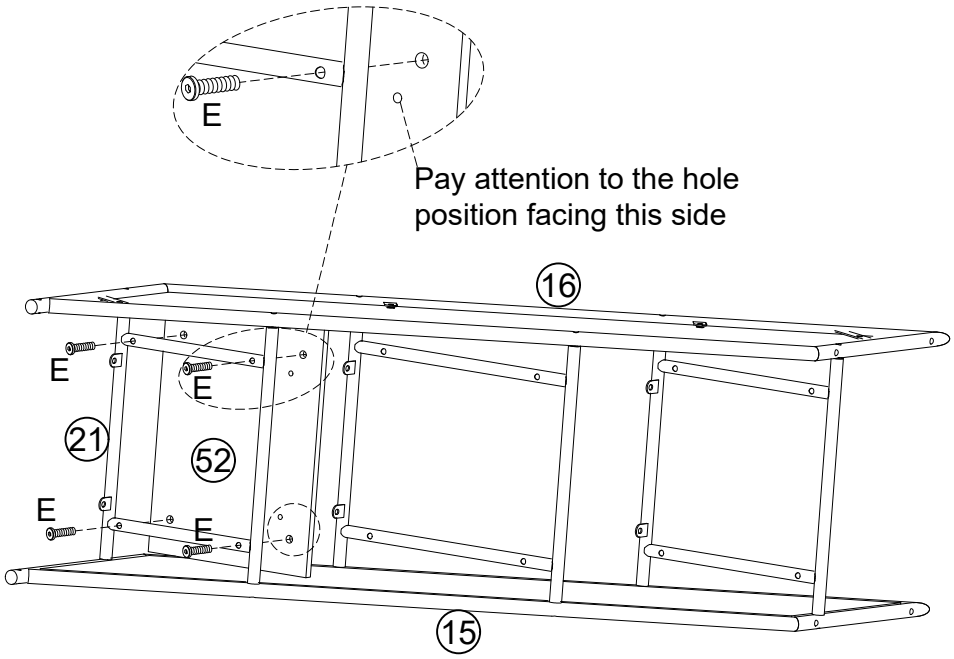

27



E×4pcs



M6×27mm

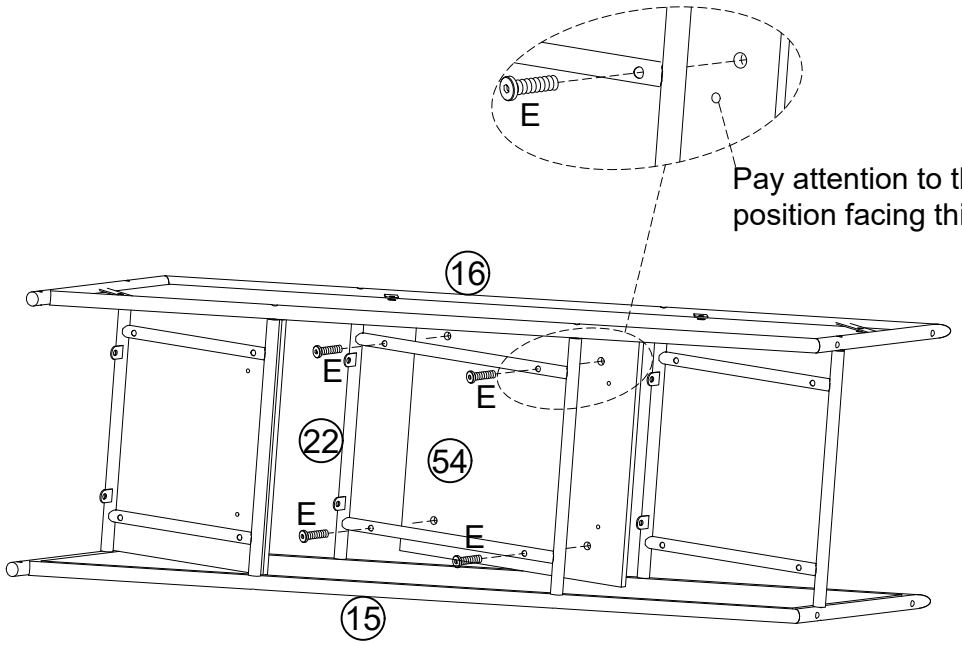

28



E×4pcs

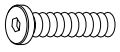

M6×27mm

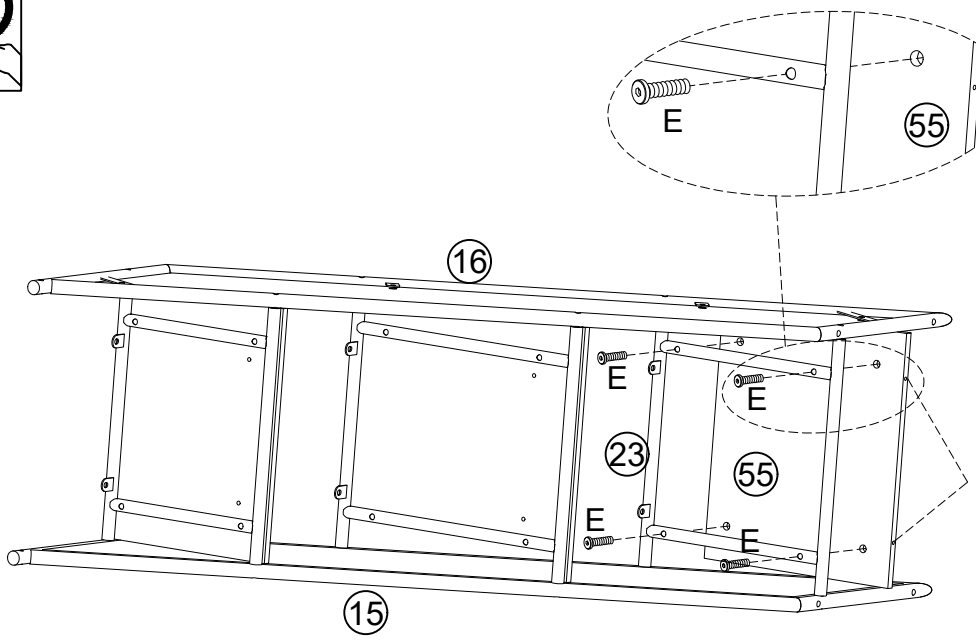

29

100%

G×4pcs



M6×10mm

N×4pcs



M5×37mm

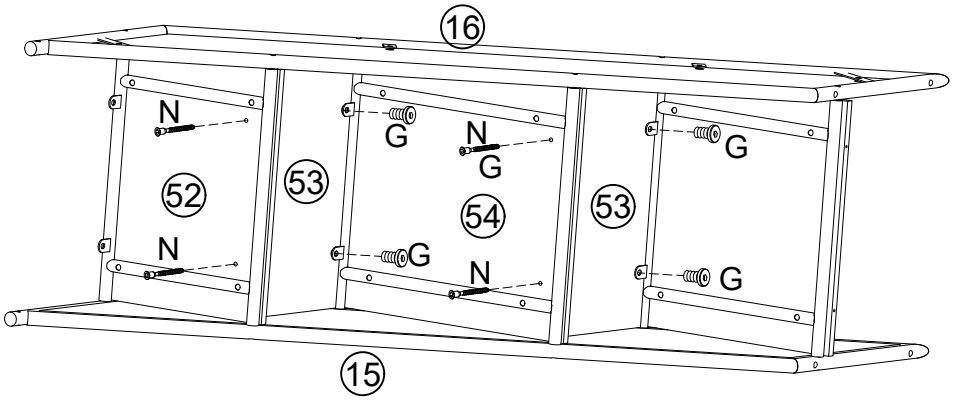

30

100%

G×2pcs



M6×10mm

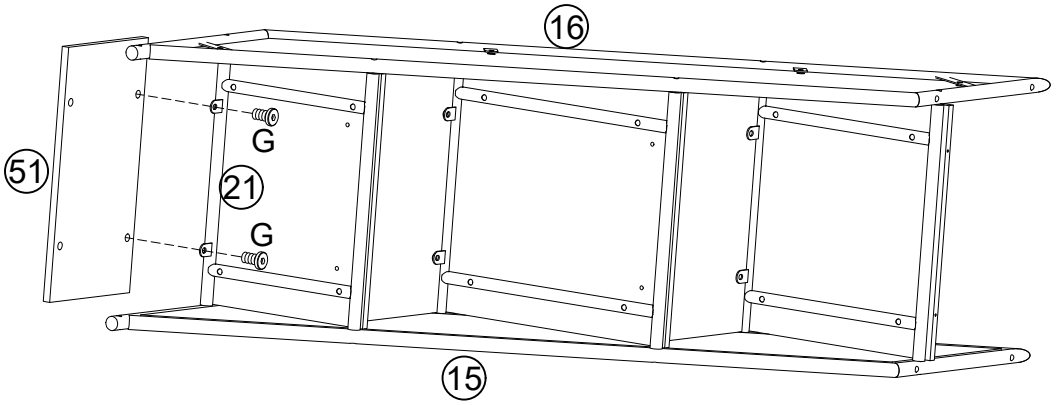

31

100%

D×4pcs



M6×38mm

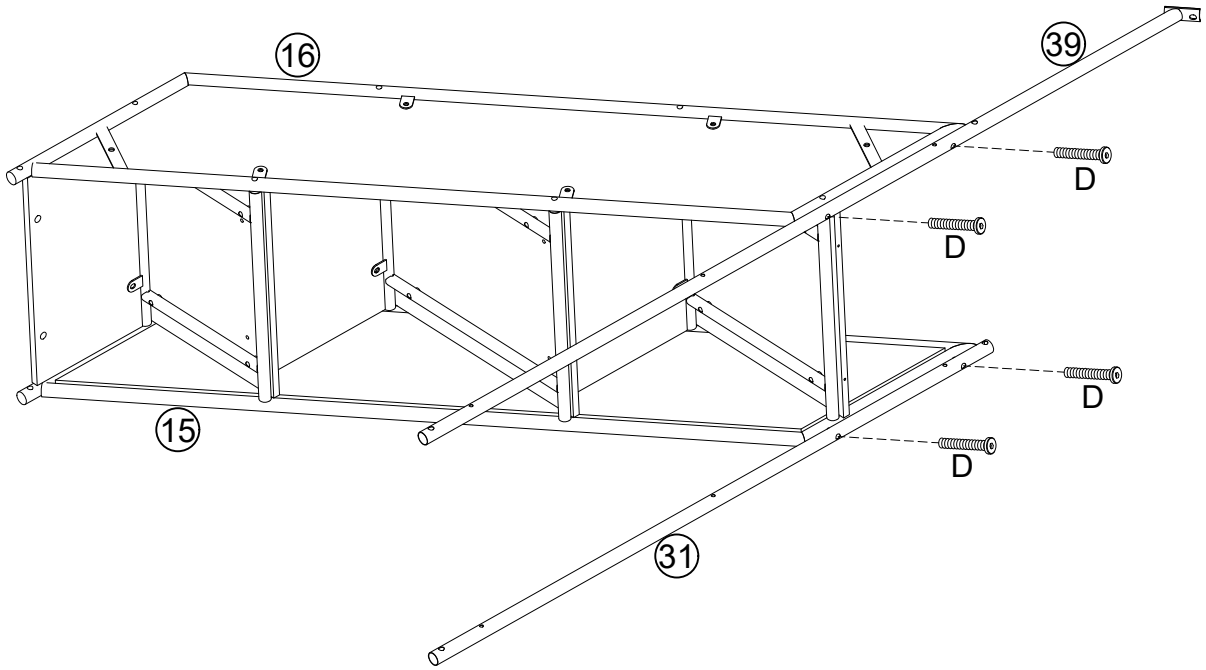

32

100%

D×4pcs



M6×38mm

G×2pcs



M6×10mm

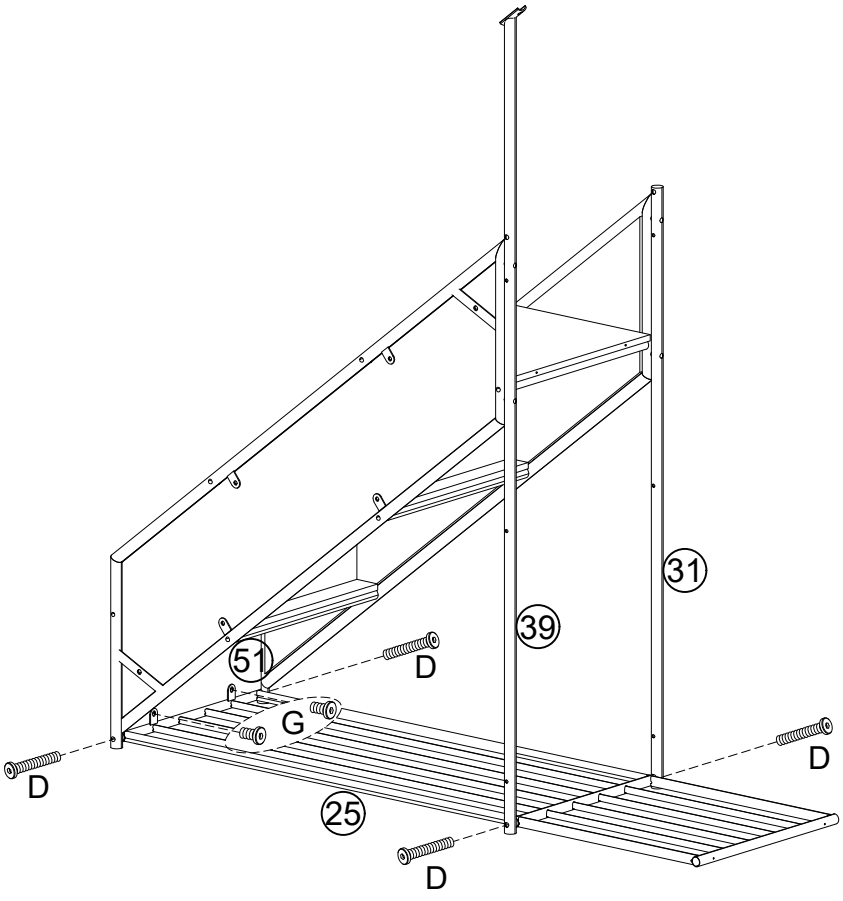

33



N×8pcs



M5×37mm

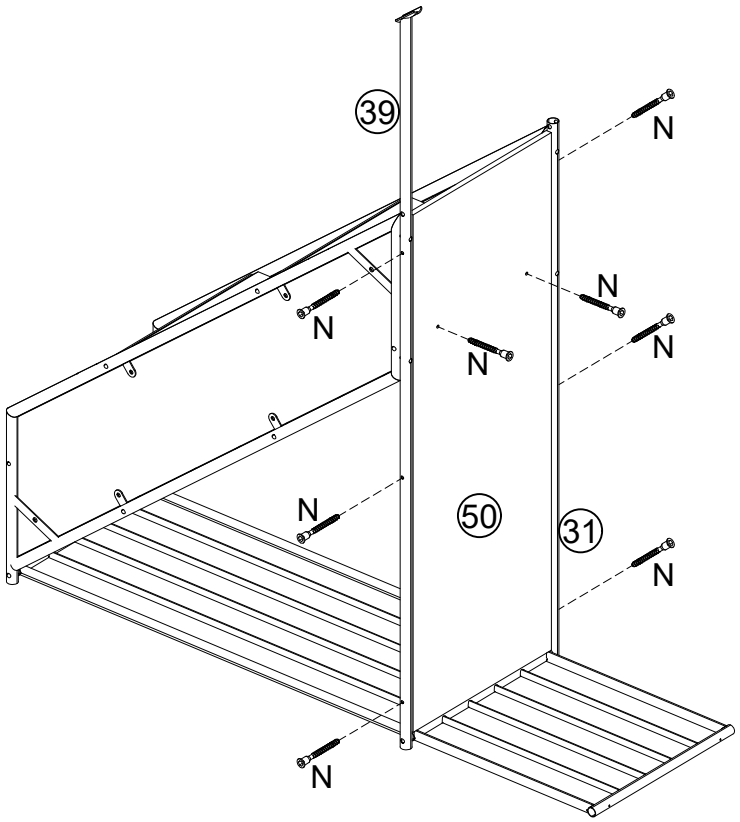

34



D×6pcs



M6×38mm

35



D×2pcs



M6×38mm

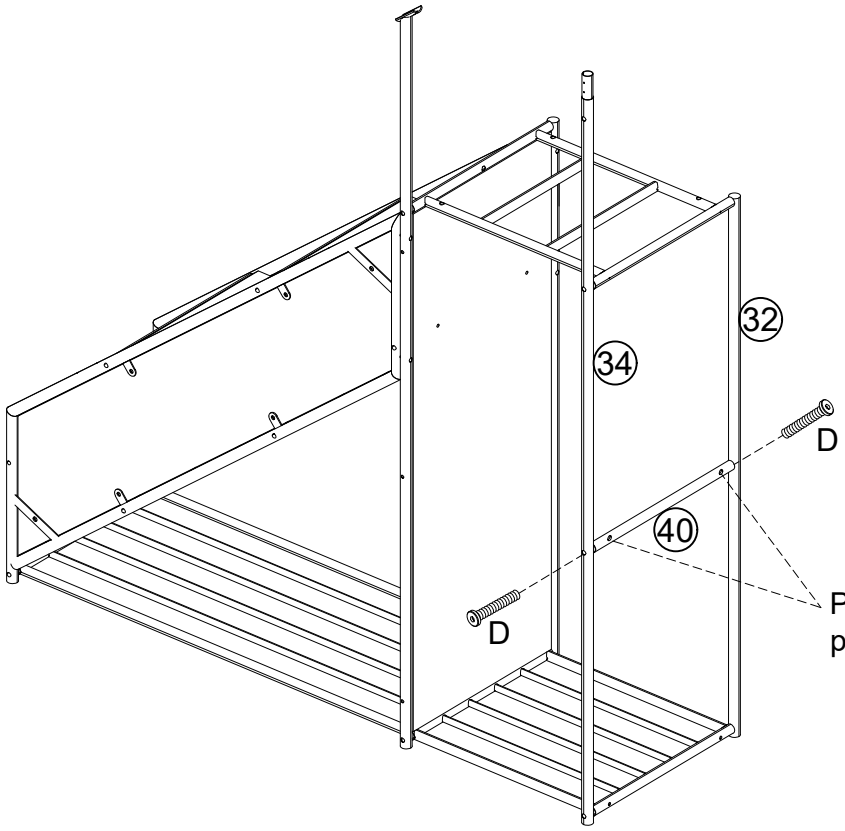

Pay attention to the hole position facing this side

36



G×2pcs



M6×10mm

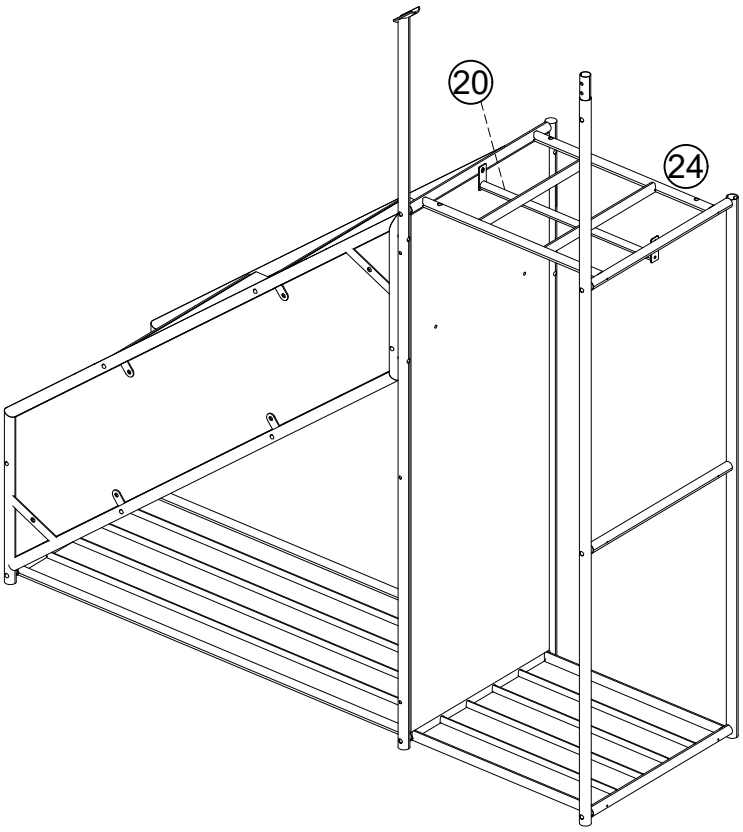

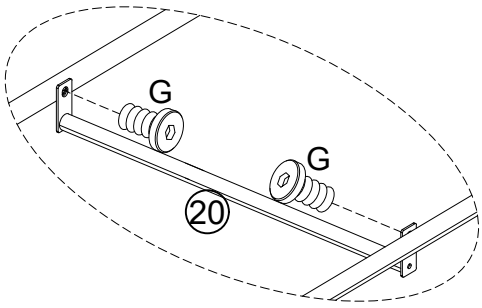

37



E×4pcs



M6×27mm

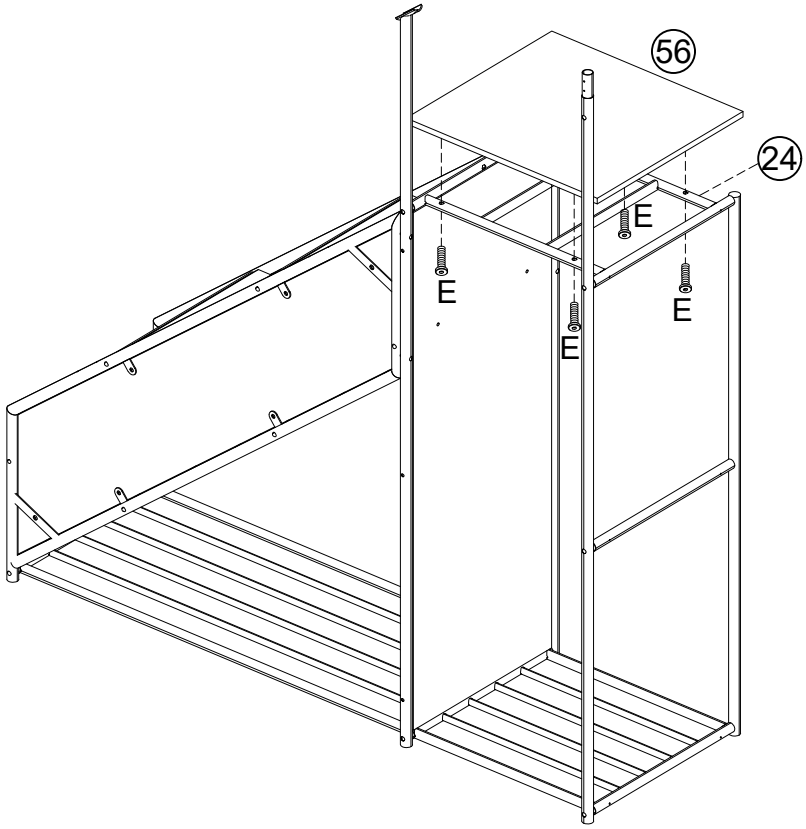

38



F×6pcs



M6×15mm

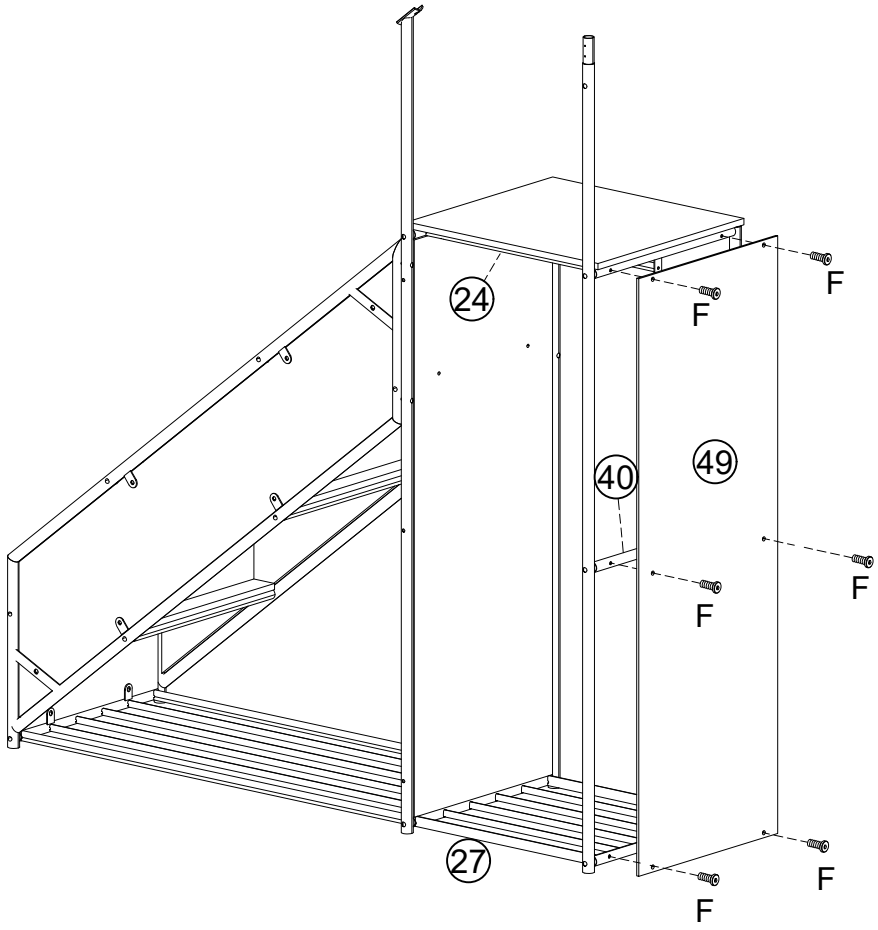

39



G×4pcs



M6×10mm

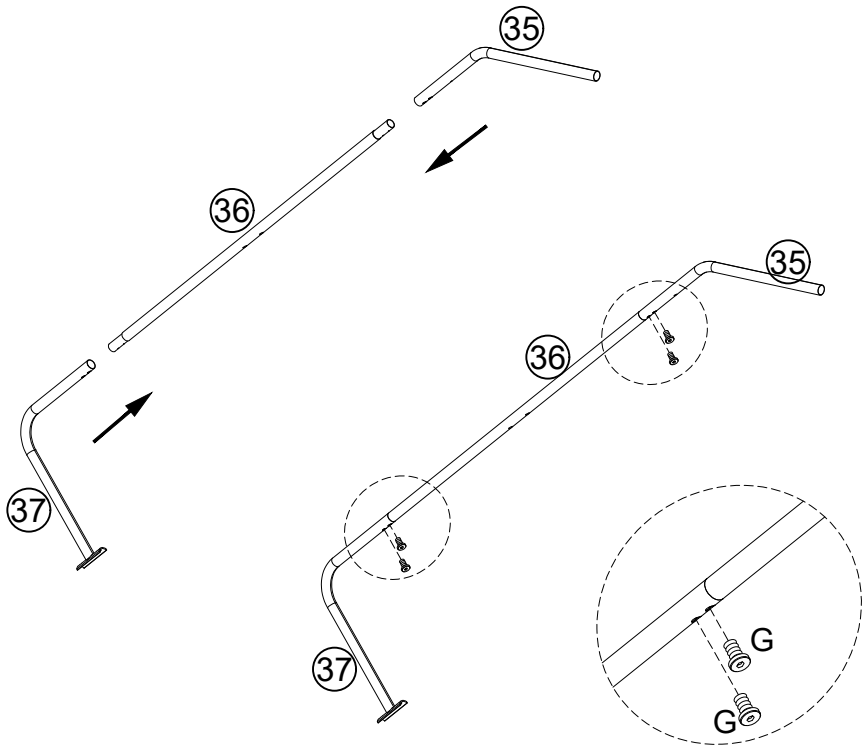

40



G×3pcs



M6×10mm

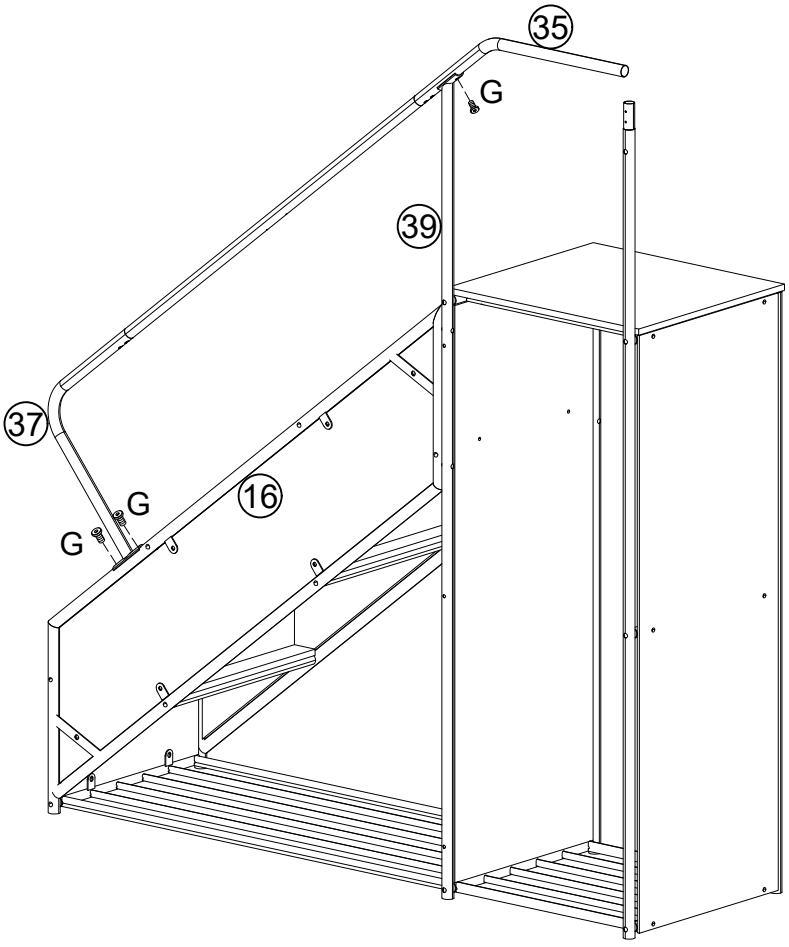

41



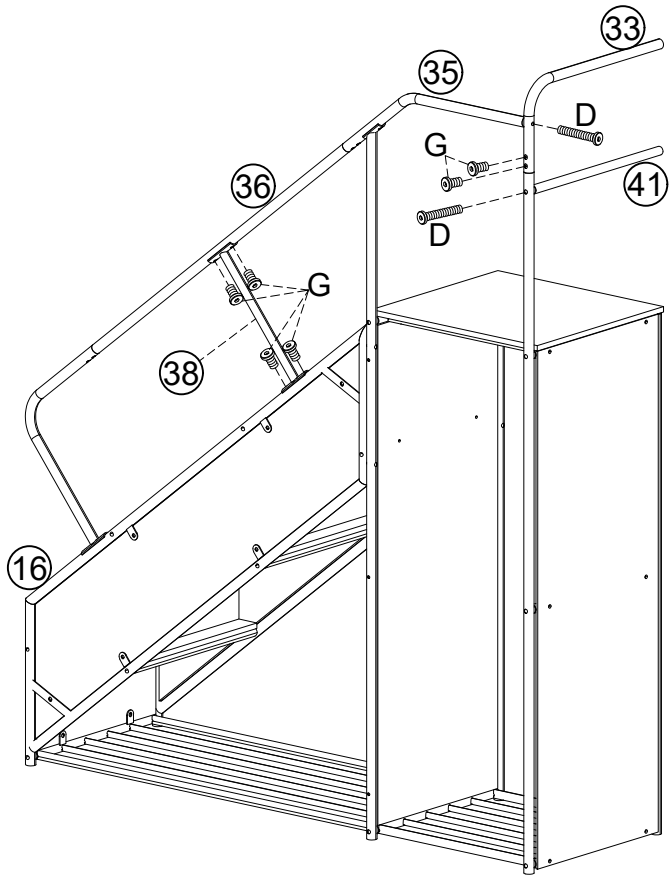

D×2pcs



M6×38mm

G×6pcs



M6×10mm

42



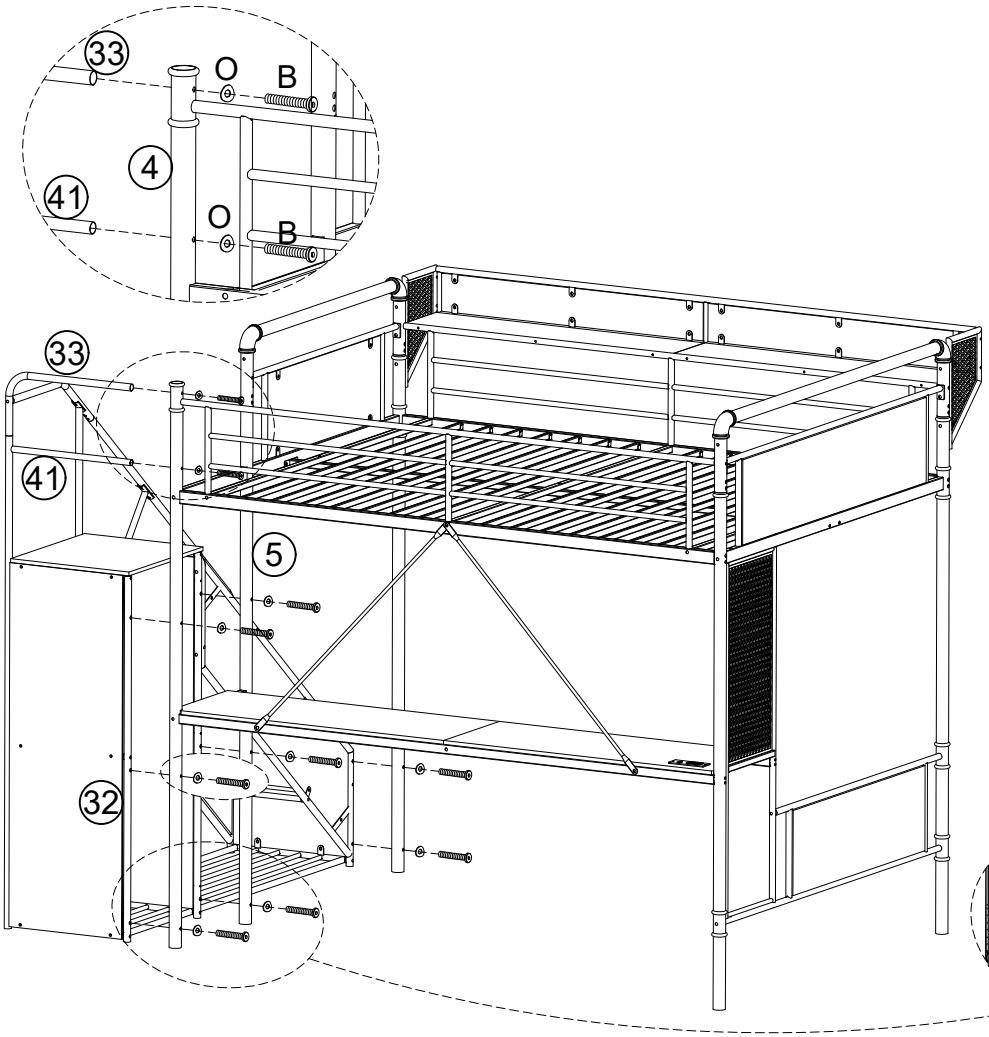

B×10pcs

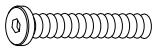

M6×60mm

O×10pcs



Ø18*Ø8.5*1.5T

43



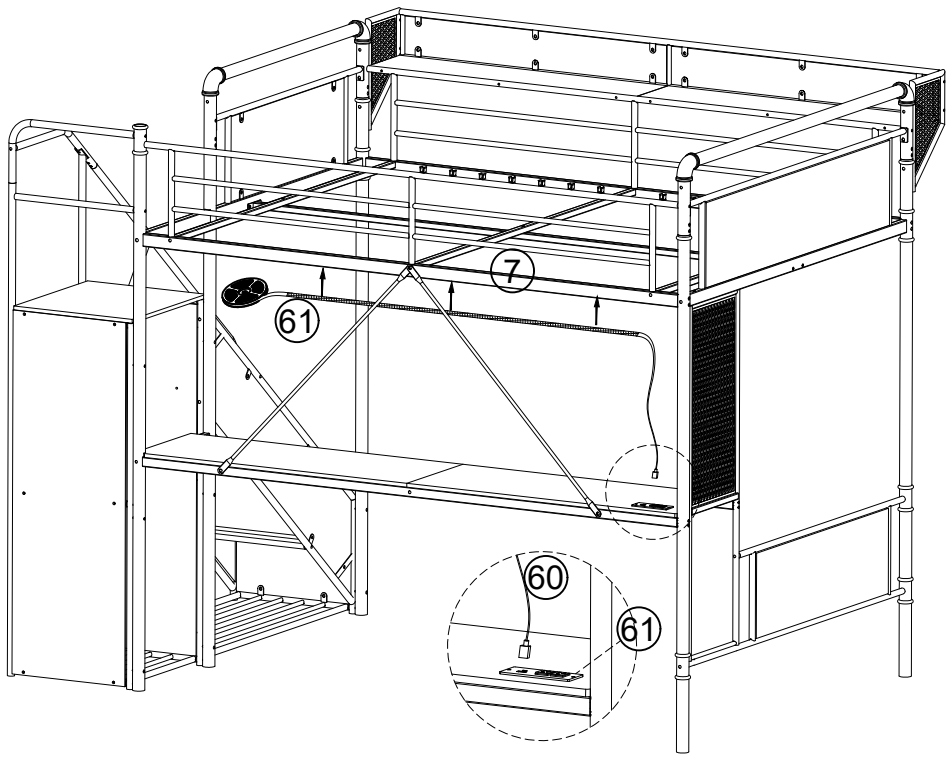

44

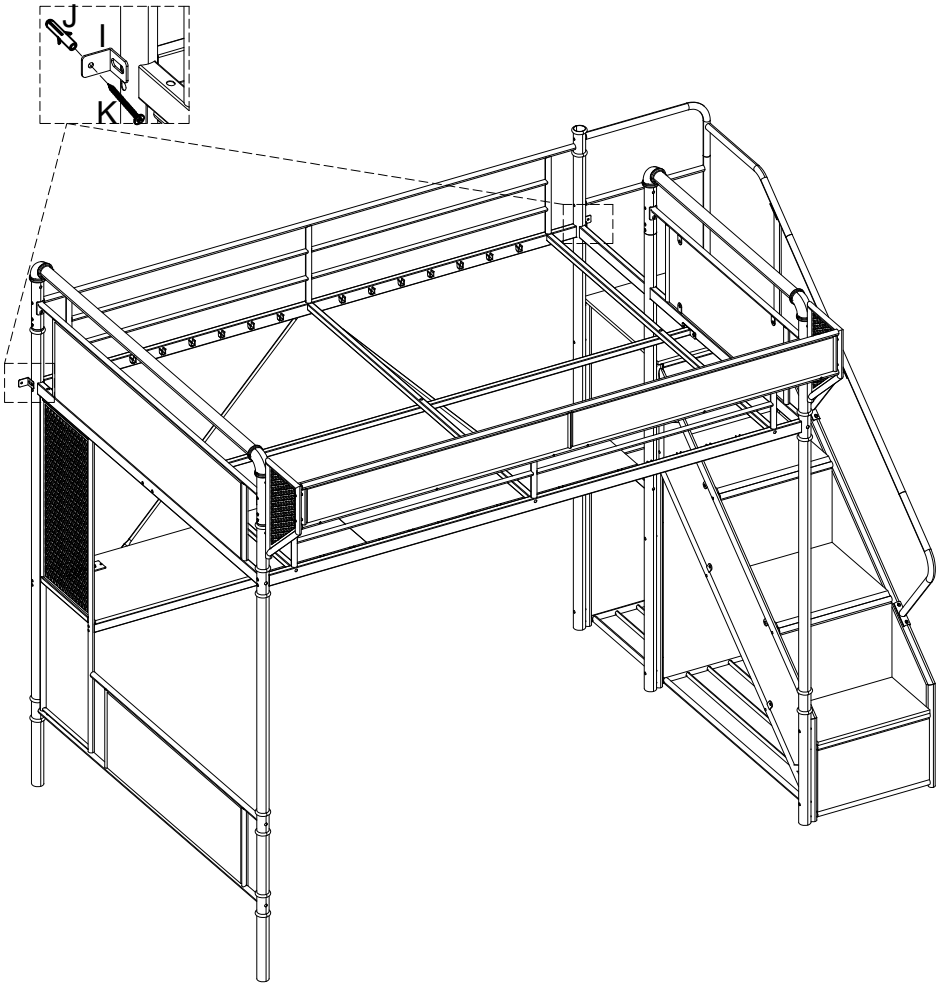

J×2pcs



M8×40mm

K×2pcs



M5×40mm

45



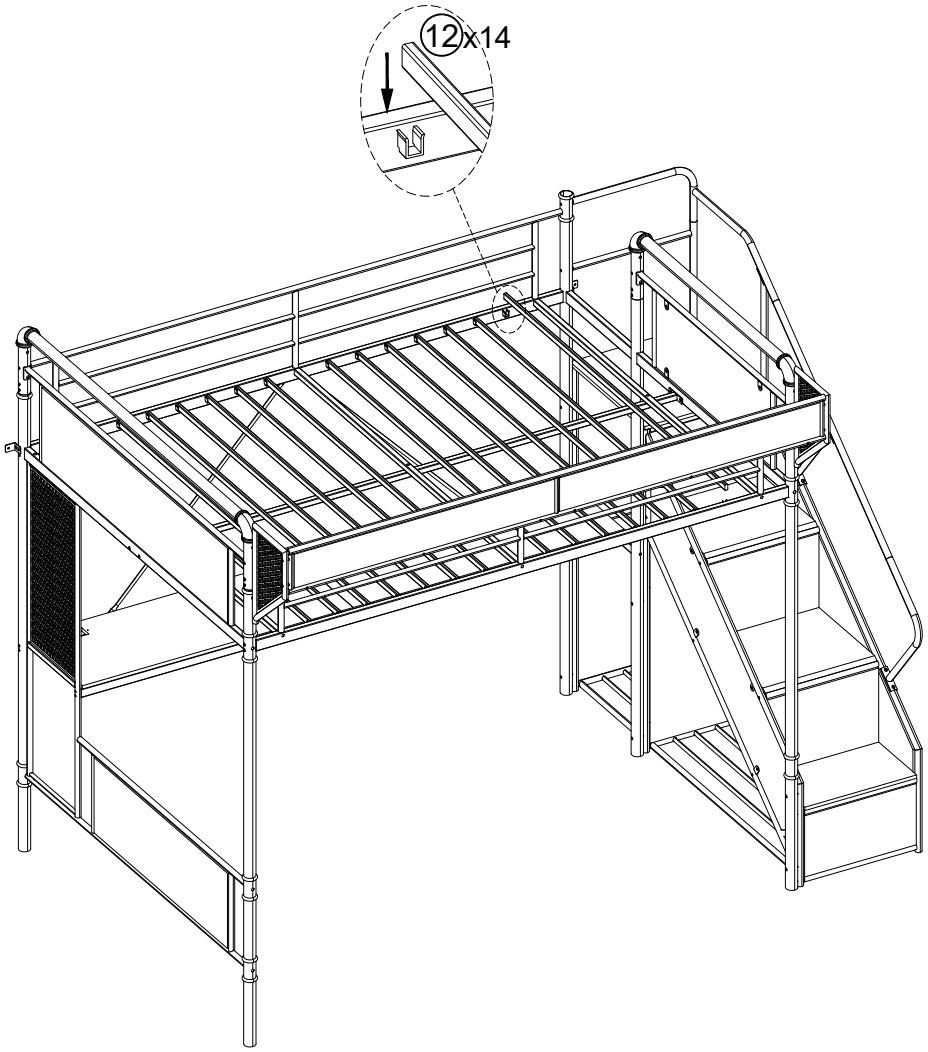

Tighten all screws 100%