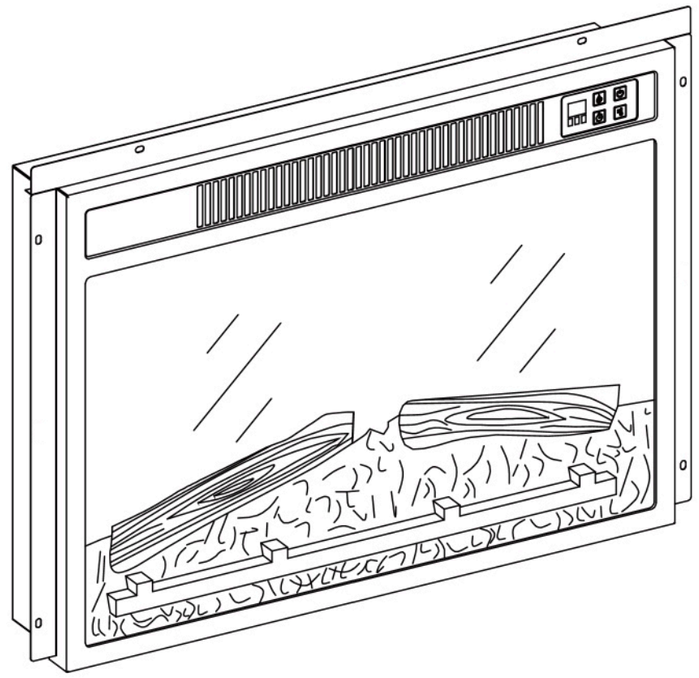

23” Insert Fireplace Heater

TABLE OF CONTENTS

Safety Information ---------- 03
Technical Specification ---------- 04
Package Content ---------- 04
Assembly Instruction ---------- 05
Users Instruction ---------- 07
Control Panel ---------- 08
Remote Control ---------- 10
Care and Maintenance ---------- 11
Trouble Shooting ---------- 11

When using electrical appliances, basic safety precautions should always be followed including the following:

READ ALL INSTRUCTIONS BEFORE USE AND SAVE THESE INSTRUCTIONS

1. Read all instructions before using this heater.

2. Do not use this heater outdoors.

3. This heater is not intended for use in bathrooms, laundry areas and similar indoor locations. Never locate the heater where it may fall into a bathtub or other water container.

4. Do not run the power cord under carpeting. Do not cover the power cord with throw rugs, runners, or the like. Arrange the power cord away from traffic areas and where it will not be tripped over.

5. To disconnect the heater, turn controls to off, then remove the plug from the outlet.

6. Connect to properly grounded outlet only. Always plug heaters directly into a wall outlet/receptacle. Never use with an extension cord or reloadable power tap (outlet/power strip).

7. To prevent a possible fire, do not block operate the firebox on soft surfaces, like a bed, where openings may become blocked.

8. There is a thermostat limiter inside the heater. When the inner temperature overheat or abnormal heating occurs, the thermostat protective device cuts off the power supply to avoid fireplace from damaged or risk of fire.

9. Use the heater only as described in the manual. Any other use not recommended by the manufacturer may cause fire, electrical shock, or injury to persons.

10. ⚠**WARNING** : Manufacturer and seller expressly disclaim any and all liability for personal injury, property damage or loss, whether direct, indirect, or incidental, resulting from the incorrect attachment, improper use,inadequate maintenance, unapproved modification, or neglect of this product.

⚠ **WARNING:** There is no user serviceable parts inside fireplace/heater. If the unit appears to malfunction, turn the unit off and unplug from the wall immediately and contact Customer Service.

⚠ **WARNING:** This heater is hot when in use. To avoid burns, do not let bare skin touch hot surfaces. If provided, use handles when moving thos heater. Keep combustible material, such as furniture, pillows, bedding, papers, clothes, and curtains at least 3ft (0.9m) from the front of the heater and keep them away from the side or rear.

⚠ **WARNING:** Extreme caution is necessary when any heater is used by or near children or invalids and whenever the heater is left operating and unattended.

⚠ **WARNING:** Always unplug the heater when not in use.

⚠ **WARNING:** Do not operate any heater with a damaged cord or plug or after the heater malfunctions, has been dropped, or damaged in any manner. Return the heater to an authorized service facility for examination, electrical or mechanical adjustment, or repair.

⚠ **WARNING:** Do not insert or allow foreign objects to enter any ventiliation or exhaust openings as this may cause an electric shock or fire, or damage to the heater.

⚠ **WARNING:** A heater has hot and arching or sparking parts inside. Do not use in areas where gasoline, paint, or flammable liquids are used or stored.

⚠ **CAUTION: While the heater is in use, the top center of the fireplace can get hot to the touch, and may cause serious injury or burns. Always supervise small children around the fireplace/heater. Do not place any cloth or decorations over the heater outlet or fireplace, or otherwise obstruct the heater outlet of the fireplace, as this may cause a fire and serious injury.**

TECHNICAL SPECIFICATION

Model Number	JC-2301EB
Dimensions (W x D x H)	23” x 5.15” x 17.1”
Net Weight	17.8 lb
Gross Weight	21.5 lb
Power Rating	1400 W
Voltage	120 V
Frequency	60 Hz

PACKAGE CONTENT

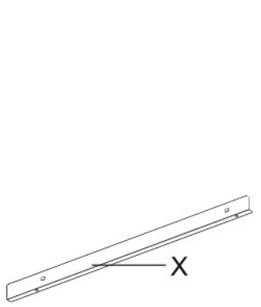

Top Trim

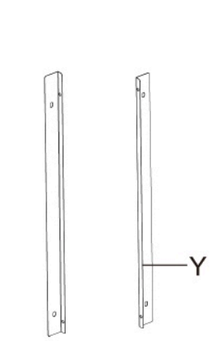

Side Trim (L/R)

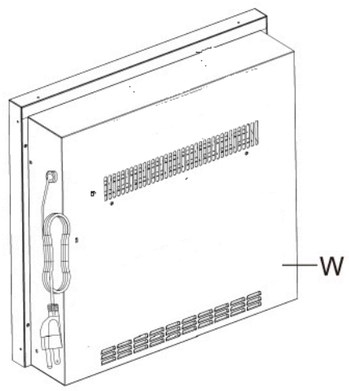

Fireplace Unit

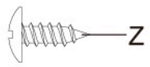

Screw x12



Remote Control

ASSEMBLY INSTRUCTION

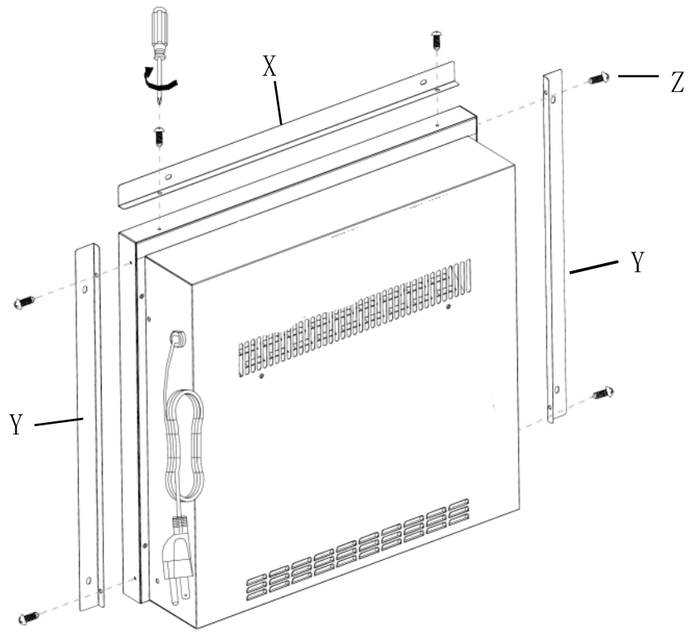

STEP 1

Take out the unit from the box and layout all the spare parts for easy assembly. Make sure all small items are not left in packaging materials.

⚠ CAUTION

- This unit has a glass front panel. Use extreme caution when handling glass to prevent personal injury or damage.

STEP 2

Attach the top trim to the top of the unit and secure it by tightening 2 screws. Make sure the right angle side faces toward the front of the unit.

Align and attach two side trims to the sides of the fireplace unit. Identify the right and the left and make sure the right angle side is faces toward the front of the unit.

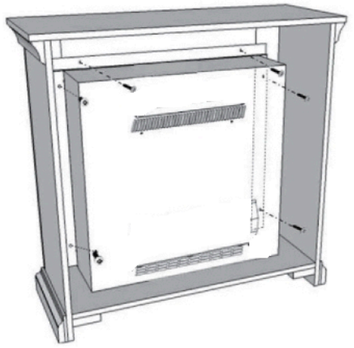

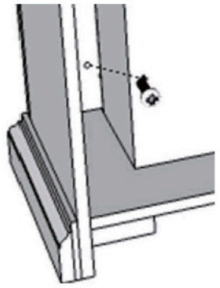

STEP 3

Carefully set the unit from the back of the mantel and center it in the opening.
Check the alignment and attach the unit to the mantel by inserting screws through the drilled holes on the trim to the mantel.
NOTE: Do not attempt to install the unit from the front of the mantel. It will not fit.

USER INSTRUCTION

Before use

Check that the air intake and exhaust is not covered or obstructed in anyway.

Keep combustible objects at least 3ft away from the unit.

Plug the unit to a grounded power socket.

Grounding

This product must be grounded. If it should malfunction or breakdown, grounding provides a path of least resistance for electric current to reduce the risk of electric shock.

This unit comes standard with a 6ft (1.8m) long, three wired cord. Always plug the unit into a wall outlet. An extension or relocate tab should never be used.

⚠ CAUTION / WARNING

- Improper connection of the equipment grounding conductor can result in a risk of electric shock. Check with a qualified electrician or serviceman if you are in doubt as to whether the product is properly grounded.
- DO NOT modify the plug provided with the product nor using any bypass device if the plug does not fit the outlet. Have a proper outlet installed by a qualified electrician.

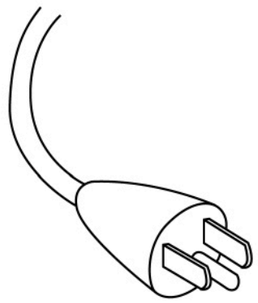

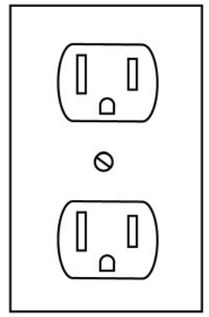

USER INSTRUCTION (CONTROL PANEL)

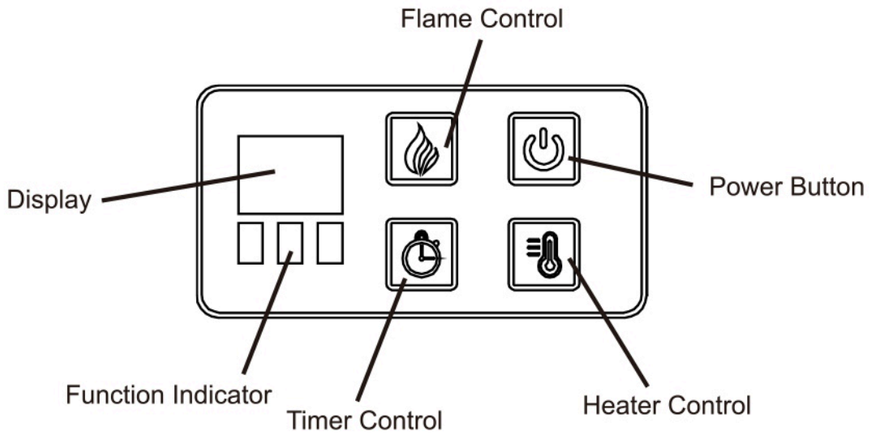

Control Panel

The control panel is located on the top right corner of the unit.

Power ON / OFF
Press the power button to turn on the unit. Press again to turn off the unit.
NOTE: There is a thermostat limiter inside the unit. When the inner temperature is too hot, the unit will automatically turned off to avoid damage to the product or risk of fire.

⚠ CAUTION / WARNING

- DO NOT unplug the unit when it is still “ON”

Flame Control
Press the flame control button to rotate and set flame effect levels. The flame setting are as follows

Button Press	Flame Level	Display Value	Fireplace Appearance
1st Press	High	L3	Highest flame, logs glow
2nd Press	Medium	L2	Medium flame, logs glow
3rd Press	Low	L1	Low flame, logs glow
4th Press	OFF	None	OFF

NOTE: When the heater is turn on, the flame effect level can only rotate and set between High, Medium, and Low.

Heater Control
Press the heater control to turn on and off the heater.

When the heater is turned on , press and hold the heater control button for 5 seconds to enter temperature adjustment mode . The LED indicator is red . In adjustment mode , the display will flashes . There are 22 levels to change Fahrenheittemperature (ON,62℉-82℉). After this is set, the display will flash 2 times and exit from setting status .

To switch from degree Fahrenheit to degree Celsius , press and hold the power button for 5 seconds when the heater is turned on . LED indicator light does not change color. There are12 levels to change Celsius temperature(ON,17°C-27°C).Repeat the same process to convert Celsius to Fahrenheit.

NOTE : The temperature is shown in Red.

Timer Control
Press the timer button to turn the timer on . The timer function can controls both the flame effect and heater .
The timer can set as the table suggested below

Button Press	TimerInterval	Display
1st press	30 Minutes	30
2nd press	1 Hour	1h
3rd press	2 Hours	2h
4th press	3 Hours	3h
5th press	4 Hours	4h
6th press	5 Hours	5h
7th press	6 Hours	6h
8th press	OFF	None

NOTE: Timer only controls heater if only the heater is on before timer is set.
NOTE: Timer only controls flame effect function if only the flame effect function is on before timer is set.
NOTE: Timer can control both heater end flame effect function if both are on before timer is set

USER INSTRUCTION (REMOTE CONTROL)

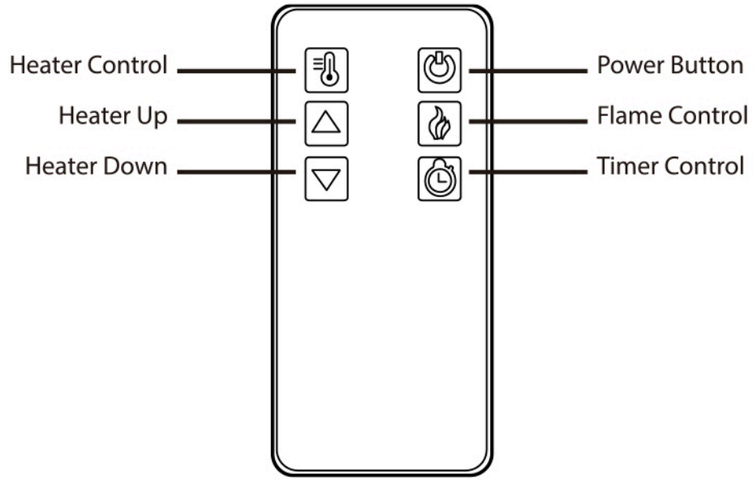

Remote Control

The operation of the remote control buttons work the same as the button on the control panel.
NOTE: The remote control cannot be used to switch between degree Fahrenheit and degree Celsius.

Install / Replace Battery
The remote control is provided with a CR2025 battery. Remove the plastic insulating sheet before using.

To replace or remove old battery, push in the clip and pull the battery bracket out simultaneously.

Insert a new battery with the button side into the battery bracket, make sure the battery is firmly seated.

To replace the bracket, simply push it into the remote control. Make sure the bracket snaps into position.

NOTE: Remove battery from remote control if not use for an extended period of time.

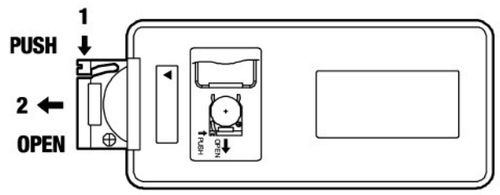

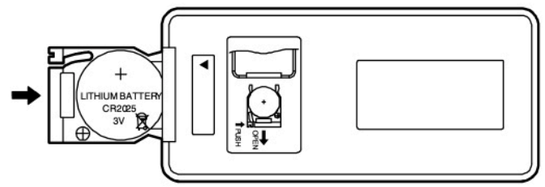

⚠ CAUTION / WARNING

- Dispose old / used battery at a suitable recycling point or according to local regulations.
- DO NOT ingest battery. If accidentally swallowed, seek for medical help immediately.

CARE AND MAINTENANCE

Cleaning the unit:

Always turn off and unplug the unit from power outlet before cleaning.

Allow the unit to cool down completely before performing any maintenance or cleaning.

Use a vacuum cleaner or duster to regularly remove any accumulated dust on the unit

Use a damp soft cloth to clean the surface and buff with a dry cloth.

Do not use abrasive cleansers, liquid sprays or any cleaner that could scratch the surface.

TROUBLE SHOOTING

Problem	Solution
The unit does not turn on	Make sure the unit is plugged into a standard 120V grounded power source. Press the power button on the control panel.
Flame effect is on, but there is no flame effect	Open the top and back panel to check if the flame spindle has fallen off from the spindle motor.
The heater does not blow warm air	Make sure the set temperature is higher than the room temperature.
The heater does not work	Turn all switches to OFF and unplug the unit for 5 minutes. Plug the unit back to power and operate as normal.
Error Code EE shown on the indicator	Please contact customer service.
Remote control does not work	Use it closer to the unit / change battery / remove insulating plastic sheet.