TEAR SHEET

Bexley 19" Table Lamp

Item # RL 3370NB-S



Designer: Ralph Lauren

Height: 18.75"
Width: 16.5"
Base: 7.25" Round
Finishes: NB, PN
Shade Treatments: S
Socket: E26 Keyless w/ Dimmer on Base
Wattage: 15 LED A19
Weight: 14 Pounds
Note: 120V Configuration Only

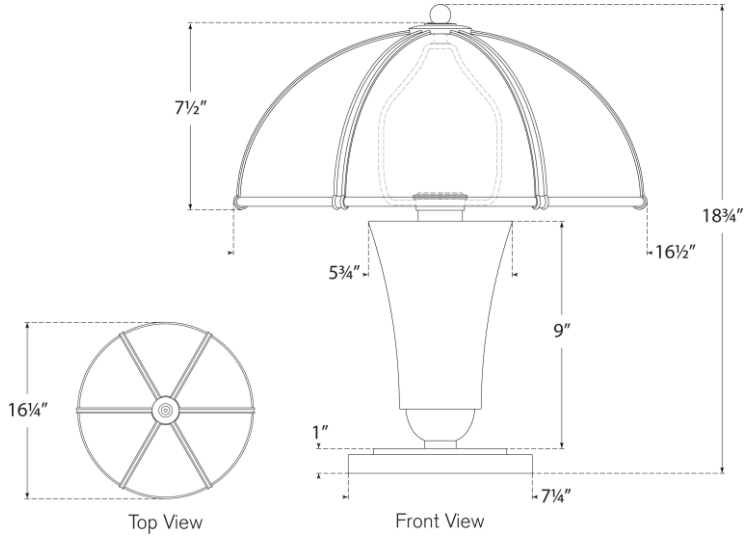

VISUAL COMFORT & CO.