# Assembly Guide

Keep manual for future reference.

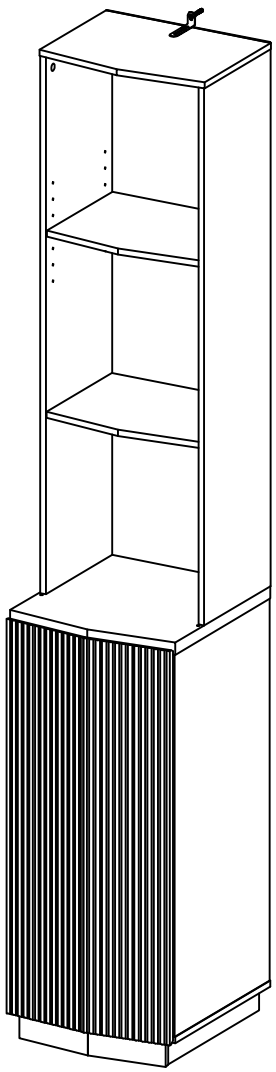

NB-DA010~DA012

Have an assembly question or need a replacement part?
Please contact MorganBrig.Service@gmail.com, we are here to help.

# Inform

## Assembly Instructions

Before beginning the assembly process, please read and save these instruc- tions for reference.Following these guidelines will ensure a smooth and successful assembly of your product secure the components without excessive tightening.

**1.Part Identification:**
Carefully separate and identify all the parts included in your package. Confirm that you have all the components listed in the instruction manual. This step will help you avoid any missing or misplaced parts during assembly.

**2.Work Surface:**
To prevent any scratches or damage to the product, assemble it on a soft mat or a similar protective surface. This will provide a cushioned area for the components and protect the surfaces from unwanted marks.

**3.Step-by-Step Assembly:**
Follow the assembly instructions provided, proceeding one step at a time. Take care to understand each step properly before proceeding to the next one.This sequential approach ensures that the assembly is done correctly and minimizes the chance of errors.

**4.Proper Screw Seating:**
all screws are correctly seated. By partially tightening each screw and nut initially, you can ensure that they are aligned properly and fit securely before final tightening.

**5.Avoid Over-Tightening:**
While each screw and nut should be tightened correctly, it is crucial not to over-tighten them. Over-tightening can cause damage to the product or compromise its structural integrity. Use the appropriate amount of force to secure the components without excessive tightening.

---

## customer help center:

If you encounter any questions or problems during the assembly process,please do not hesitate to contact us.
We strive to provide excellent customer support and will respond to your inquiries within 24 hours.Our team will offer you a suitable solution to address any concerns you may have.

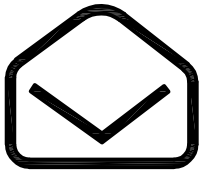

MorganBrig.Service@gmail.com

# Get to know your Boards

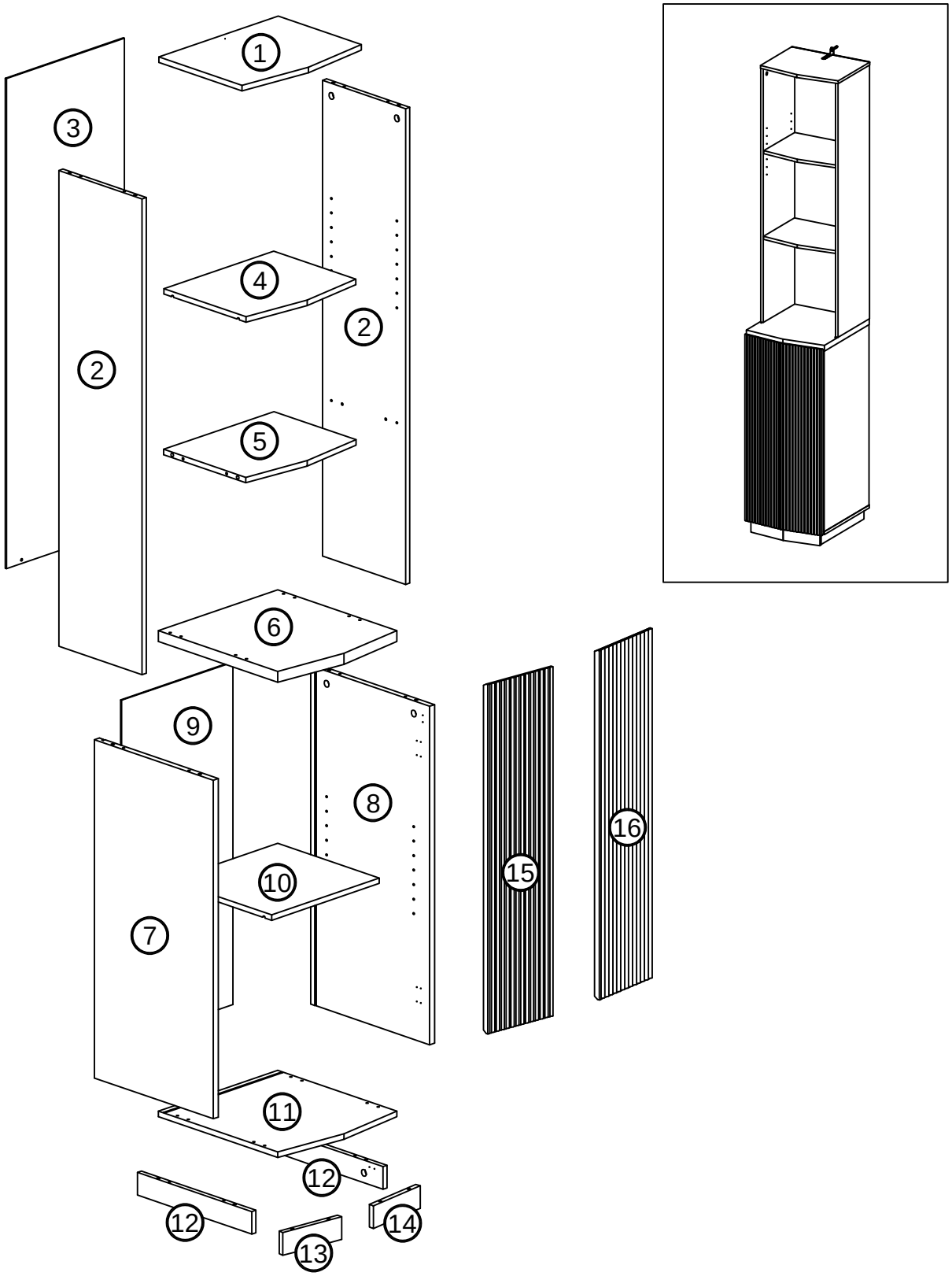


Have an assembly question or need a replacement part?
Please contact MorganBrig.Service@gmail.com, we are here to help.

# Parts List

1 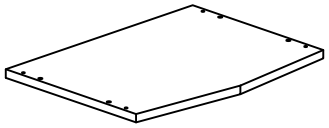 [ 1 ]

2 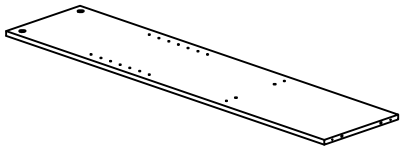 [ 2 ]

3 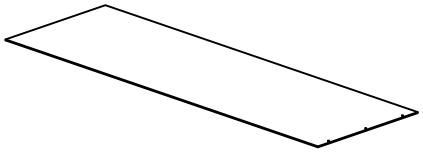 [ 1 ]

4 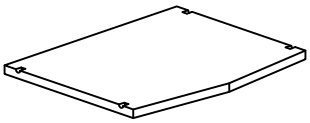 [ 1 ]

5 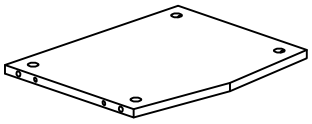 [ 1 ]

6 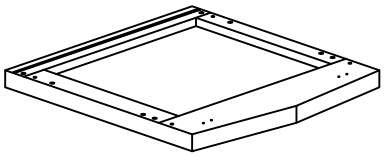 [ 1 ]

7 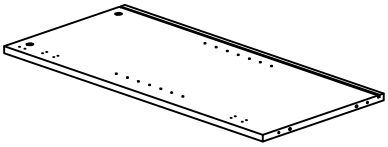 [ 1 ]

8 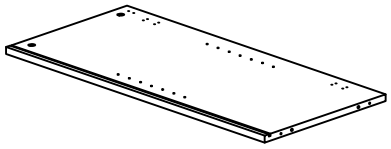 [ 1 ]

9 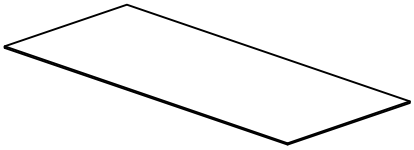 [ 1 ]

10 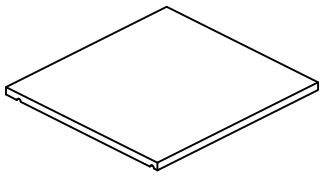 [ 1 ]

Have an assembly question or need a replacement part?
Please contact MorganBrig.Service@gmail.com, we are here to help.

# Parts List

11 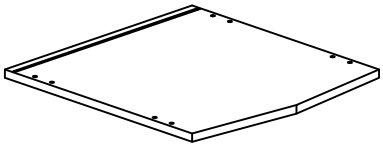 [ 1 ]

12 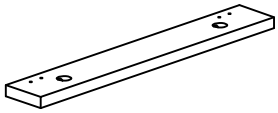 [ 2 ]

13 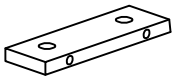 [ 1 ]

14 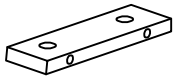 [ 1 ]

15 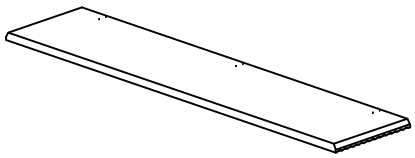 [ 1 ]

16 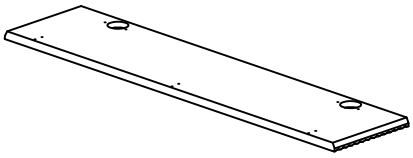 [ 1 ]

Have an assembly question or need a replacement part?
Please contact MorganBrig.Service@gmail.com, we are here to help.

# Fasteners

## Fasteners are shown actual size 1:1

Ⓐ 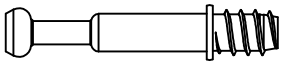 [ 20 ]

KD Bolt
M6x35mm

Ⓑ 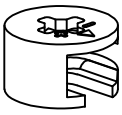 [ 20 ]

KD Cam
Ø15x9.5mm

Ⓒ  [ 24 ]

Wood Dowel
6 x 30mm

Ⓓ  [ 8 ]

Ø5.0x48mm

Ⓔ 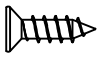 [ 36 ]

ST3.5x12mm

Ⓕ 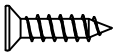 [ 12 ]

ST3.5x14mm

Ⓞ 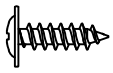 [ 3 ]

ST3.5x12mm

Ⓖ 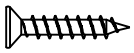 [ 10 ]

ST3.0x16mm

Have an assembly question or need a replacement part?
Please contact MorganBrig.Service@gmail.com, we are here to help.

# Get to know your Hardware

Ⓗ 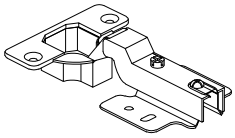 [ 2 ]

Half overlay Hinge

Ⓘ 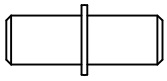 [ 10 ]

Shelf Pin

Ⓙ 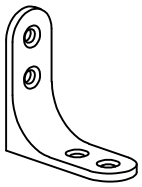 [ 2 ]

L Bracket

Ⓚ 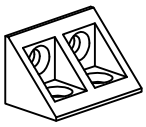 [ 4 ]

Plastic Triangle Bracket

Ⓛ 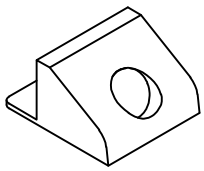 [ 10 ]

Back Clip

Ⓜ 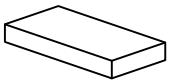 [ 5 ]

EVA Pads

Ⓠ 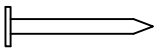 [ 13 ]

Nail

Ⓡ 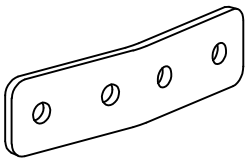 [ 3 ]

V Bracket

Have an assembly question or need a replacement part?
Please contact MorganBrig.Service@gmail.com, we are here to help.

# Get to know your Hardware

## TIP OVER RESTRAINT HARDWARE

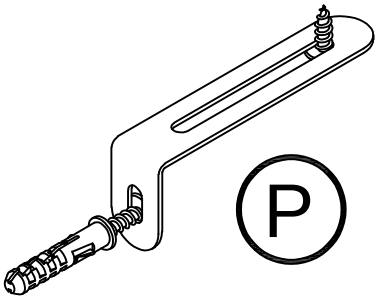

P

P1 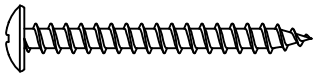 [ 1 ]

ST4.0x38mm

P2 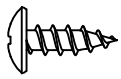 [ 1 ]

ST4.0x12mm

P3  [ 1 ]

Ø5.0x30mm

P4 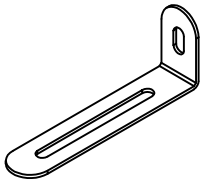 [ 1 ]

75*25*25*1mm

Have an assembly question or need a replacement part?
Please contact MorganBrig.Service@gmail.com, we are here to help.

# STEP 1

Ⓐ 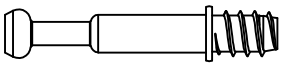 [ 4 ]

KD Bolt
M6x35mm

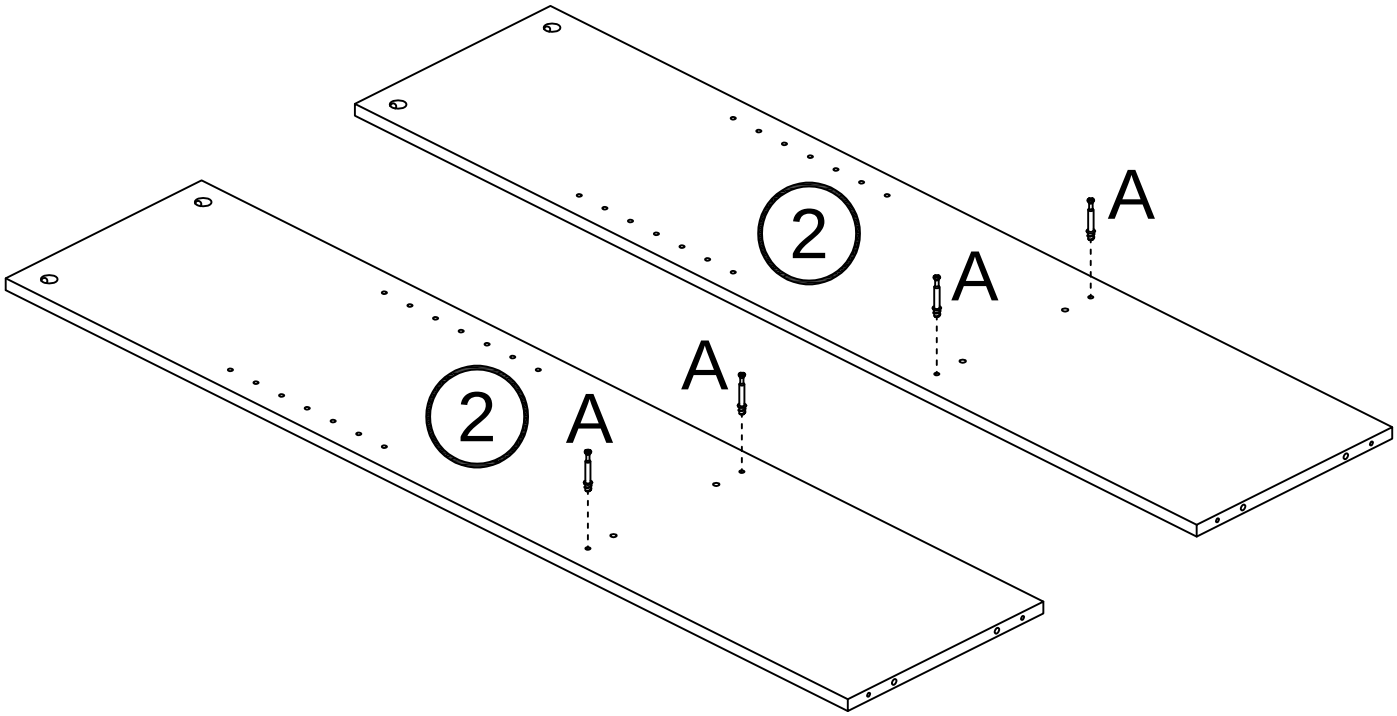


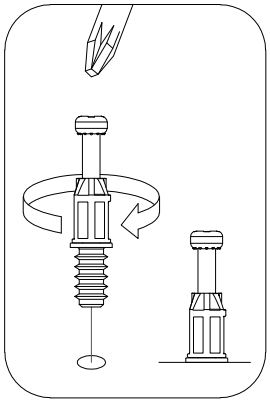

# STEP 2

Ⓑ 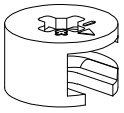 [ 4 ]

KD Cam
Ø15x9.5mm

Ⓒ  [ 4 ]

Wood Dowel
6 x 30mm

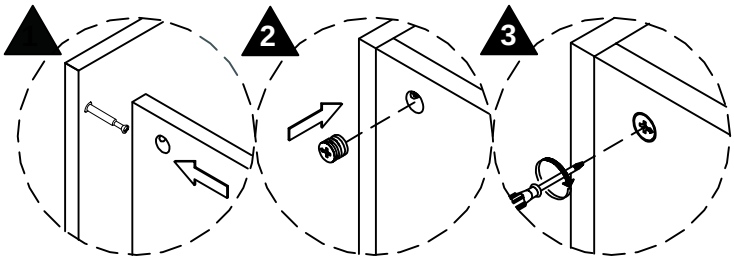


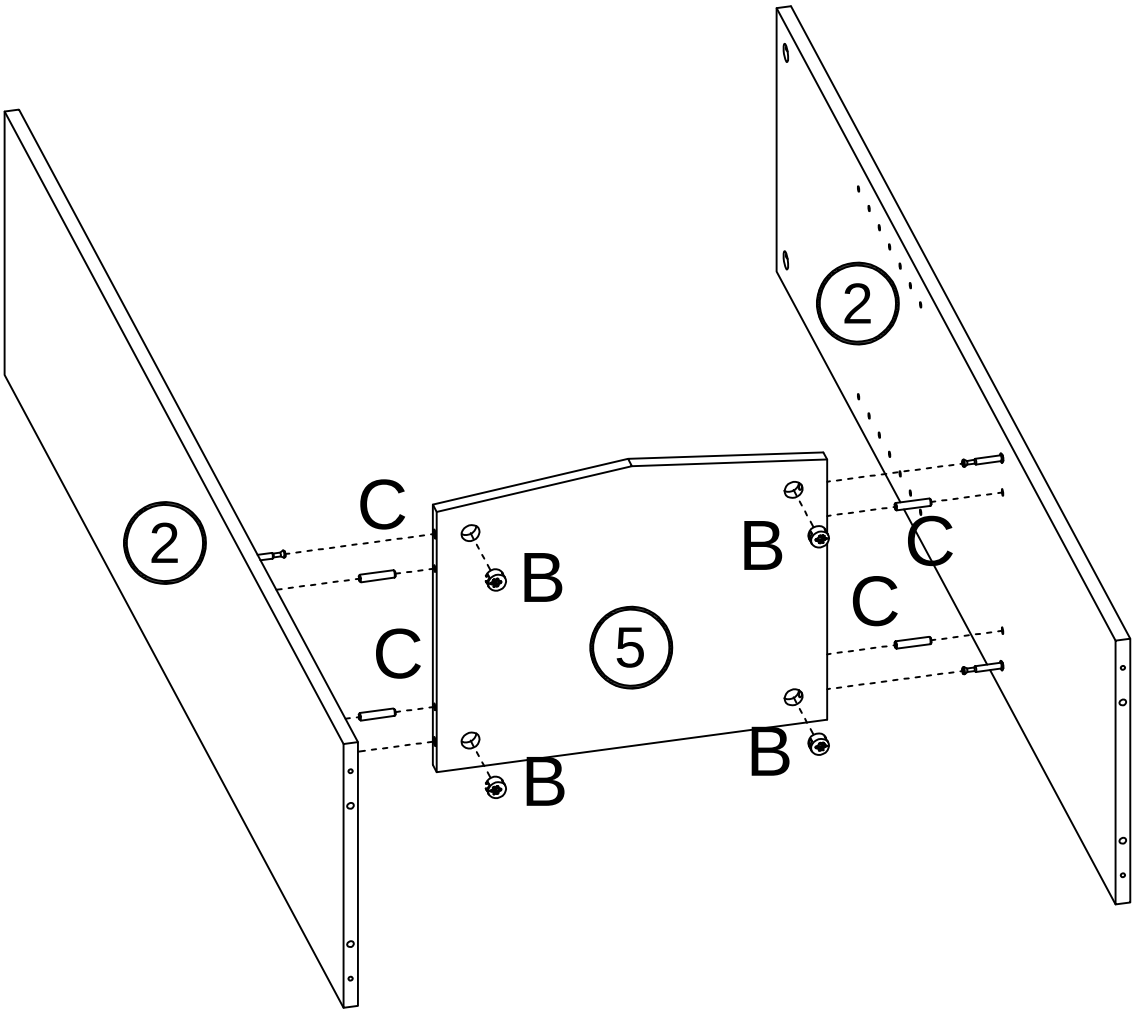

# STEP 3

Ⓐ 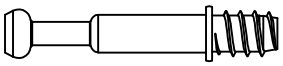 [ 4 ]

KD Bolt
M6x35mm

Ⓟ  [ 1 ]

P4



P2

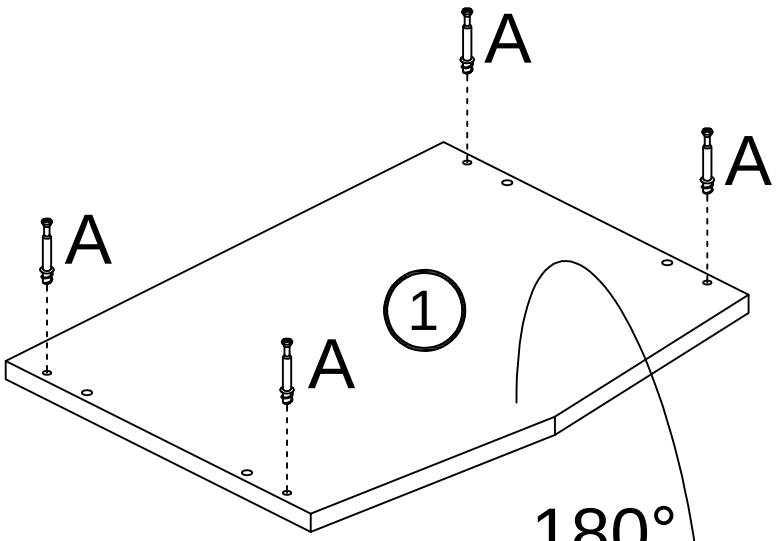


180°

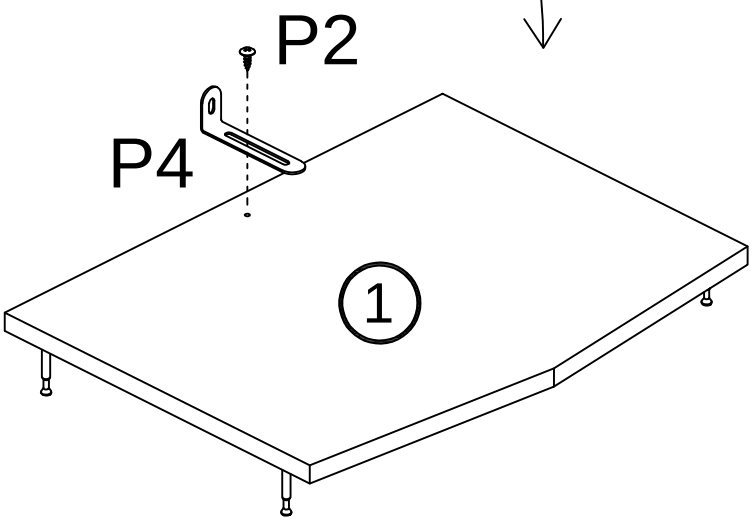


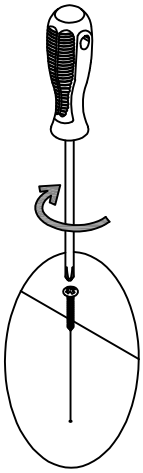

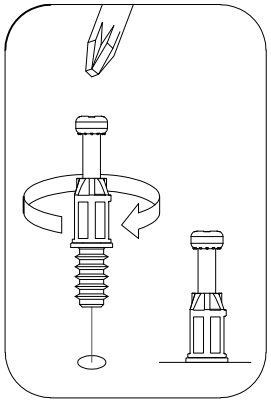

# STEP 4

Ⓑ 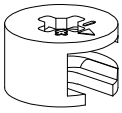 [ 4 ]

KD Cam
Ø15x9.5mm

Ⓒ  [ 4 ]

Wood Dowel
6 x 30mm

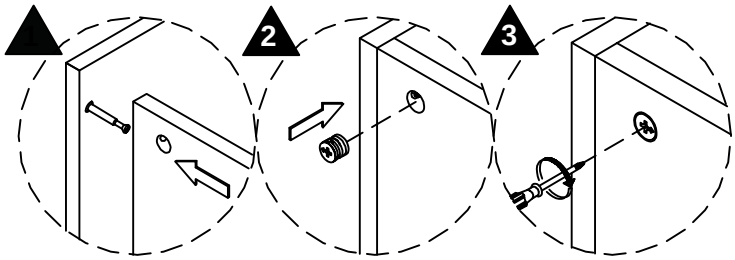


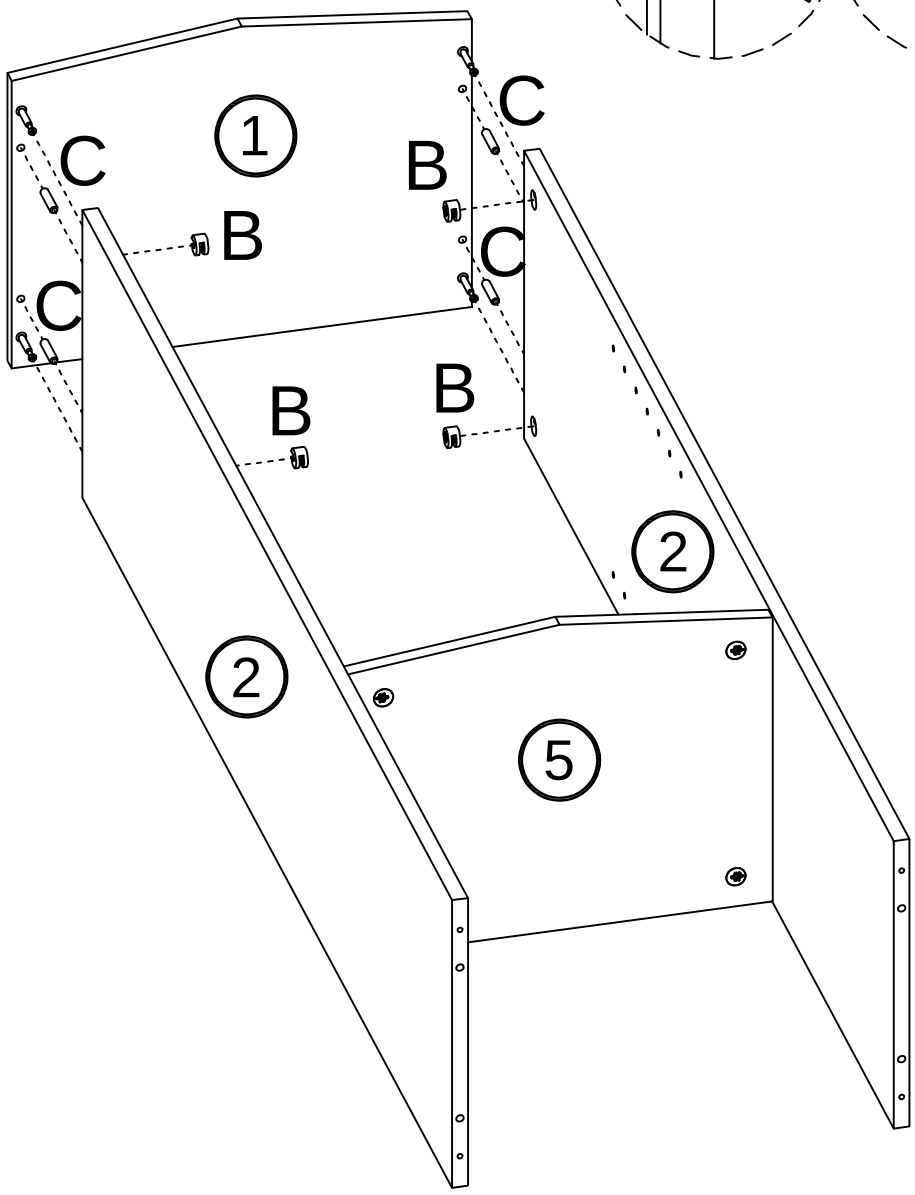

# STEP 5

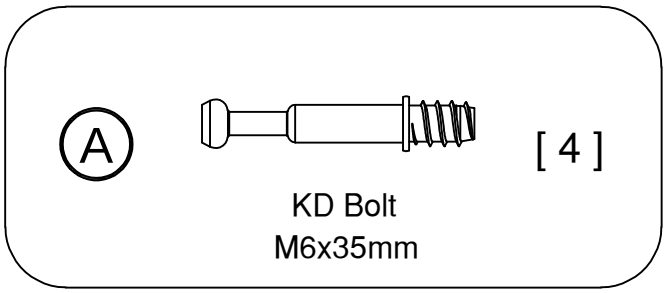


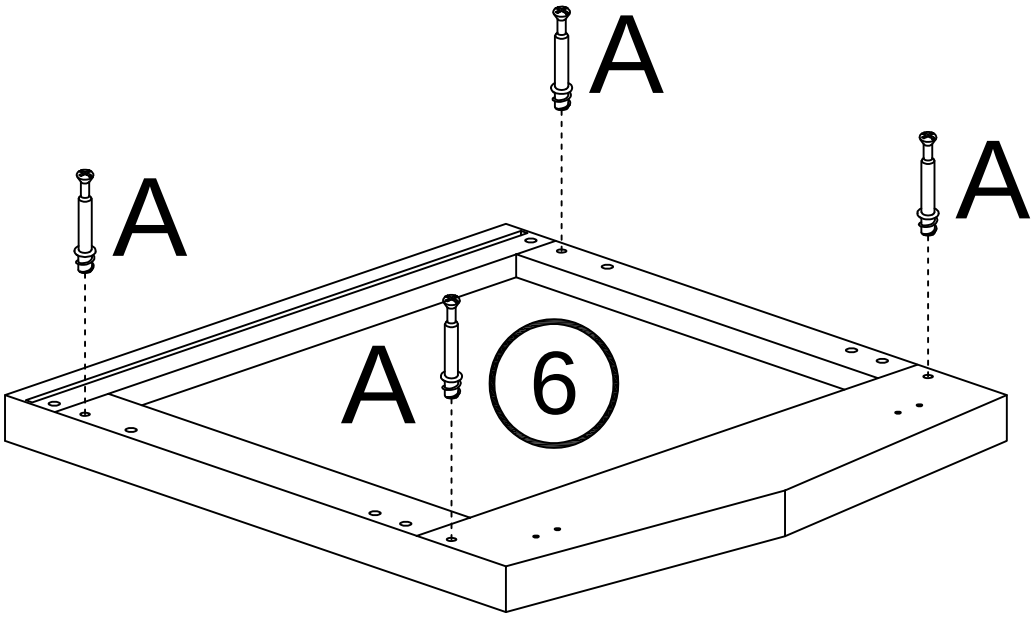


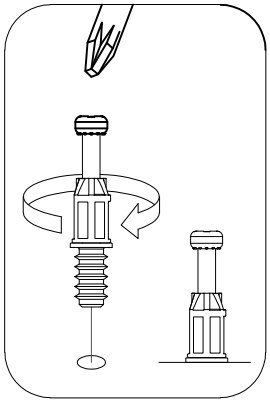

# STEP 6

Ⓒ  [ 4 ]

Wood Dowel
6 x 30mm

Ⓓ  [ 4 ]

Ø5.0x48mm

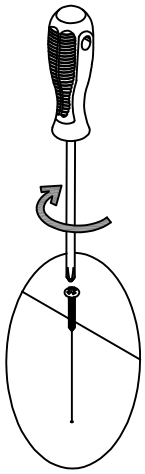

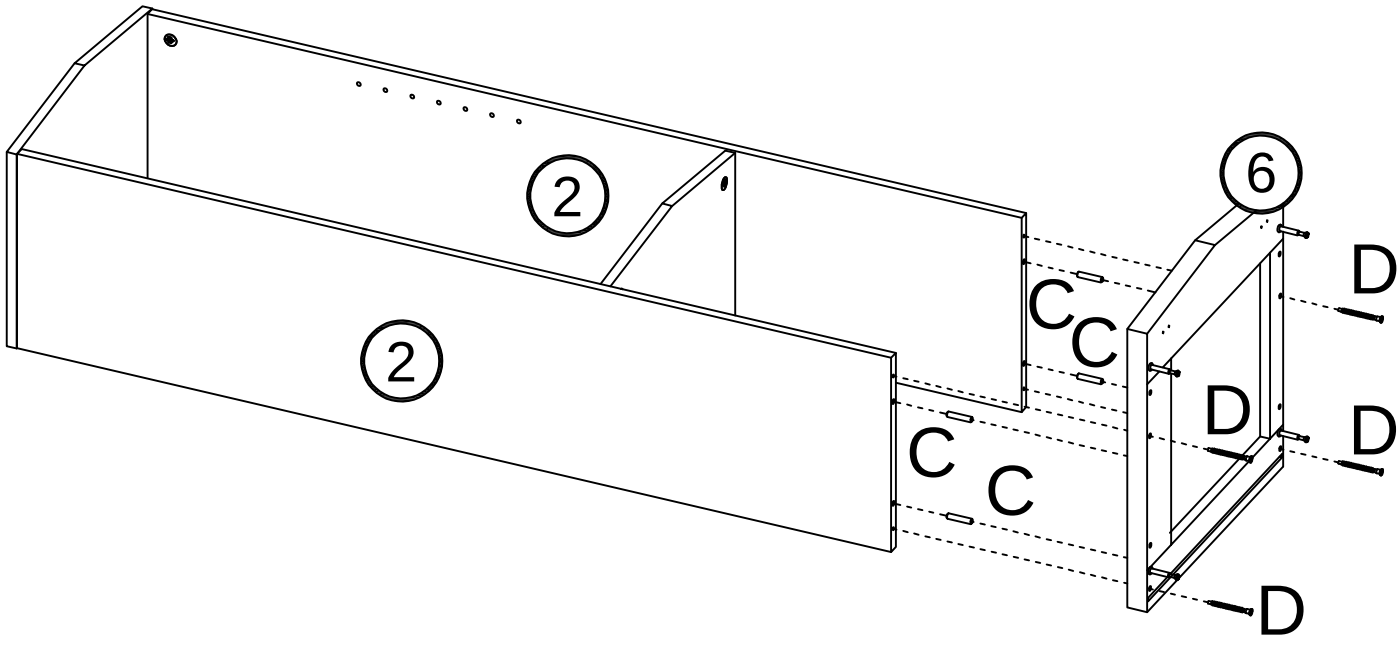

# STEP 7

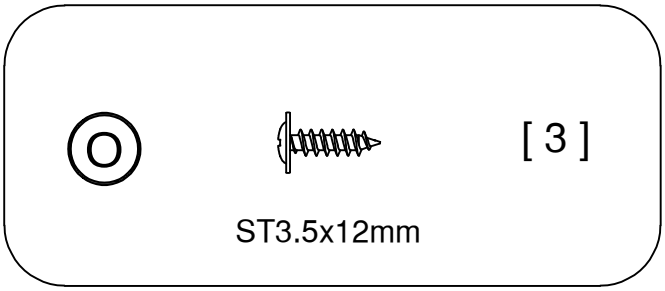


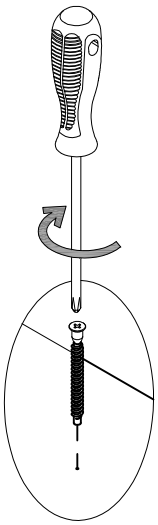

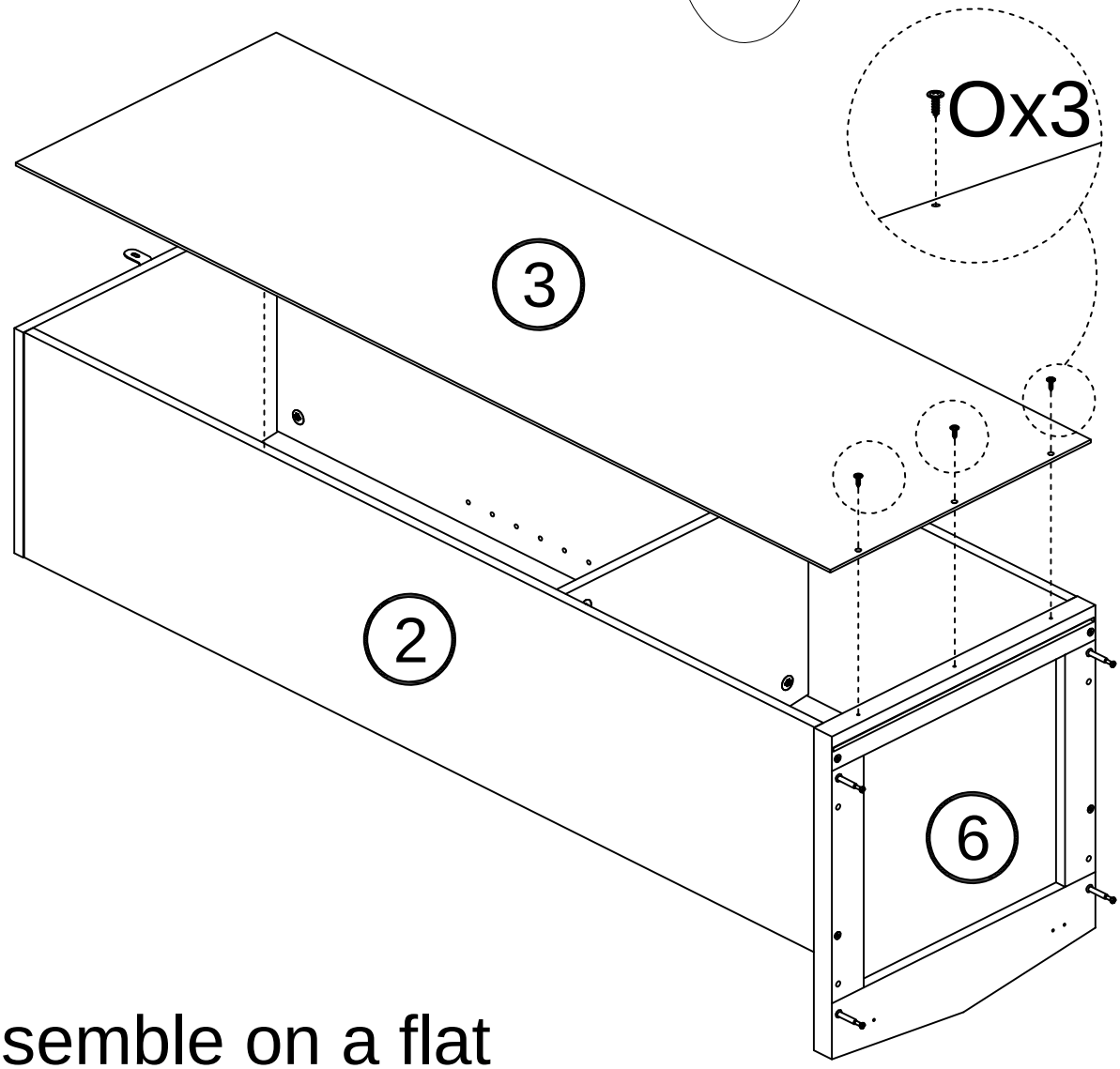


Assemble on a flat
clean and soft surface.

# STEP 8

J 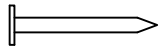 [ 13 ]

Nail

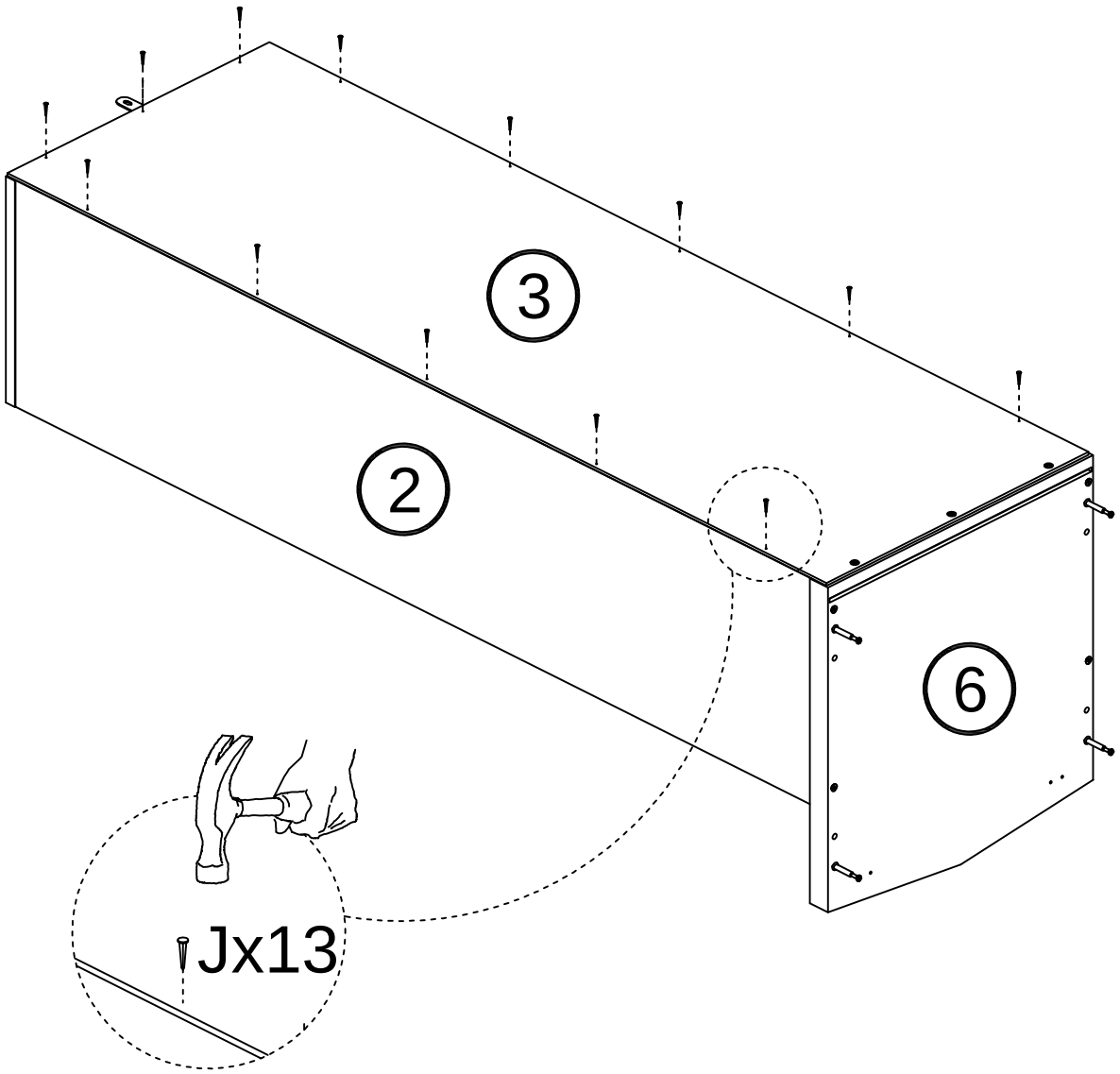

# STEP 9

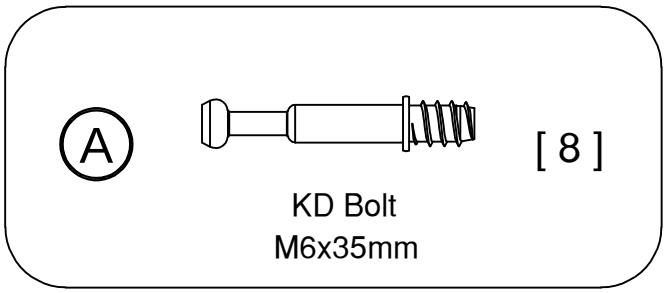


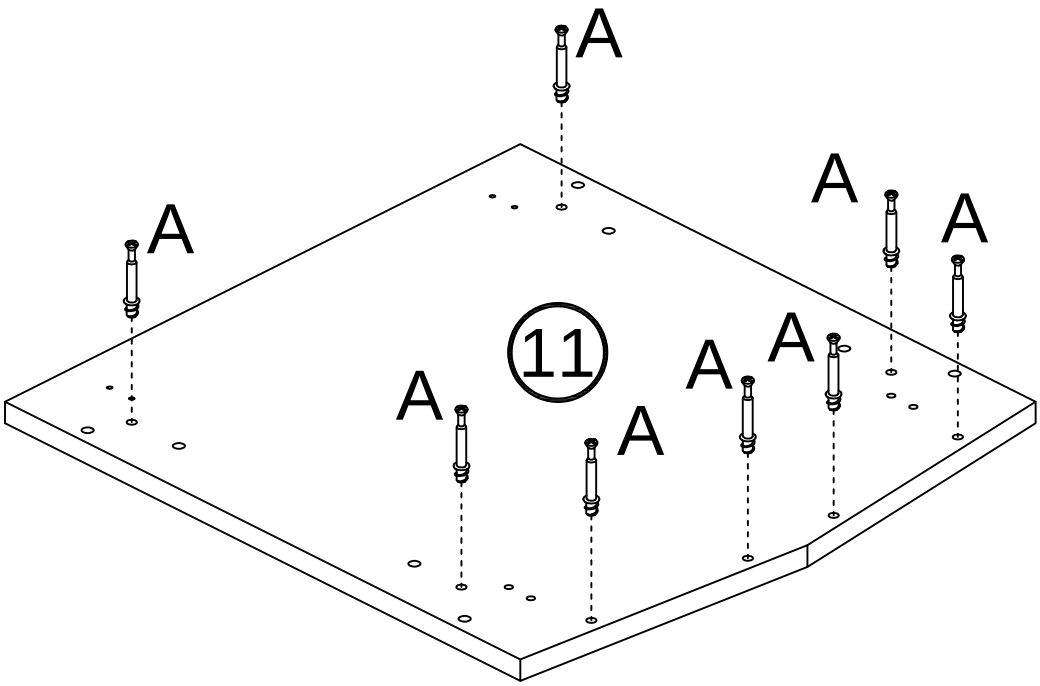


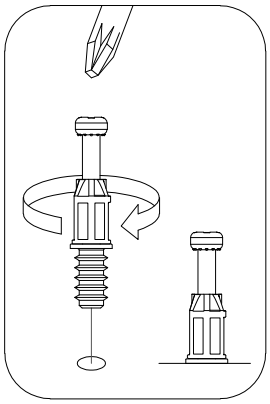

# STEP 10

Ⓑ 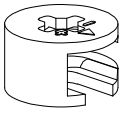 [ 8 ]

KD Cam
Ø15x9.5mm

Ⓒ  [ 4 ]

Wood Dowel
6 x 30mm

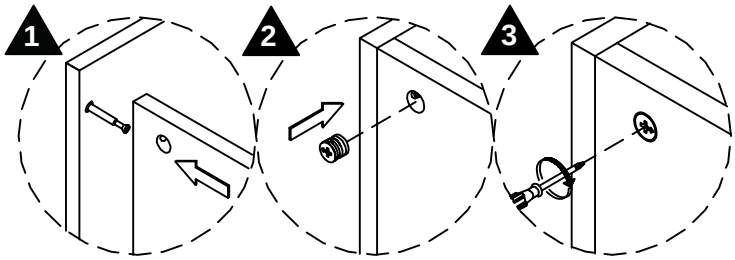


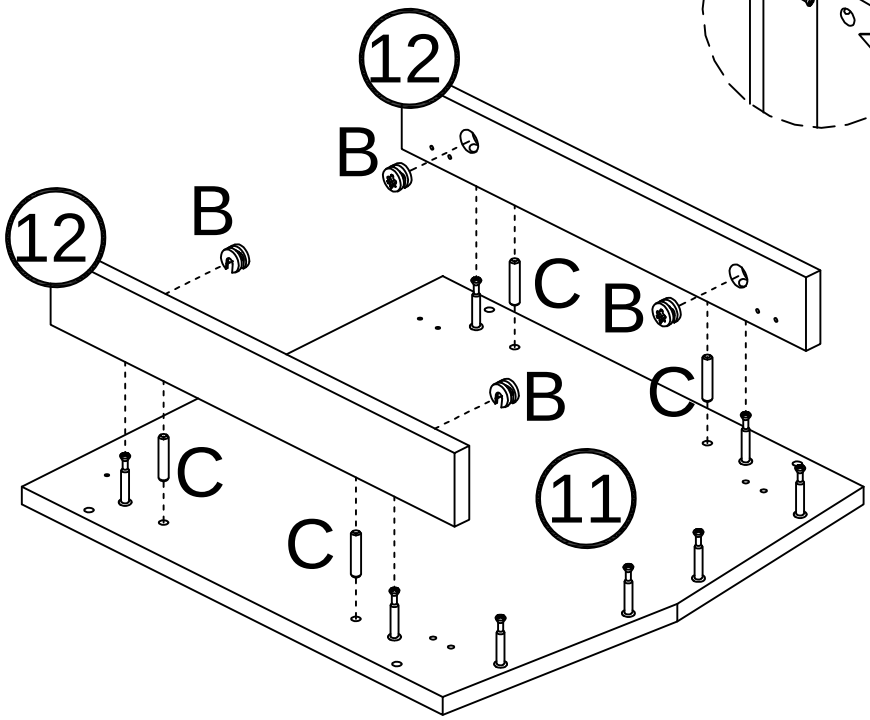


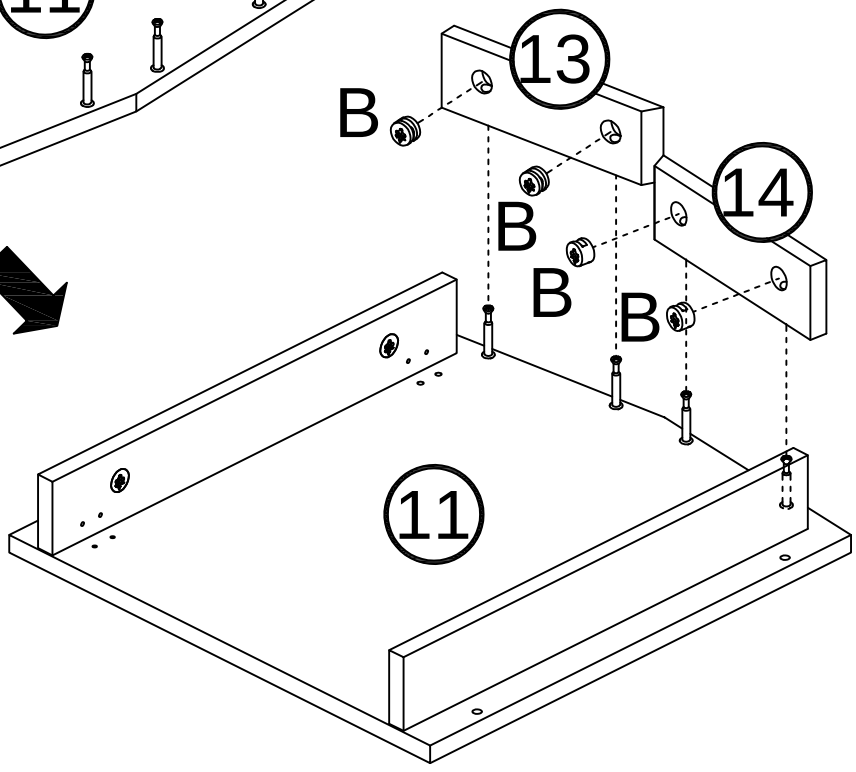

# STEP 11

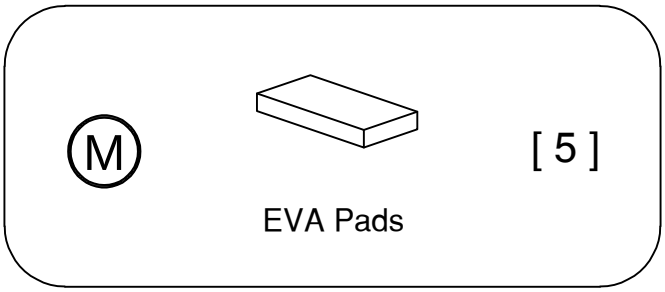


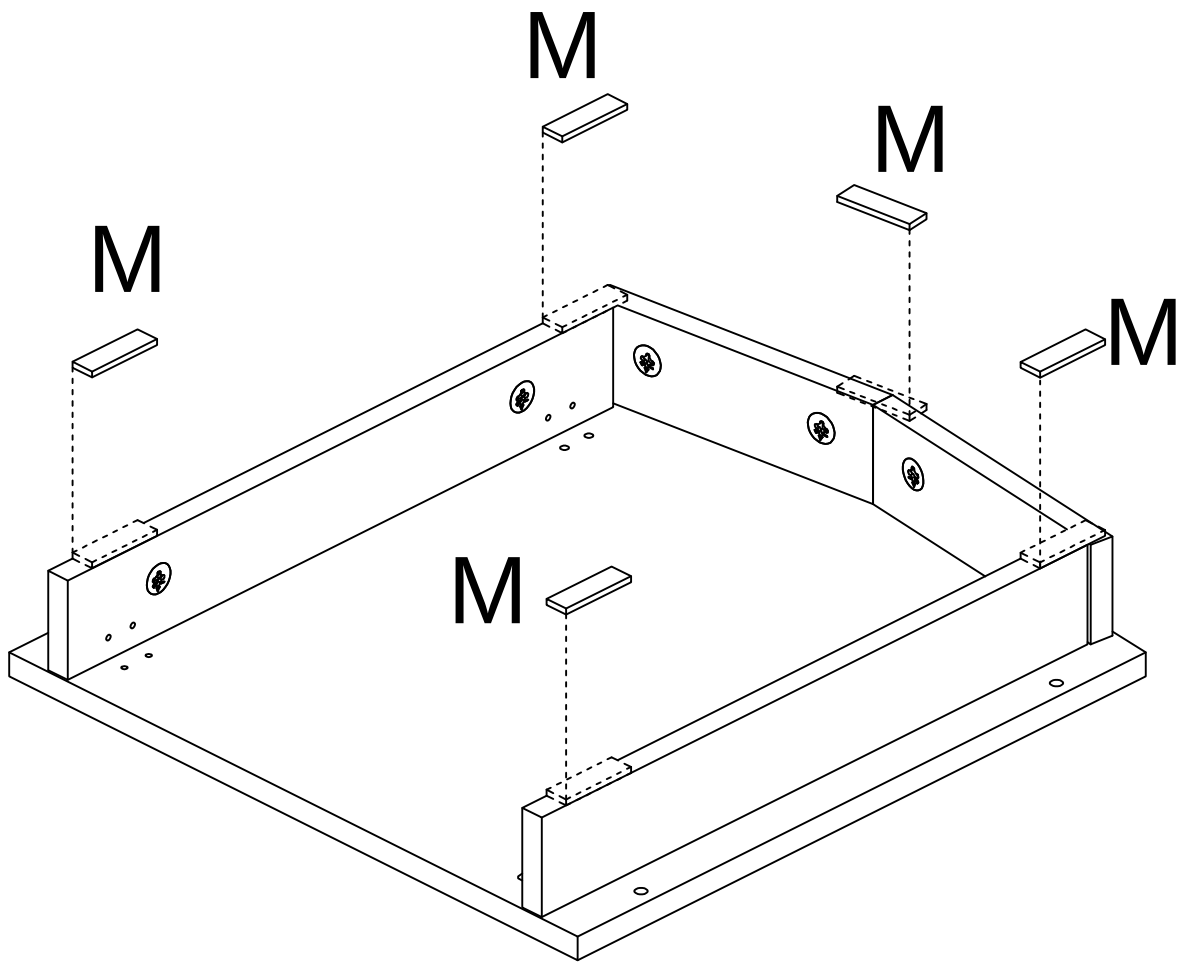


First,stick the EVA pad in place,
then tighten the KD Cam.

# STEP 12

Ⓔ 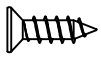 [ 16 ]

ST3.5x12mm

Ⓚ 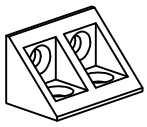 [ 4 ]

Plastic Triangle Bracket

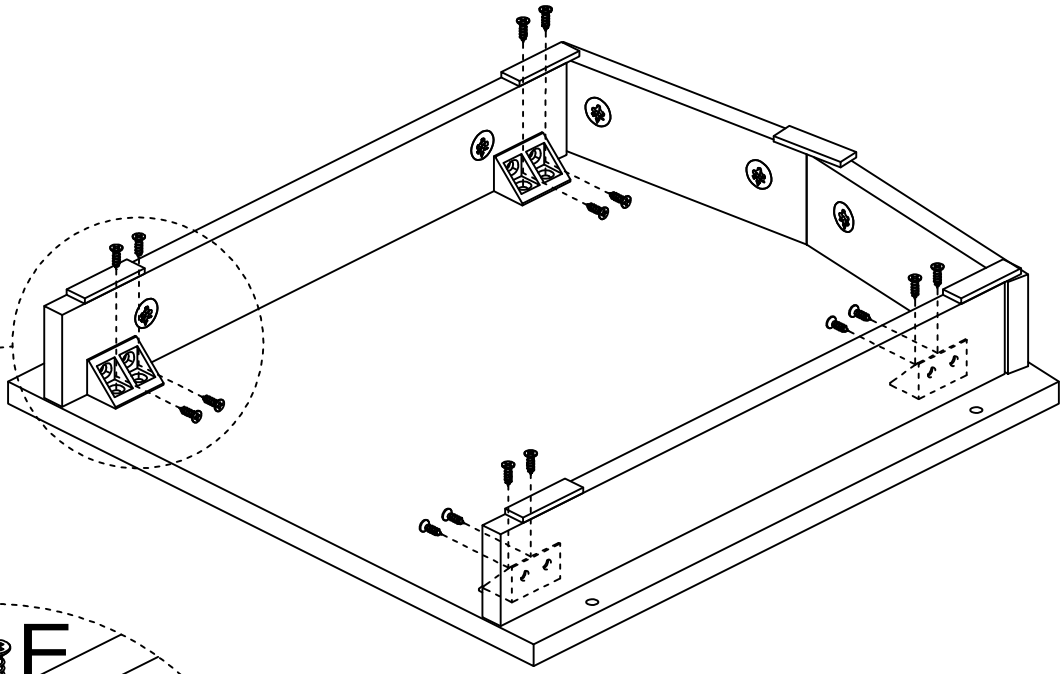

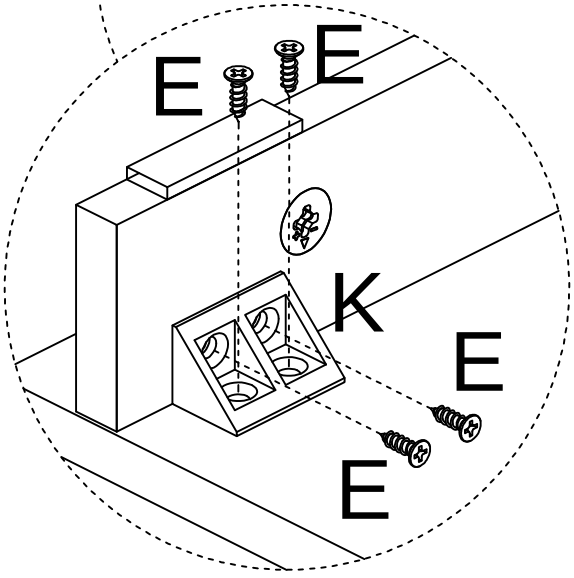


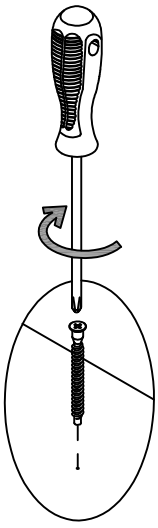

# STEP 13

Ⓒ  [ 4 ]

Wood Dowel
6 x 30mm

Ⓓ  [ 4 ]

Ø5.0x48mm

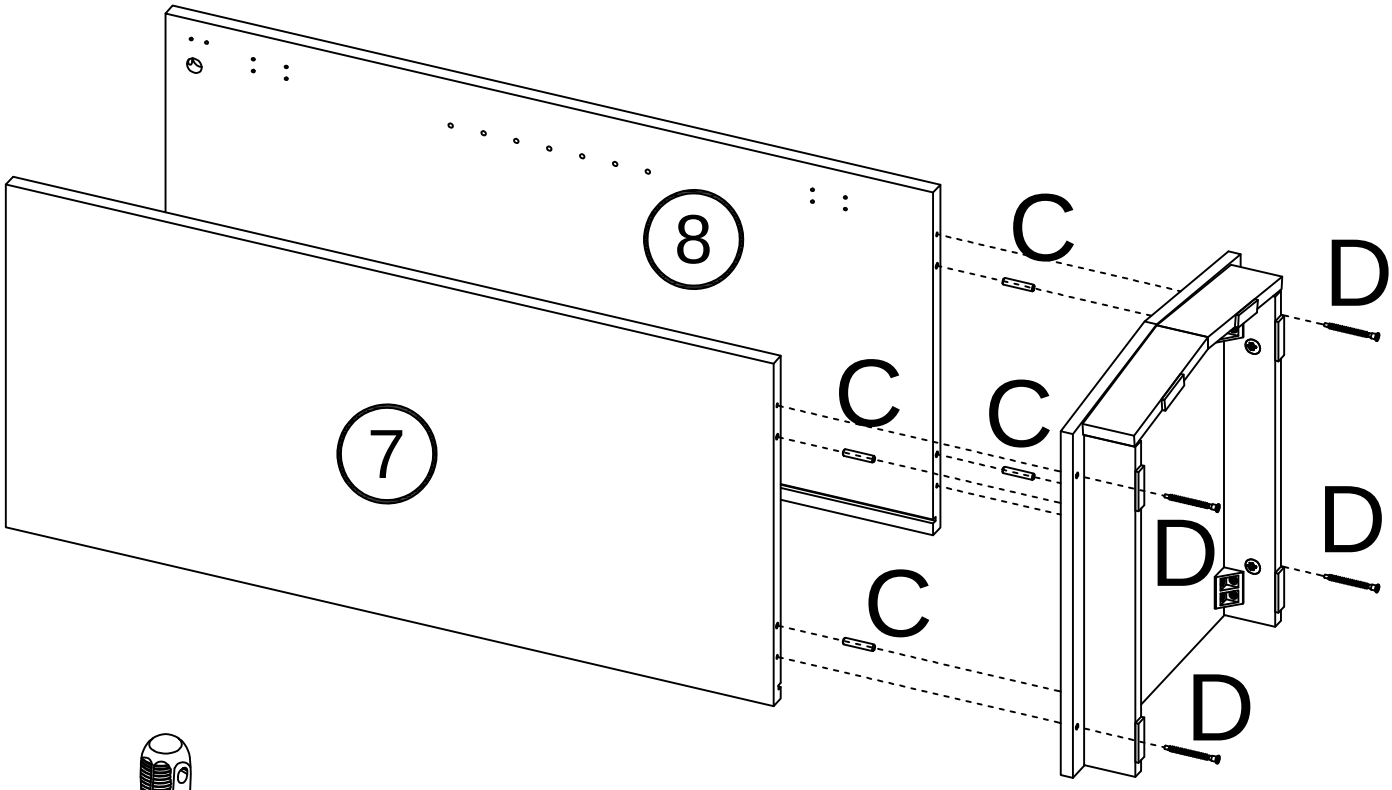


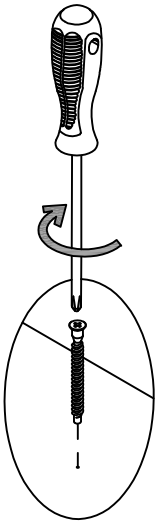

# STEP 14

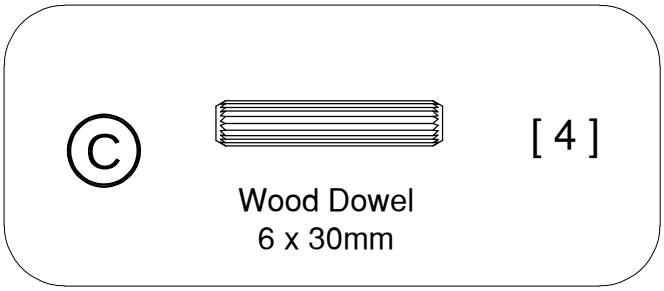


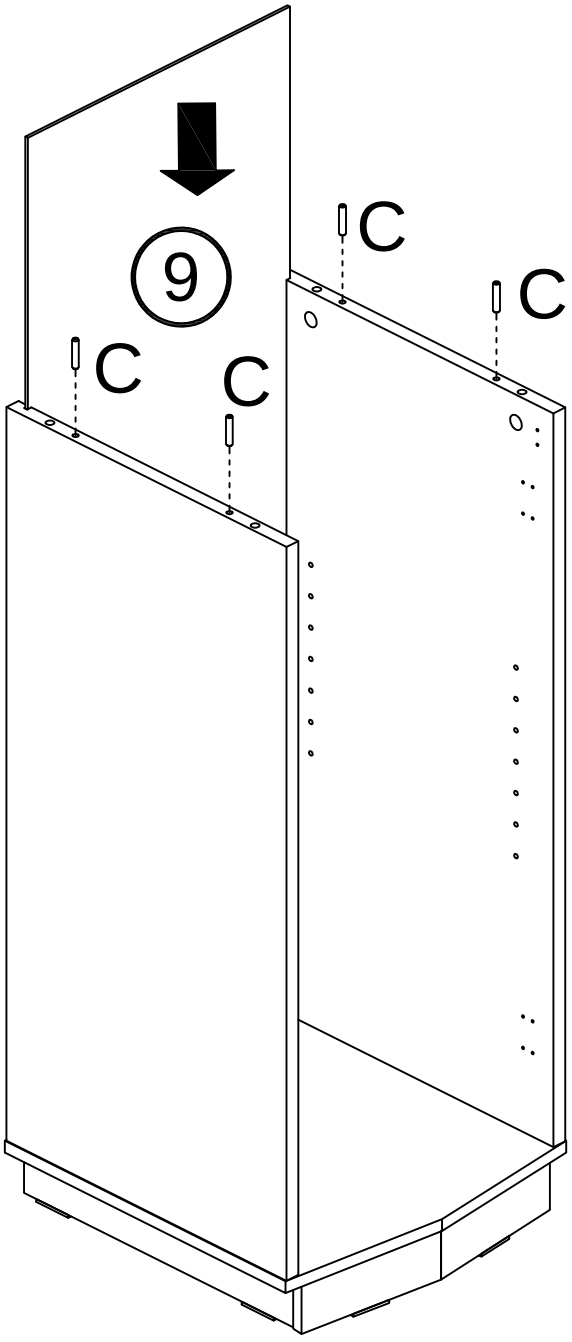

# STEP 15

Ⓑ

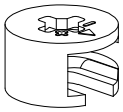

KD Cam
Ø15x9.5mm

[ 4 ]

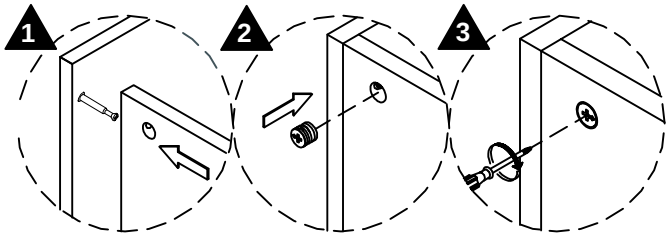


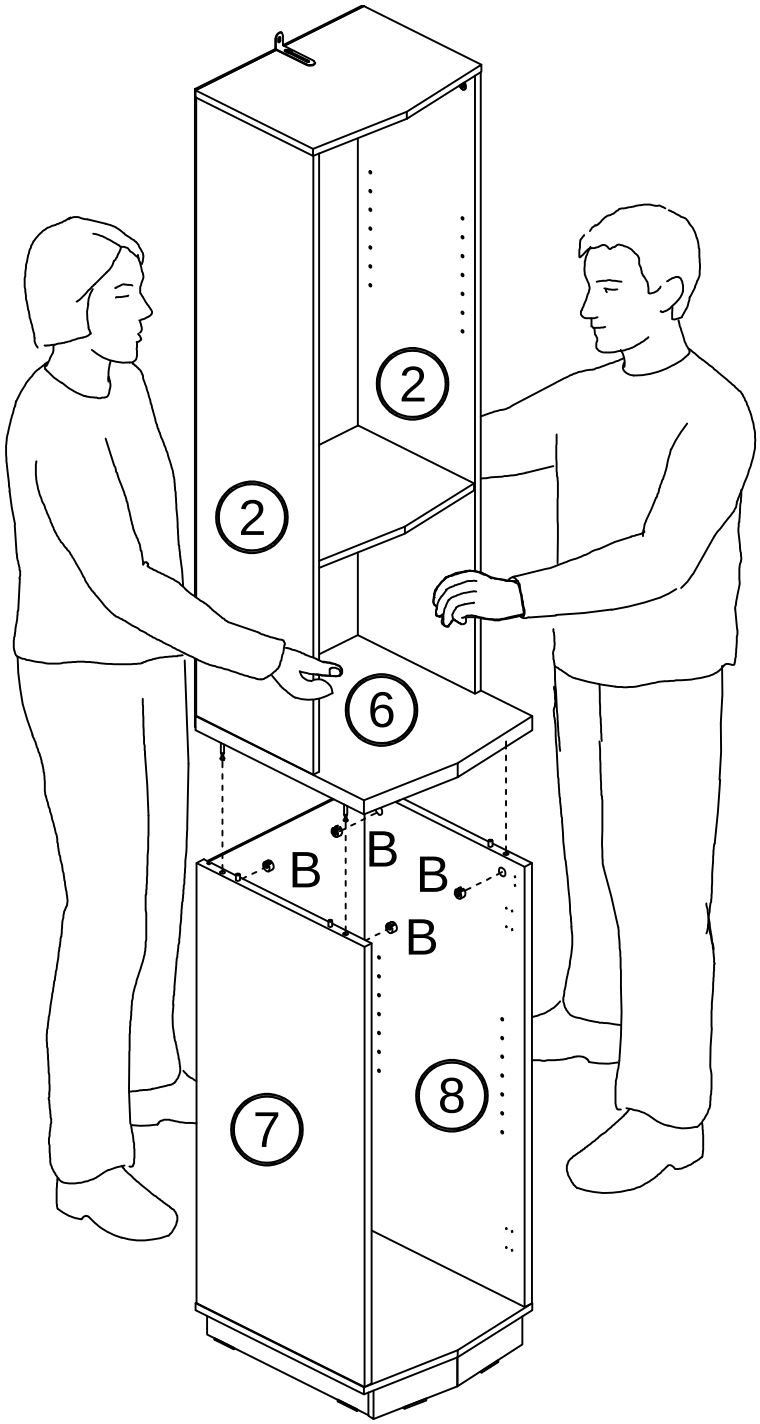

# STEP 16

Ⓔ 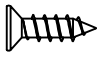 [ 8 ]

ST3.5x12mm

Ⓙ 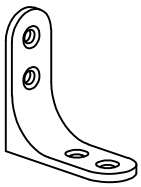 [ 2 ]

L Bracket

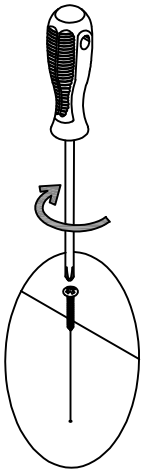

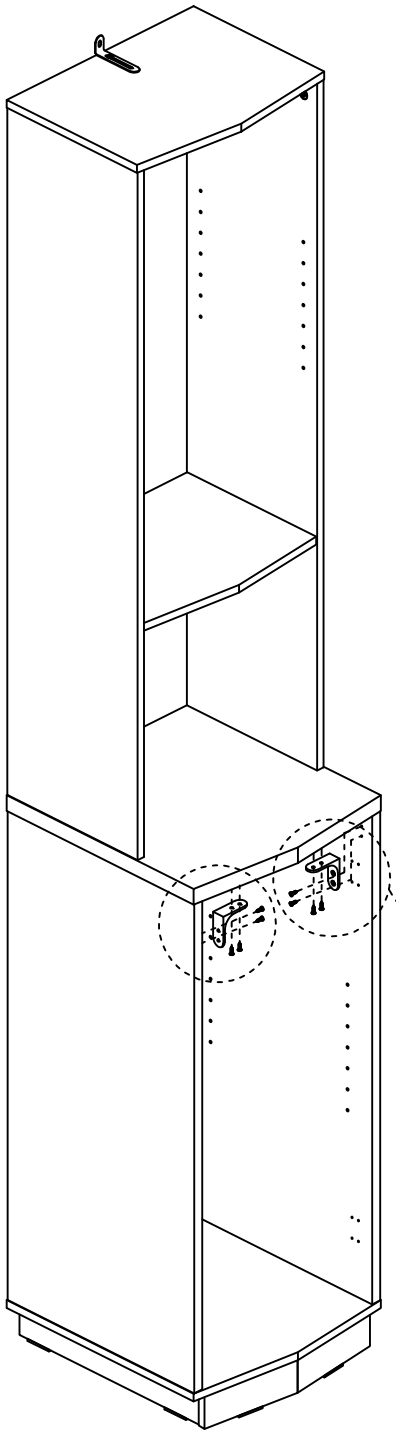

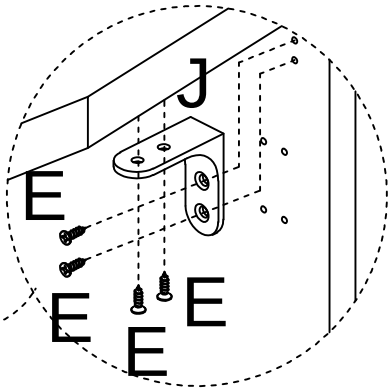

# STEP 17

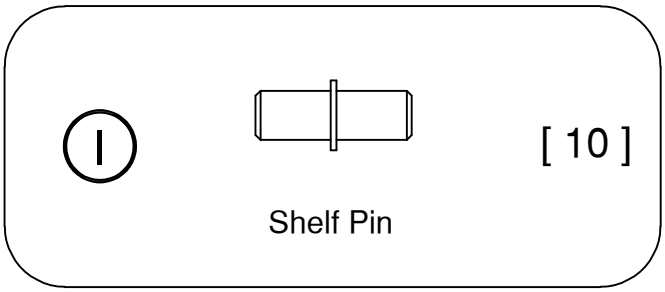


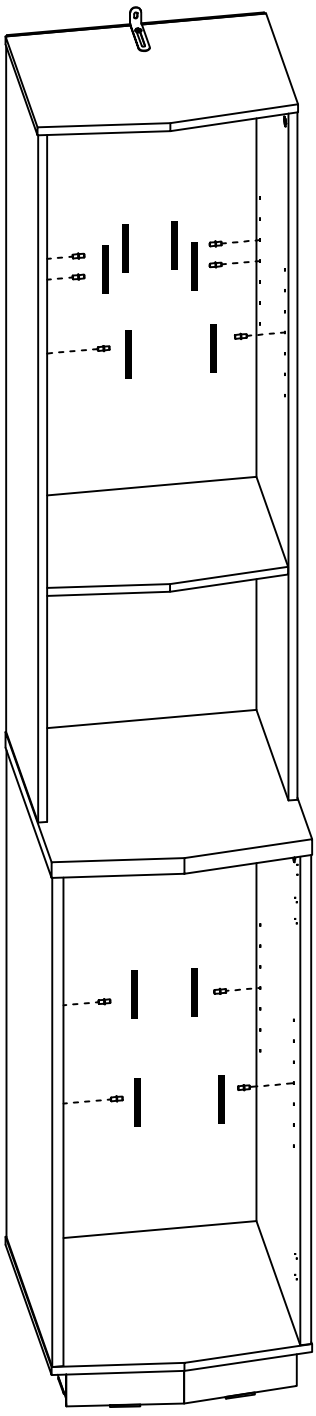

# STEP 18

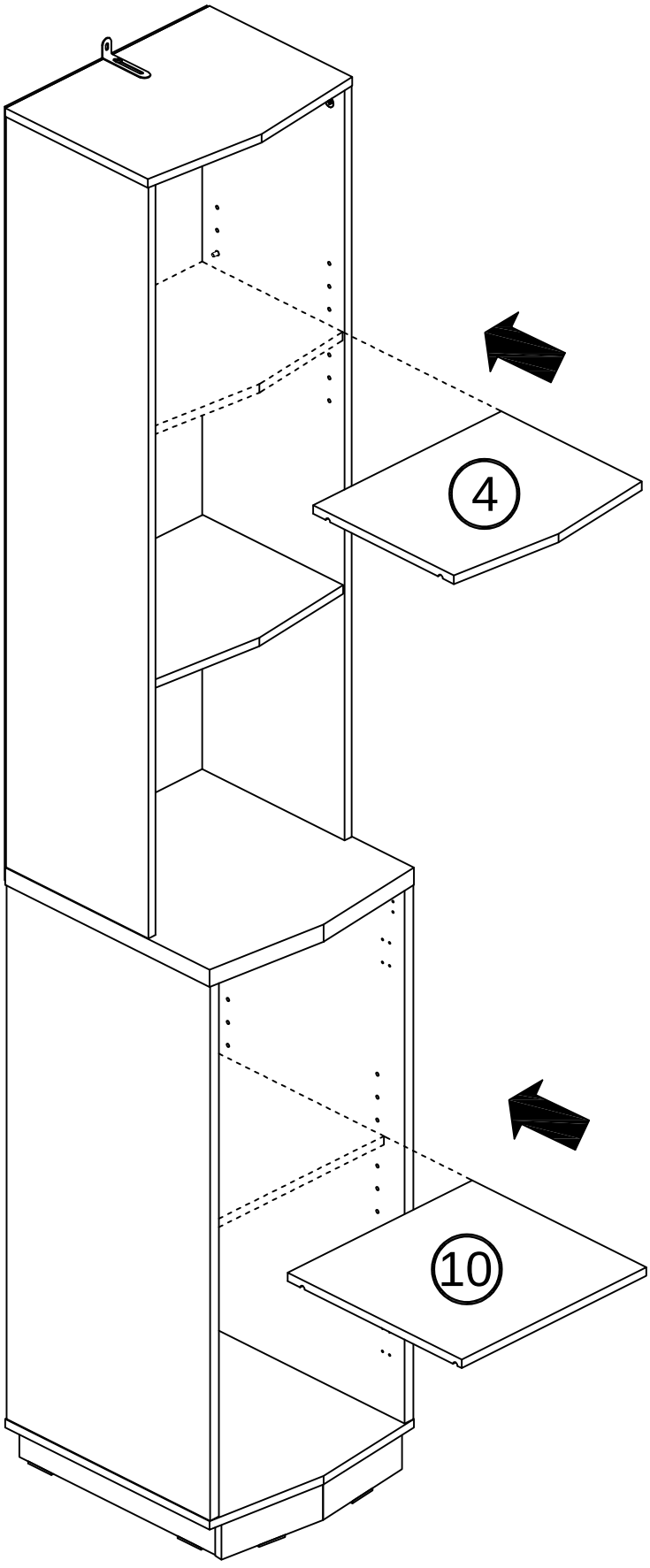

# STEP 19

Ⓖ  [ 10 ]

ST3.0x16mm

Ⓛ 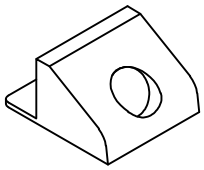 [ 10 ]

Back Clip

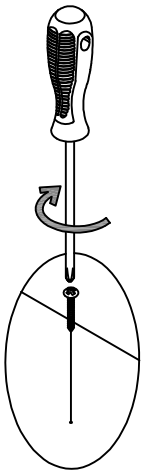

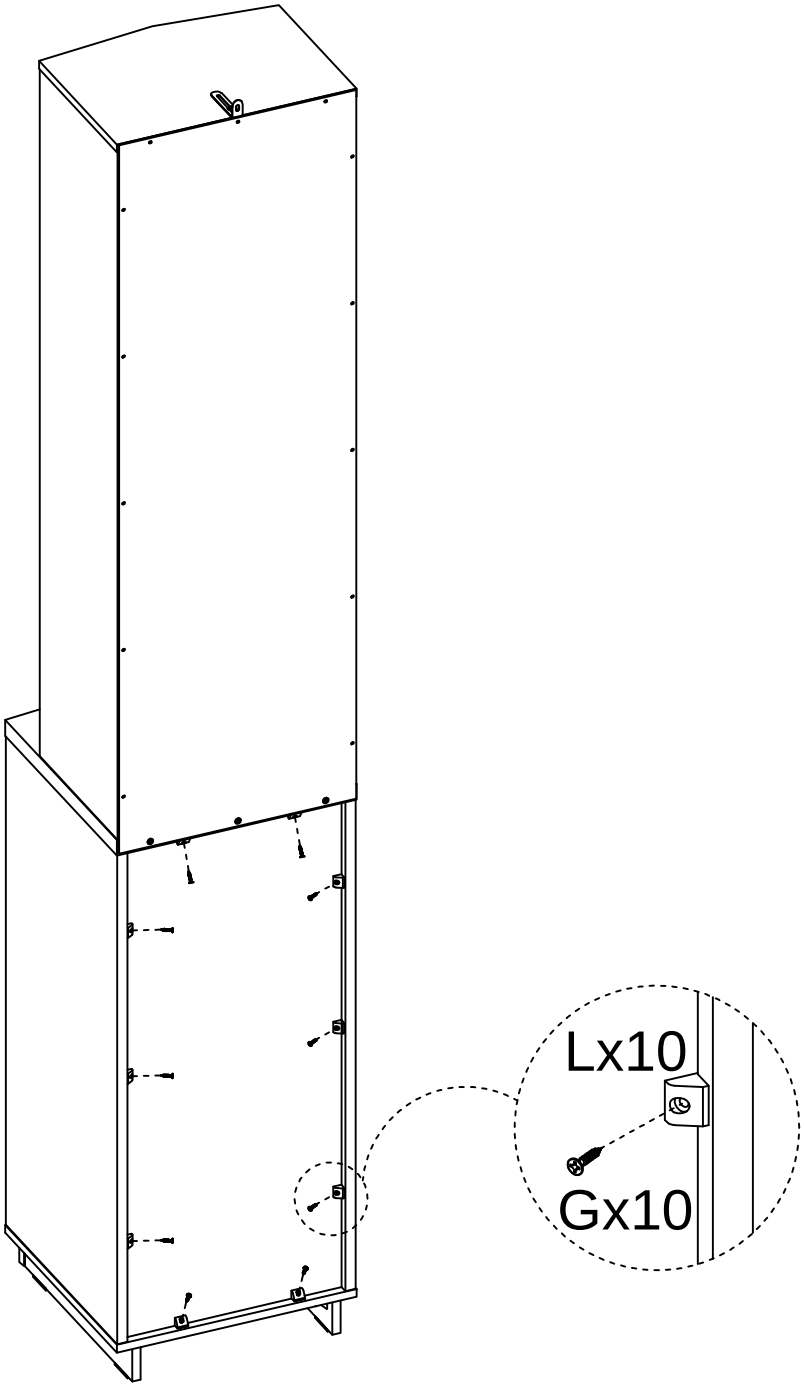

# STEP 20

Ⓕ 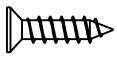 [ 4 ]

ST3.5x14mm

Ⓗ 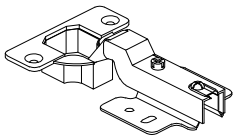 [ 2 ]

Half overlay Hinge

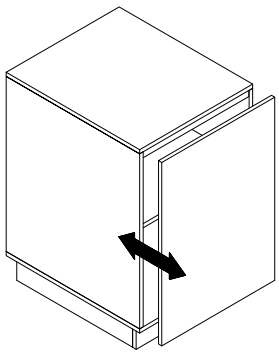

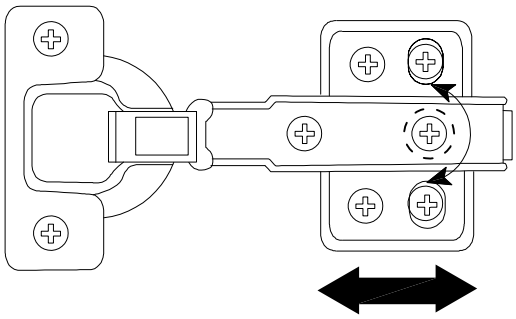

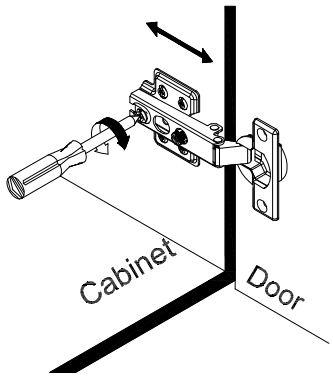


Loosen the screws,then install the door panel.

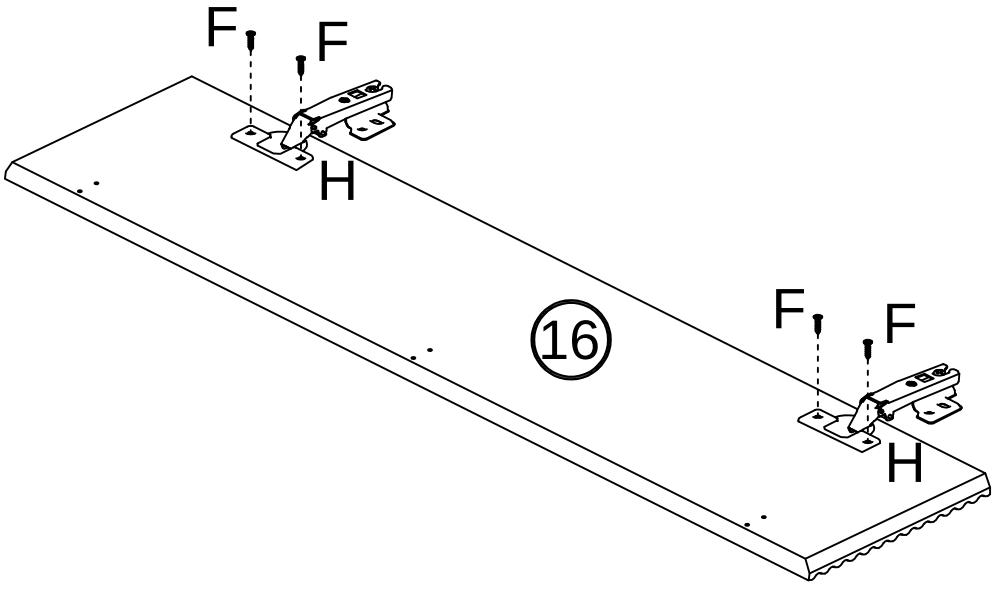


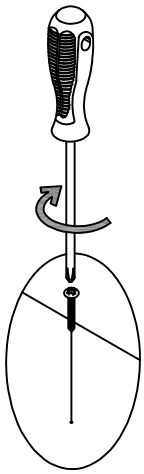

# STEP 21

Ⓔ 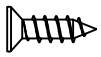 [ 12 ]

ST3.5x12mm

Ⓡ 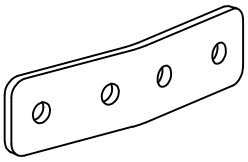 [ 3 ]

V Bracket

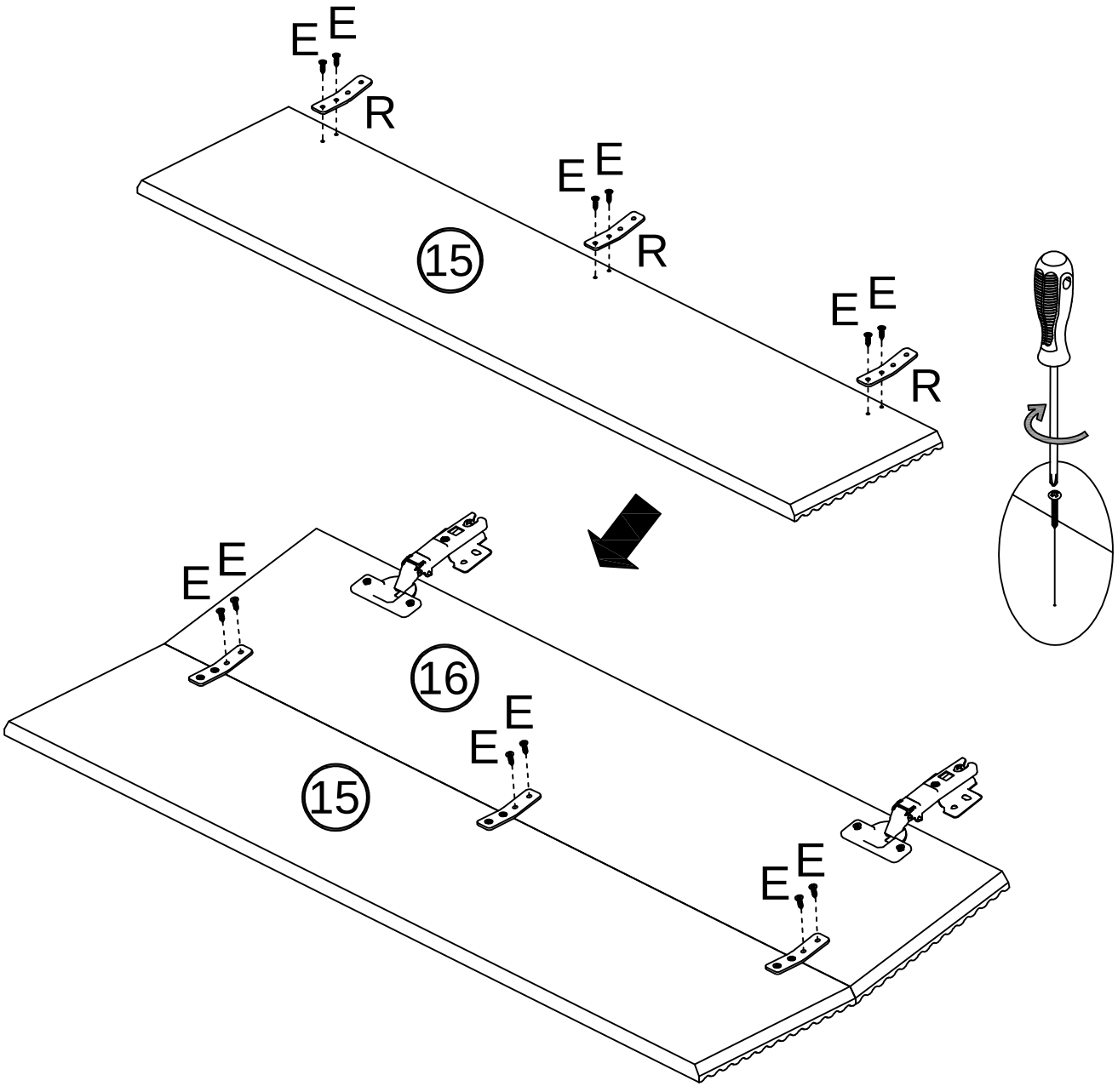

# STEP 22

Ⓕ [ 8 ]

ST3.5x14mm

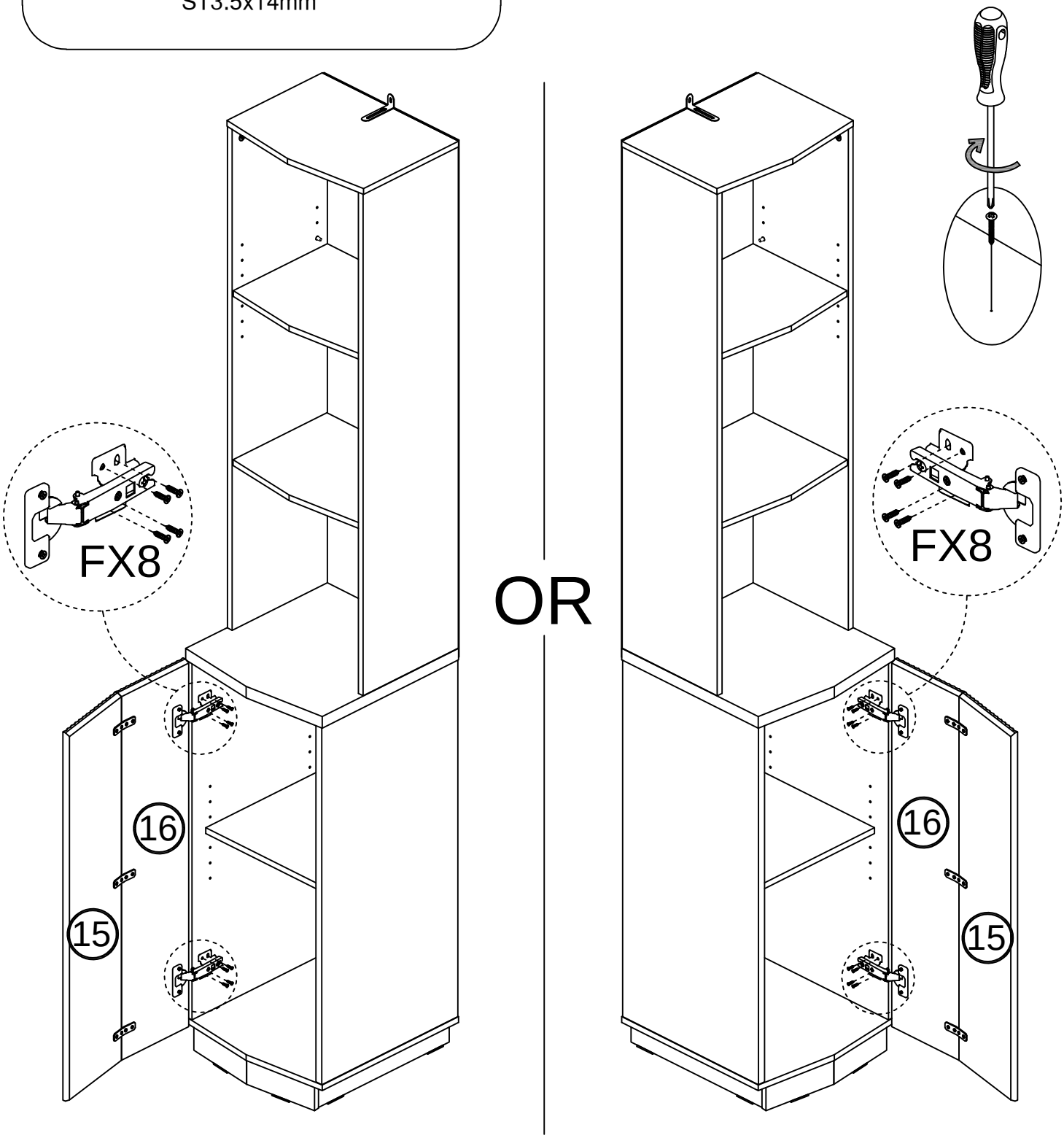

# STEP 23

Method 1：For solid or concrete wall.

1.Choose your desired location on the wall. Have your friend hold the product in place and use a pencil to mark where the anchor will go.

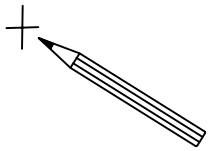



2.Pre-drill holes on the wall with a drill bit that is larger than the diameter of the wall anchors.

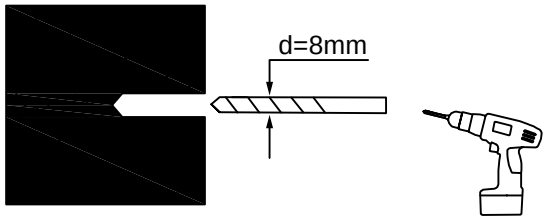


3.Gently insert the wall anchor into the pre-drilled hole.

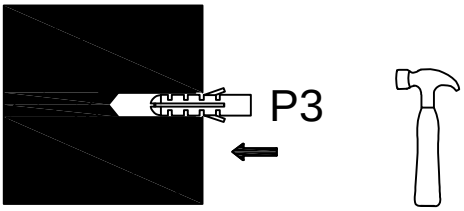


4.Insert the screws into the wall anchor with a screwdriver to complete the installation.

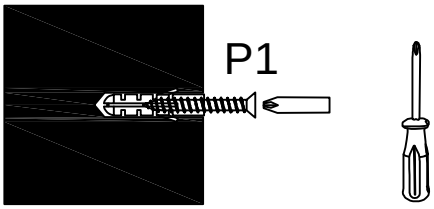


Ⓟ P3 P1 [ 1 ]

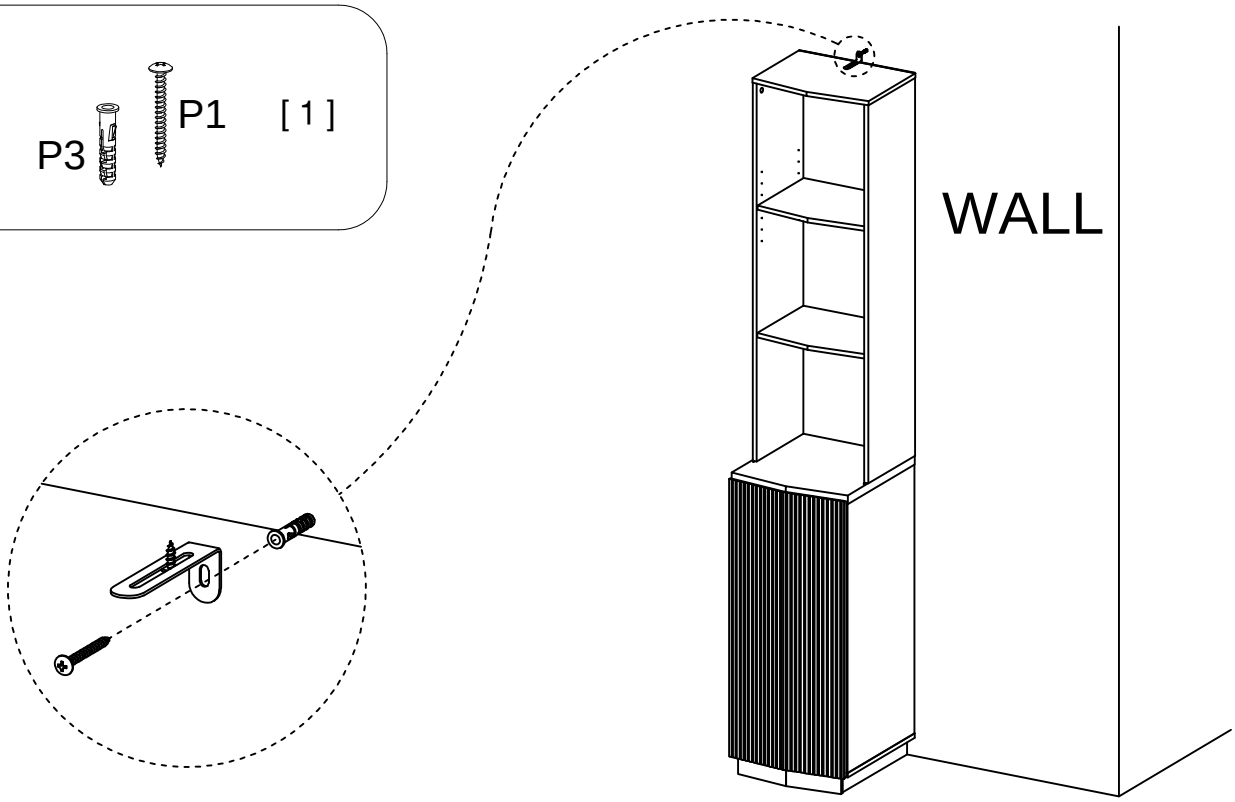

# STEP 24

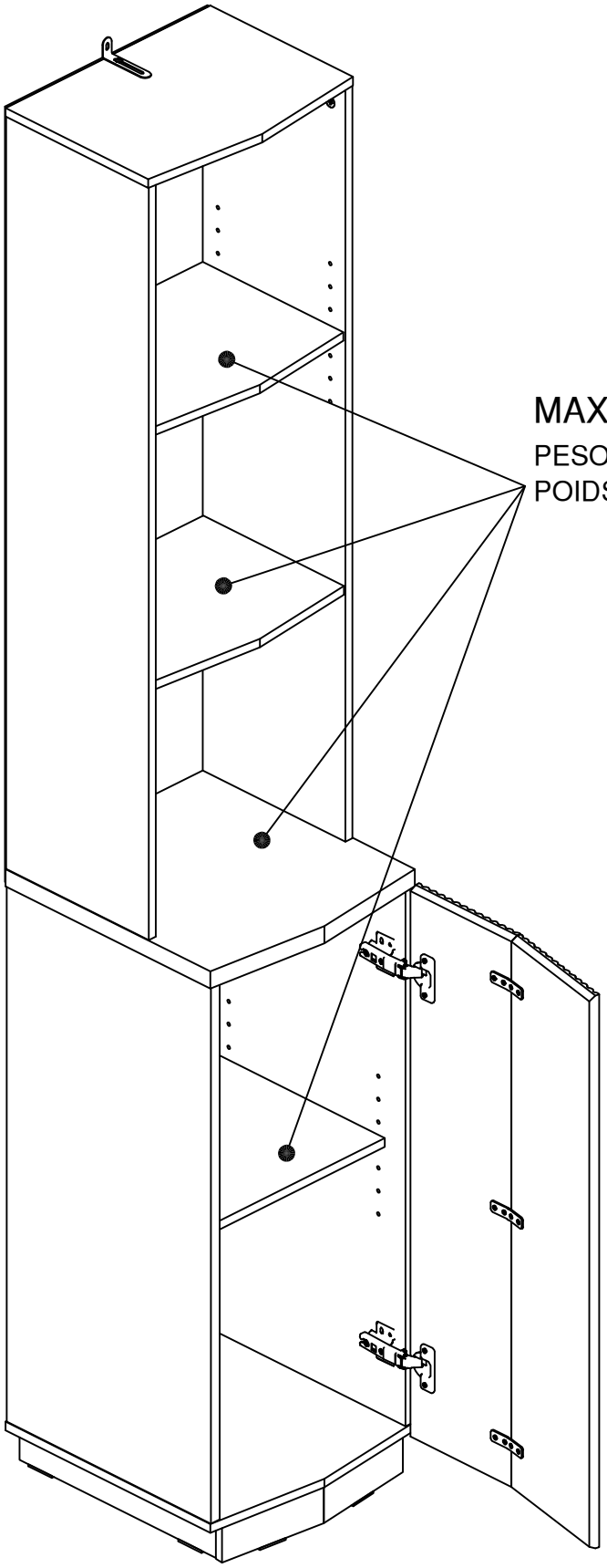

MAXIMUM WEIGHT: 40 LBS

PESO MÁXIMO: 40 LIBRAS

POIDS MAXIMUM:40 LIVRES

# STEP 25

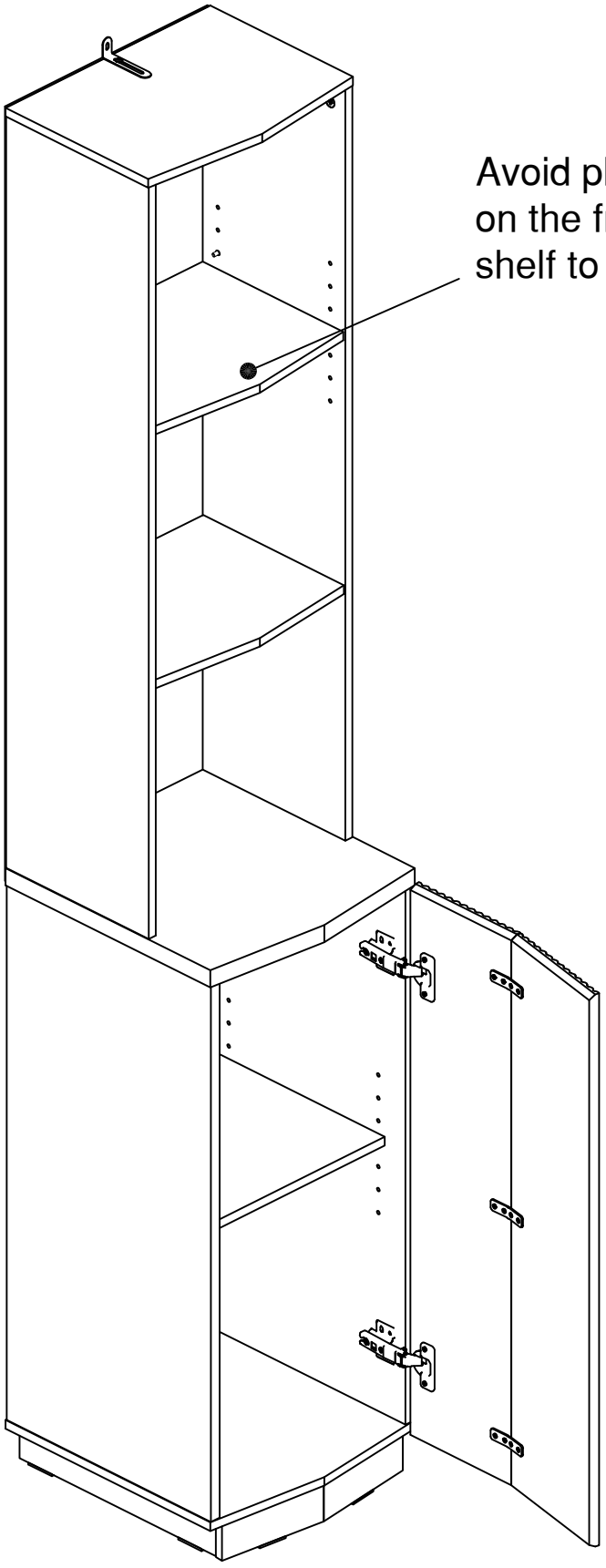

Avoid placing heavy items on the front of the movable shelf to prevent tipping.

# Cabinet Door Adjustment Instructions

## Height adjustment:

a) Locate the height adjustment screws on the hinge.
b) Use the Phillips screwdriver to either tighten or loosen the screws to raise or lower the cabinet door as desired.

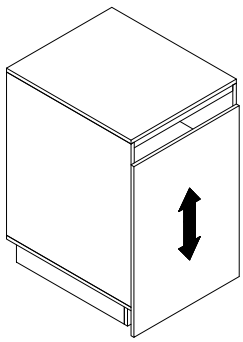

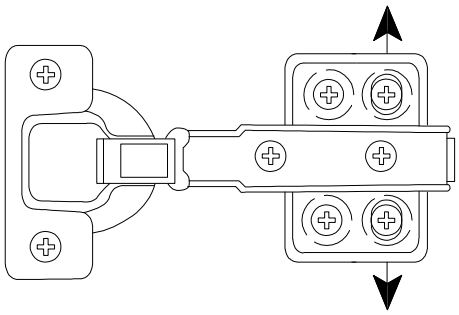

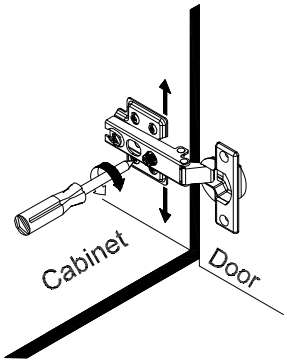


## Side-to-side adjustment:

a) If the cabinet door needs to be moved closer to or away from the cabinet frame, locate the side-to-side adjustment screws on the hinge.
b) Use the Phillips screwdriver to adjust these screws and gradually move the door in the desired direction.

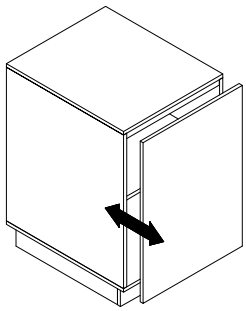

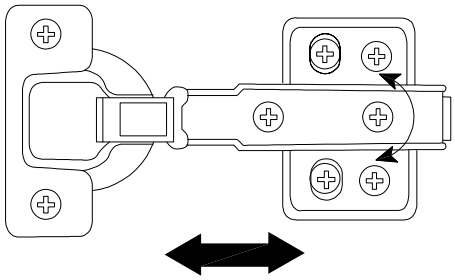

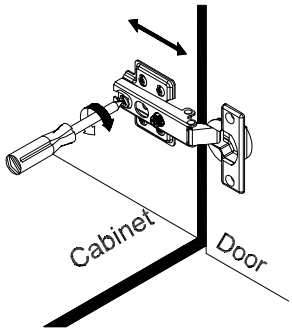


## Depth adjustment (if applicable):

