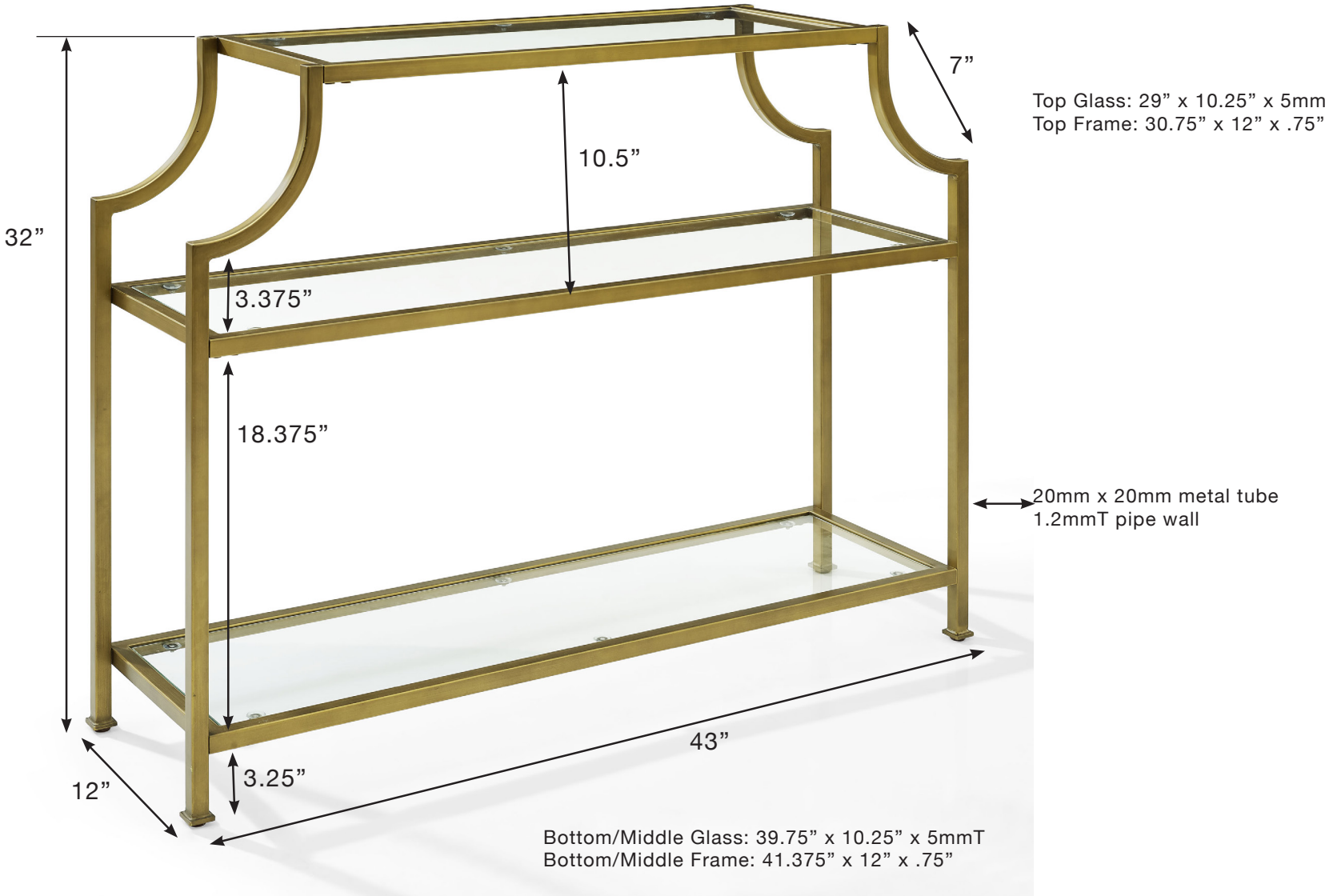# Assembly Guide