ITEM NO.	PART NUMBER	DESCRIPTION	QTY.
1	TU1R-7.5	TUBE	1
2	RGSMT	HUB	2
3	CRRD-34	RING	2
4	BL1T-1	LARGE END BALL	2
5	TU12-.75	SUPPORT	2
6	LP Casting	BACK PLATE	2

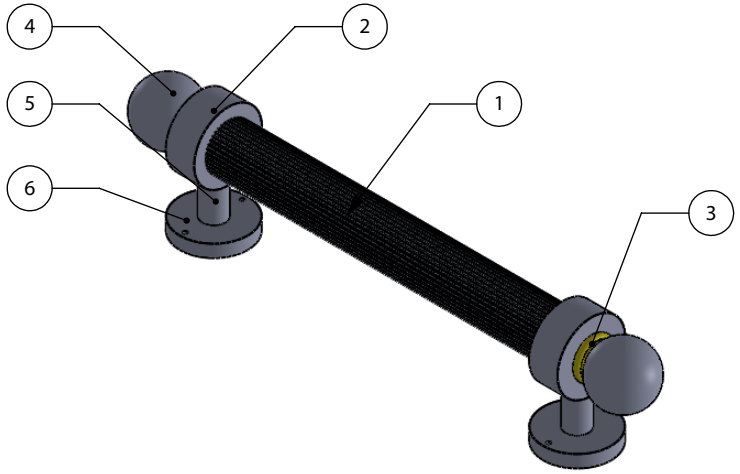

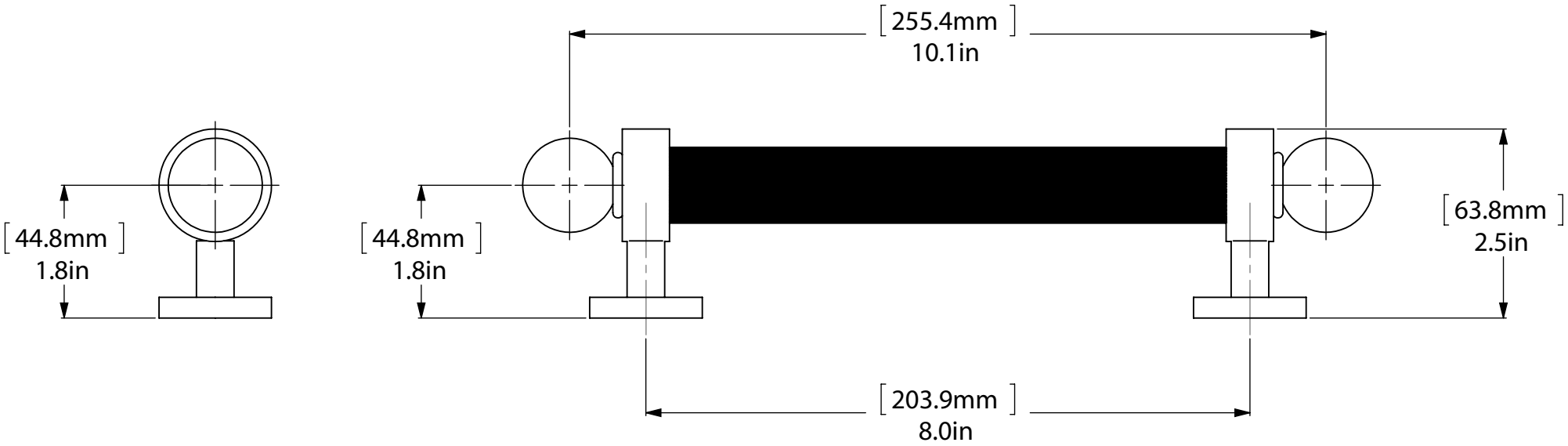

UNLESS OTHERWISE STATED			INITIALS	DATE	ITEM	QTY	DRG/PART NO	CLIENT:			
DO NOT SCALE DRAWING	X.XXX	+/-0.025	DESIGNED	IJM	MATERIAL	BRASS	WEIGHT		FINISH	TBD	
CHAMFER ALL EDGES 0.5X45°	X.XX	+/-0.1	DRAWN	IJM	HEAT TREAT	NA			QUANTITY		
DRAWING ISO	X.X	+/-0.25	CHECKED	R. ANDRIS	CUSTOMER		CUSTOMER No		---		
	X	+/-0.75	PROJ.ENG		DESCRIPTION:				DRAWING No.		REV
	ANGLES		SAFETY								0
	X.XX	+/-0.05°	APPROVED	R. ANDRIS							
	X.X	+/-0.1°	FILENAME						SCALE 1:2	SHEET: 01	A4
	X	+/-0.5°									
FIRST ANGLE PROJECTION	MACHINED FINISH	3.2									