Assembly Instructions

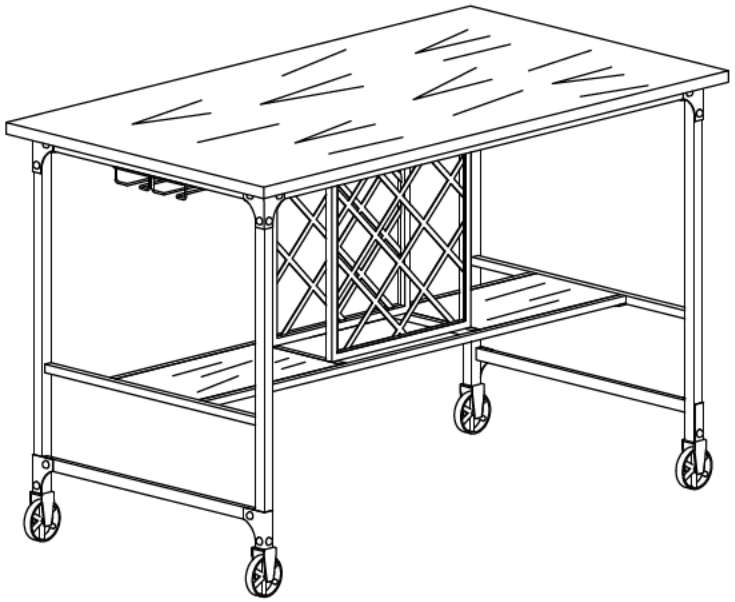

ASSEMBLY RATING

The Assembly Rating is a 5-point system that shows the degree of effort needed in assembling a specific product (with 1 being easy and 5 being difficult). For some products, two persons are recommended.

EASY ●●●○○ DIFFICULT

Tools Required For Assembly:

Allen Wrench 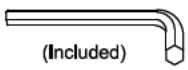 (Included)



2 PERSONS RECOMMENDED

ASSEMBLY & CARE ADVICE

FOR YOUR FURNITURE TO LAST,CORRECT ASSEMBLY AND PROPER MAINTENANCE ARE NECESSARY.
PLEASE FOLLOW THE INFORMATION PROVIDED BELOW TO FULLY ENJOY YOUR FURNITURE.

BASIC ASSEMBLY TECHNIQUES

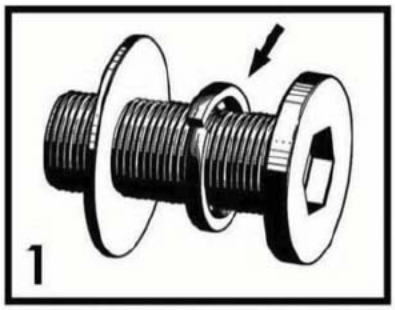

When lock or spring washer is used in an assembly, please make sure the lock or spring washer is placed between the larger flat washer and the head of the screw or bolt.

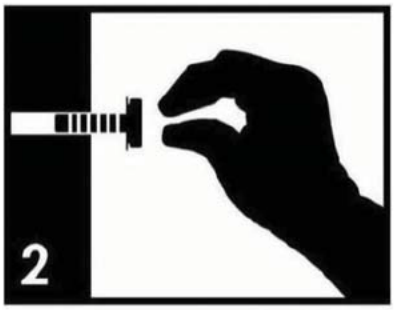

Position each part correctly and insert screws or bolts into their respective holes by hand tighten or using the proper hand tool. Only tighten when step is completed or when instructed to do so.

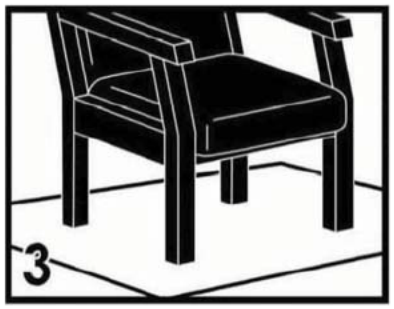

Use cardboard or carpet area when assembling furniture to prevent scratches . Make sure the furniture rests on a flat and level surface with each leg evenly touching the floor.

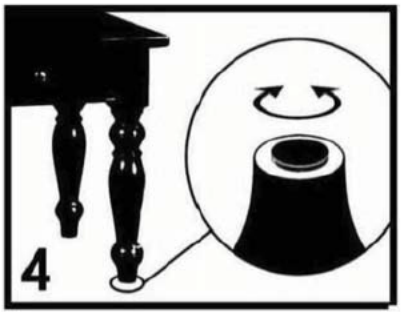

Some furniture comes with height adjusetment knobs underneath each leg. To lower or to raise each leg, you need to turn clockwise or counterclockwise, respectively.

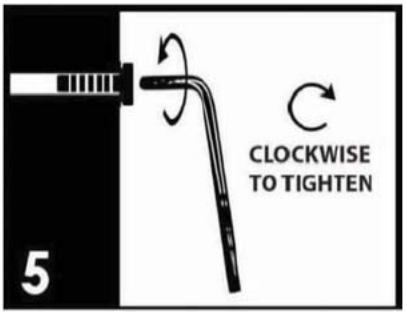

Make sure all parts are properly aligned, then use the appropriate hand tool to completely tighten the bolts or screws. Do not use power tools and do not overtighten.

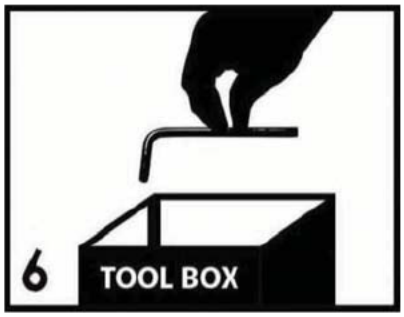

Save the instructions and store the Allen wrench or any supplied tool for later maintenance. After two weeks, check and tighten any loose hardware and repeat again every six months thereafter.

IT IS THE USER'S RESPONSIBILITY TO MAINTAIN THE FURNITURE.THE HARDWARE MAY LOOSEN OVER TIME AND MAY CAUSE THE FURNITURE TO BE WOBBLY AND UNABLE TO SUPPORT ITS INTENDED WEIGHT CAPACITY. THIS MAY LEAD TO COLLAPSE AND MAY CAUSE SERIOUS INJURY.

FAILURE TO FOLLOW THE GUIDELINES ABOVE MAY RESULT IN INJURY AND/OR PROPERTY DAMAGE.



Before you begin, please read Page 2 of "Assembly and Care Advice".

And remember, do not tighten until each step is completed or instructed.

Parts List



#1 x 2pcs
Table Leg



#2 x 1pc
Table Top



#3 x 1pc
Support Panel



#4 x 2pcs
Wine Rack



#5 x 2pcs
Glass Holder

Hardware List



#A x 14pcs
Bolt 1/4"X5/8"



#B x 4pcs
Bolt 1/4"X1/2"



#C x 8pcs
Bolt 1/4"X1-5/8"



#D x 1pc
Allen Wrench



#A x 8pcs

1. Place the top panel (#2) face down onto a protected surface, then align the legs (#1) to the holes along the corners.

2. Insert 2 bolts (#A) into each corner and secure using the Allen wrench.

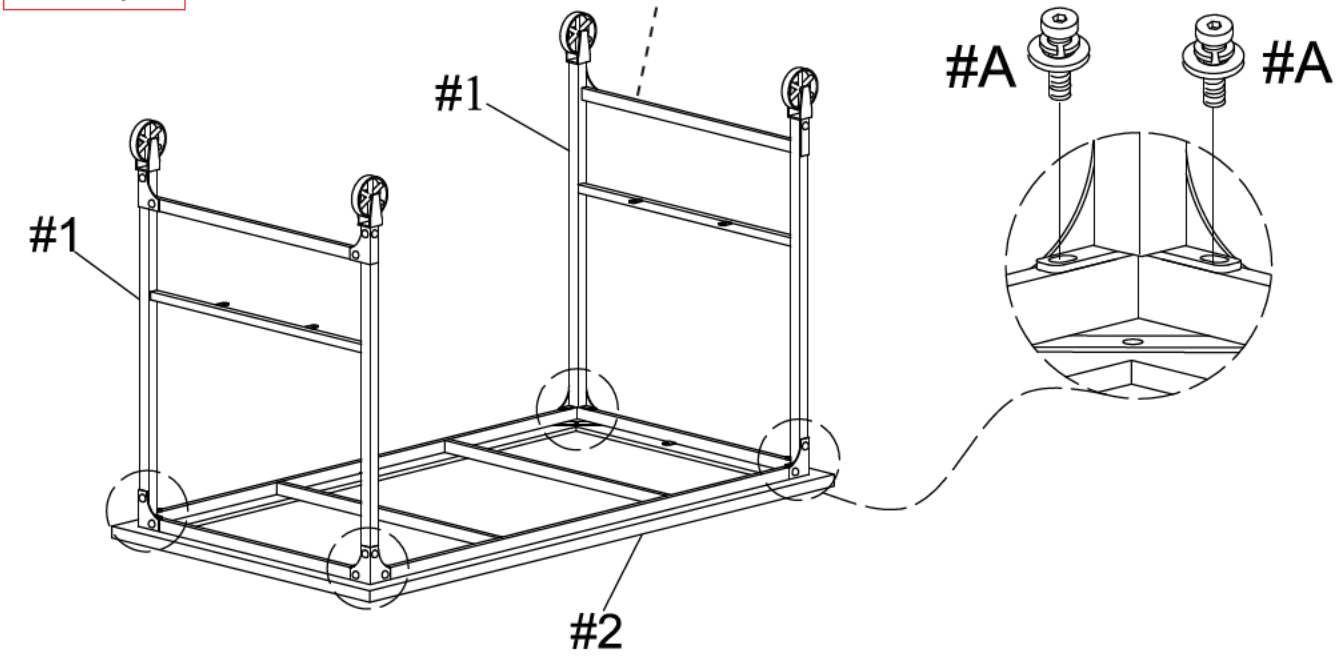



#A x 4pcs

Align the support panel (#3) face down to the holes along the legs (#1). Insert a bolt (#A) into each corner, then secure using the Allen wrench.



#C x 8pcs

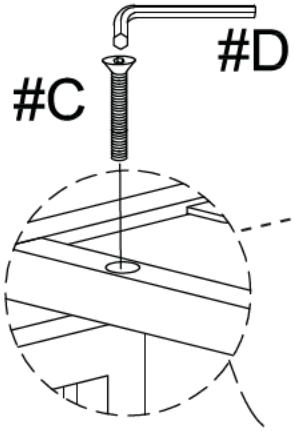

Align the wine rack (#4) to the holes along the support panel (#3) and top panel (#2). Insert a bolt (#C) into each hole, then secure using the Allen wrench.

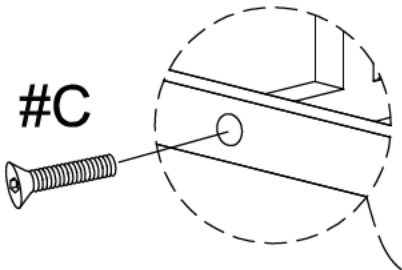

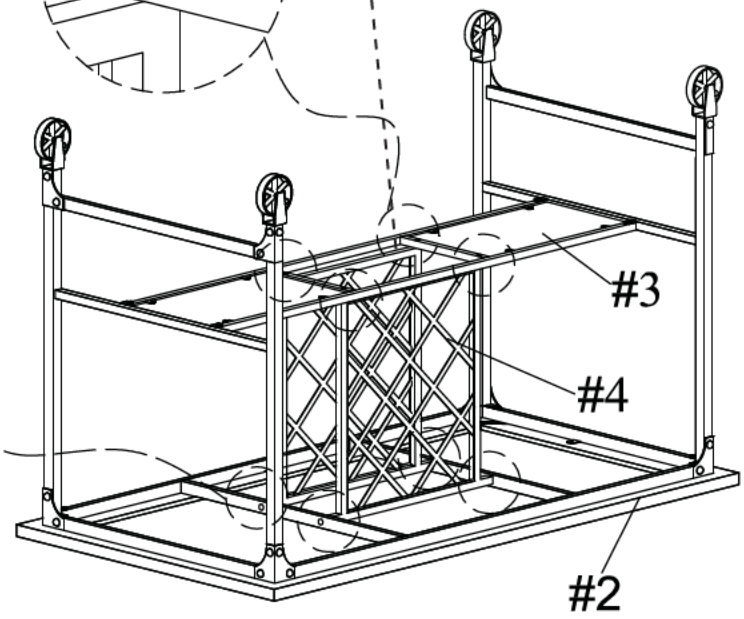



#A x 2pcs
#B x 4pcs

1. Align the glass holder (#5) to the holes, then insert bolts (#B) into the outer holes. Secure using the Allen wrench (#D).

2. Insert bolts (#A) into the inner holes. Secure using the Allen wrench (#D).

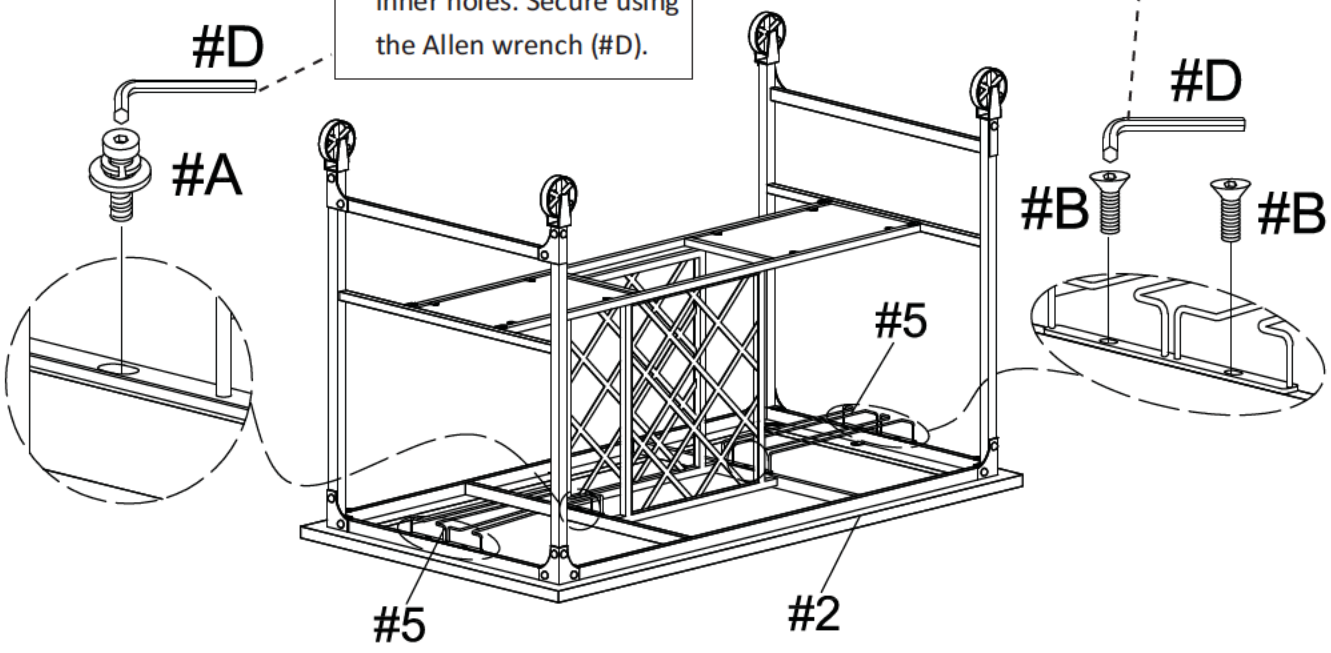

ASSEMBLY IS COMPLETED