ASSEMBLY INSTRUCTIONS

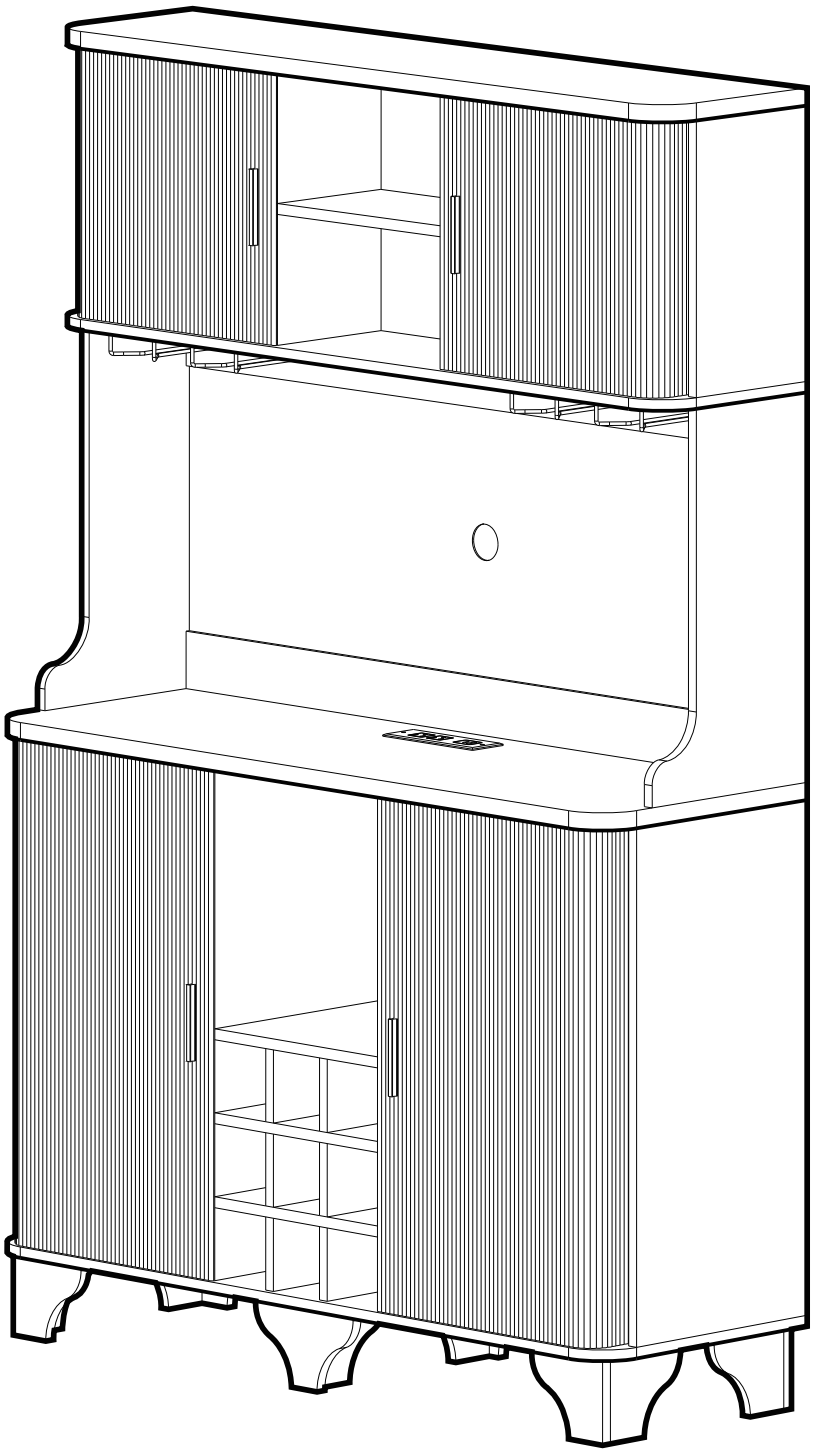

Warning	Flammable, please keep away from open flames!
Warnung	Entflammbar, bitte von offenen Flammen fernhalten!
Attention	inflammable, veuillez tenir à l'écart des flammes nues !
Attenzione	infiammabile, tenere lontano da fiamme libere!
Advertencia	Inflamable, mantener alejado de fuego!
Waarschuwing	Ontvlambaar, uit de buurt van open vuur houden!
Ostrzeżenie	Produkt Łatwopalny, trzymać z dala od otwartego ognia!





⚠ WARNING

Children have died from furniture tipover. To reduce the risk of furniture tipover:

- ALWAYS install Anti-tip device provided.
- NEVER put a TV on this product.
- NEVER allow children to stand, climb or hang on drawers, doors, or shelves.
- NEVER open more than one drawer at a time.
- Place heaviest items in the lowest drawer.

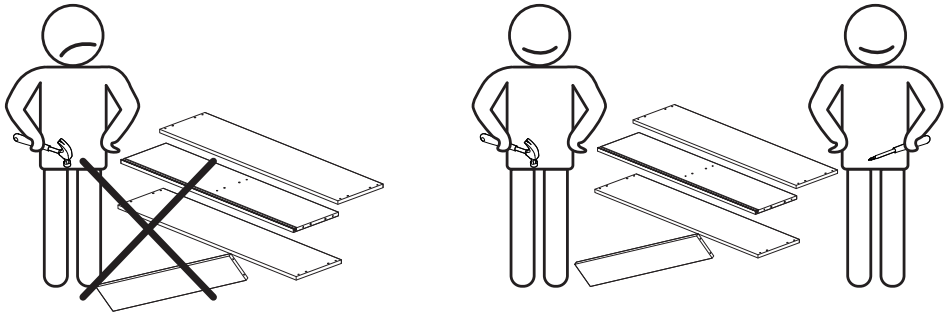

We recommend at least 2 people for the assembly.

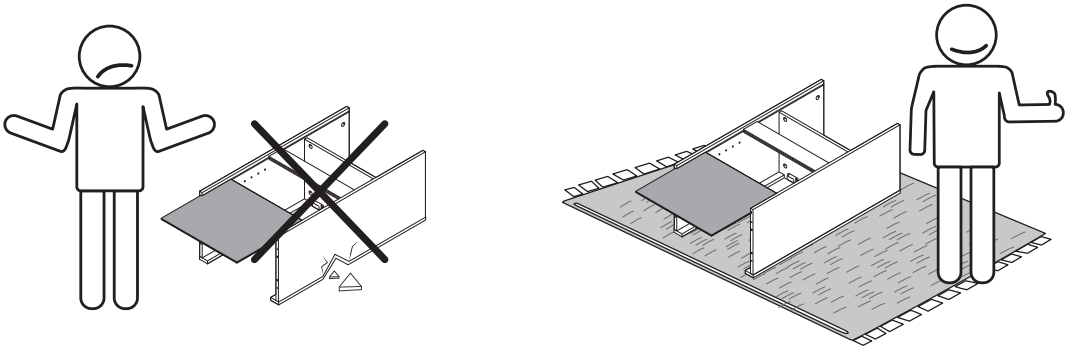

To prevent any damage during assembly, place a mat under the pieces.



PARTS DIAGRAM

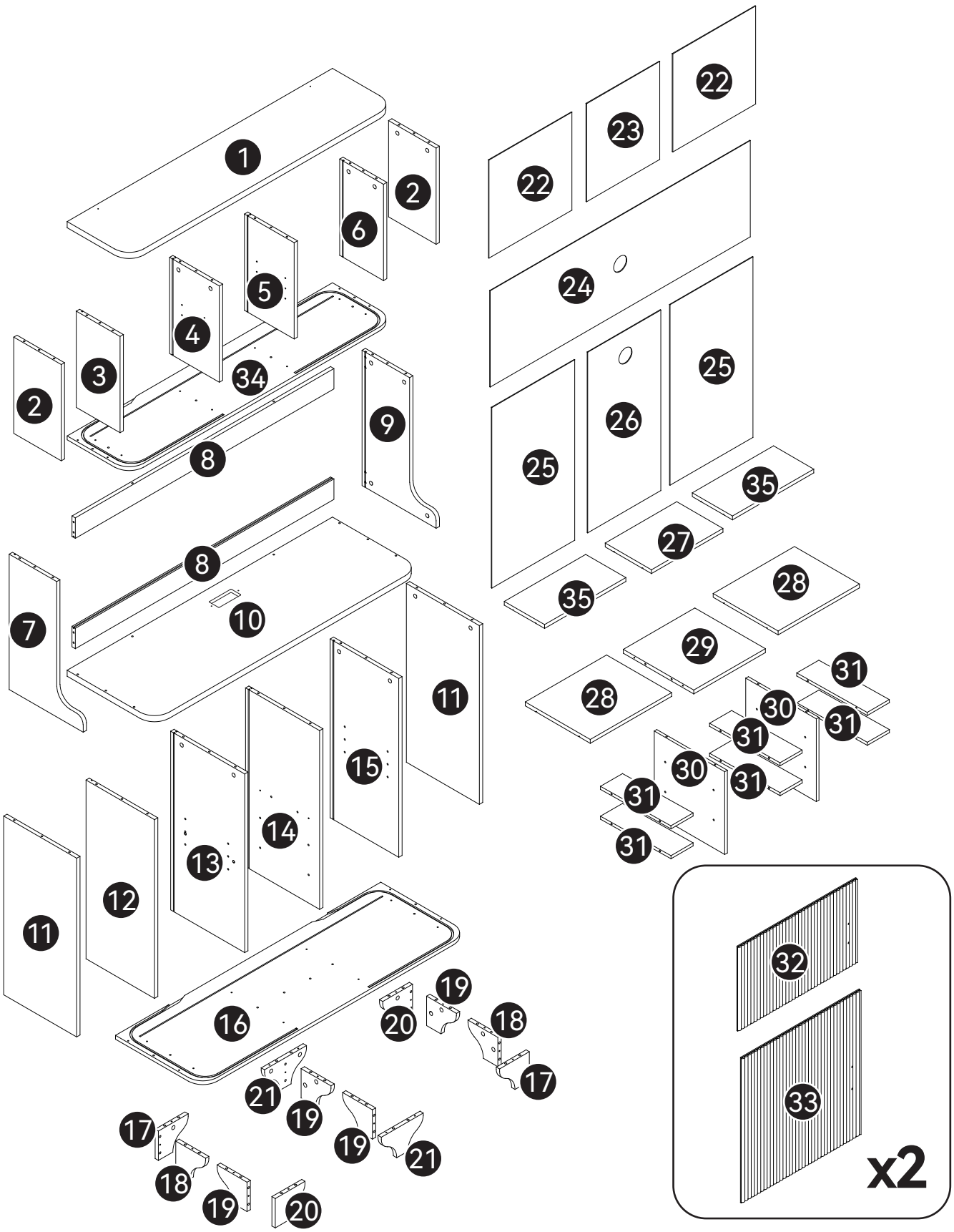

PARTS LIST

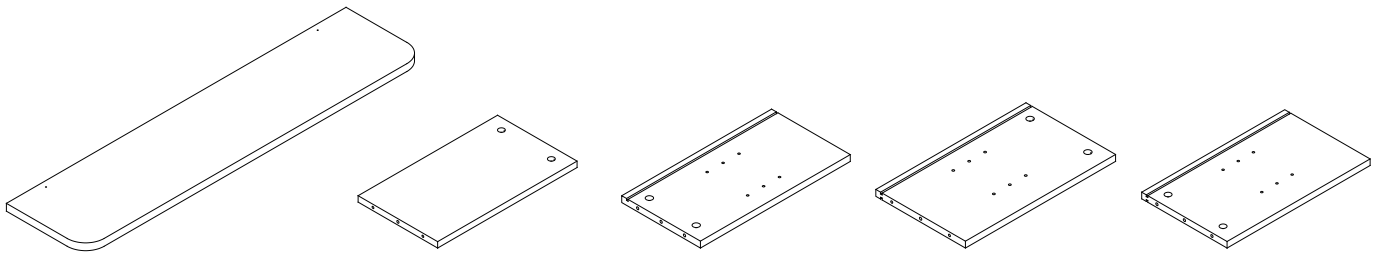

❶ x 1 ❷ x 2 ❸ x 1 ❹ x 1 ❺ x 1

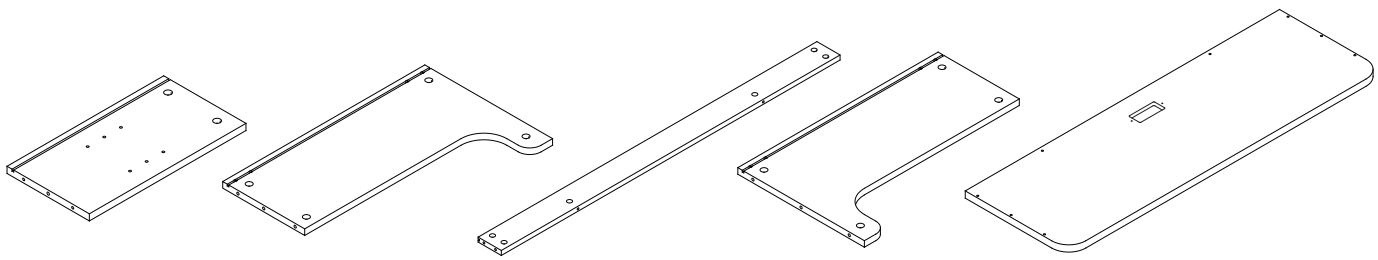

❻ x 1 ❼ x 1 ❽ x 2 ❾ x 1 ❿ x 1

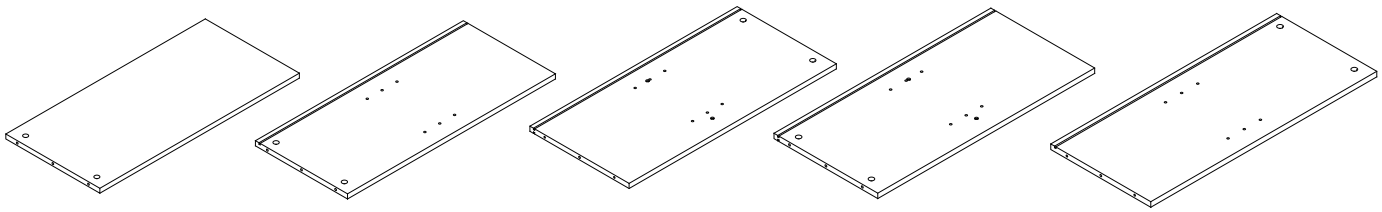

⓫ x2 ⓬ x 1 ⓭ x 1 ⓮ x 1 ⓯ x 1

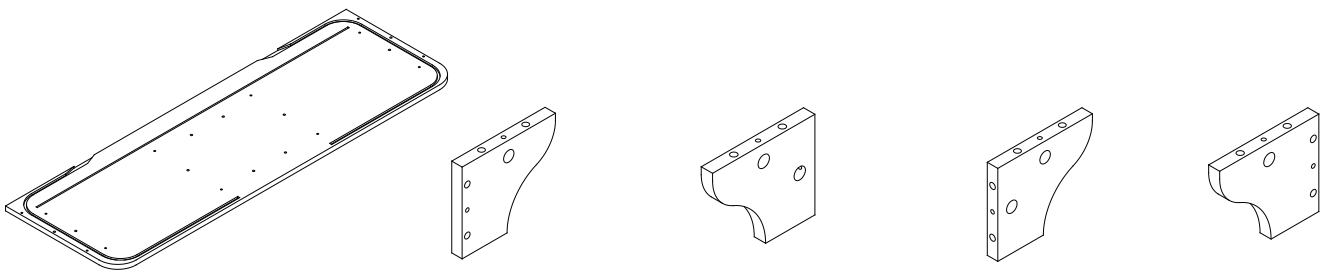

⓰ x 1 ⓱ x 2 ⓲ x 2 ⓳ x 4 ⓴ x 2

PARTS LIST

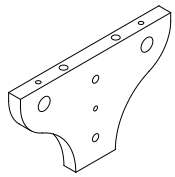

21 x 2

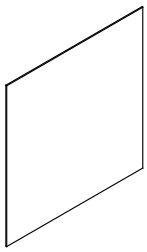

22 x 2

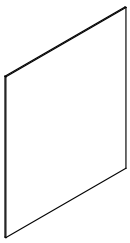

23 x 1

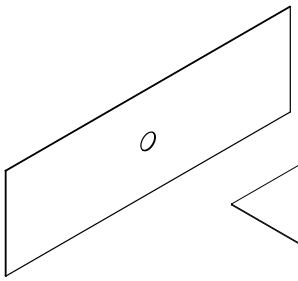

24 x 1

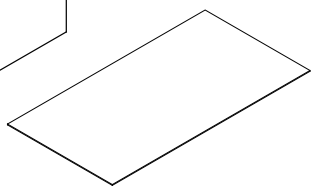

25 x 2

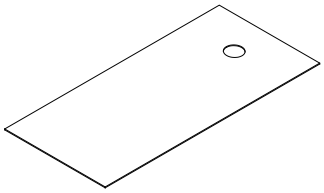

26 x 1

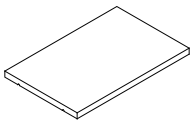

27 x 1

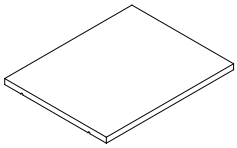

28 x 2

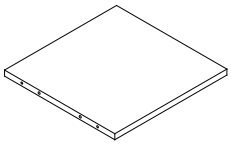

29 x 1

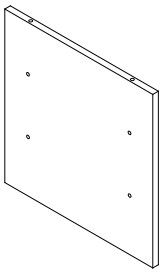

30 x 2

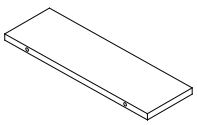

31 x 6

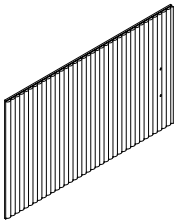

32 x 2

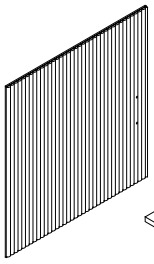

33 x 2

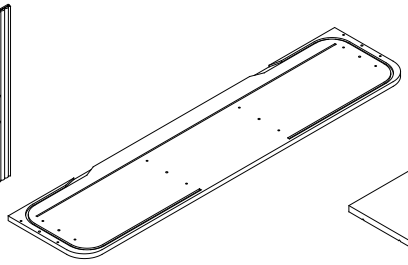

34 x 1

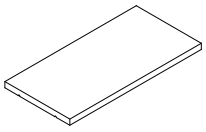

35 x 2

HARDWARES

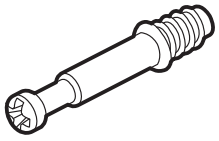

Ø6x35mm

A x 64



Ø15x10mm

B x 64

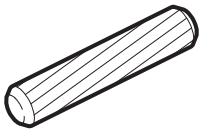

Ø6x30mm

C x 82

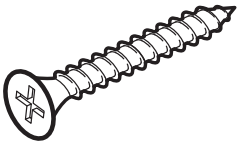

Ø4x40mm

D x 28



Ø4x14mm

E x 8



F x 32

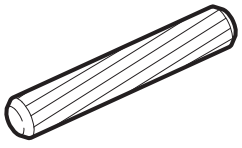

G x 8

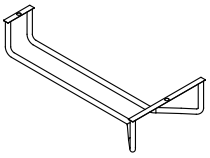

H x 4

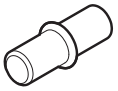

I x 20

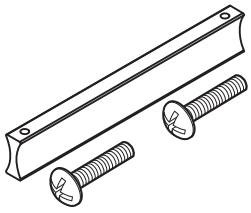

J x 4

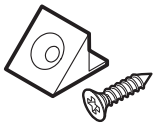

K x 32

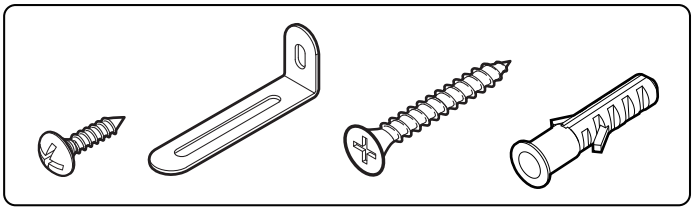

L x 2

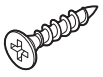

Ø3.5x12mm

M x 2

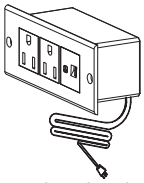

The product comes with a plug that varies by market.
The one actually received shall in kind prevail.

N x 1

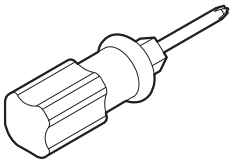

O x 1

SPARE PARTS

The spare parts are the additional parts provided in case of missing or damaged ones. Keep the spare parts and tools for future use.

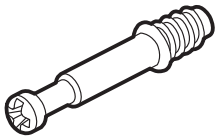

Ø6x35mm

A x 6



Ø15x10mm

B x 6

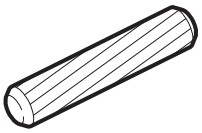

Ø6x30mm

C x 8

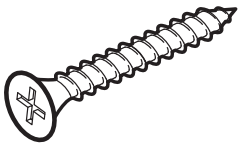

Ø4x40mm

D x 2



F x 3

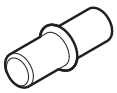

I x 2

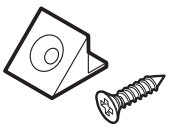

K x 3

CAM LOCK FASTEN SYSTEM

⚠ Insert the cam bolt into the hole, then insert the cam lock and tighten.

1

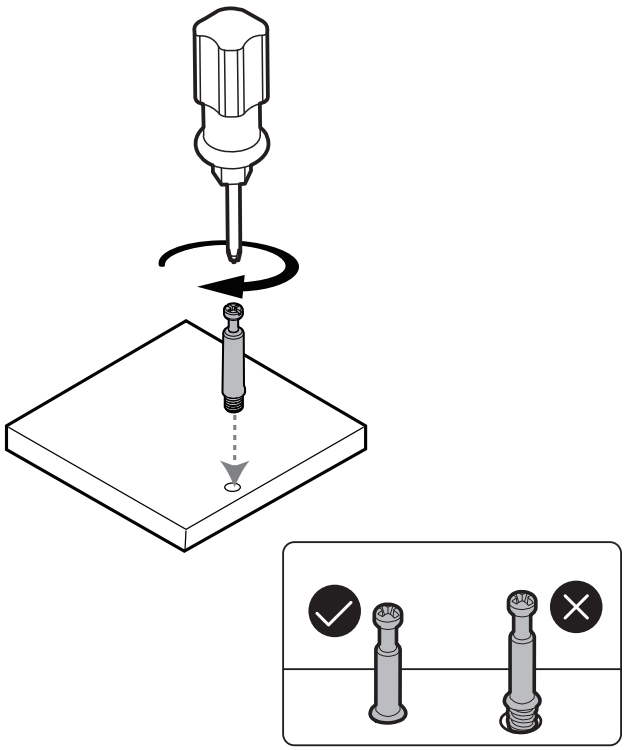

2

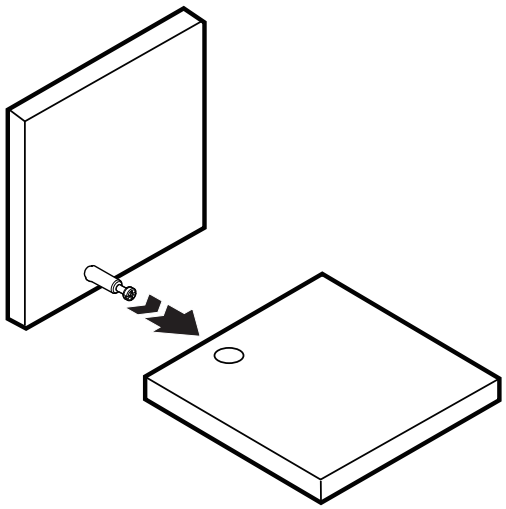

3

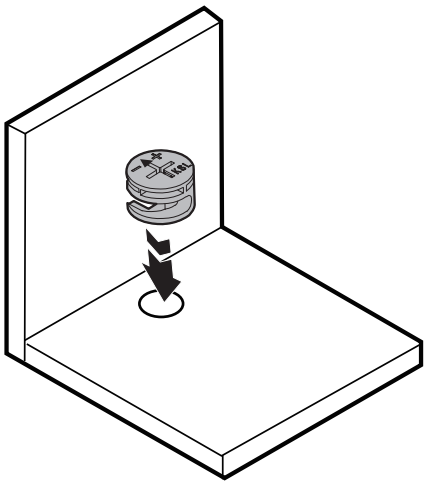



Point the opening towards the edge of the board.

4

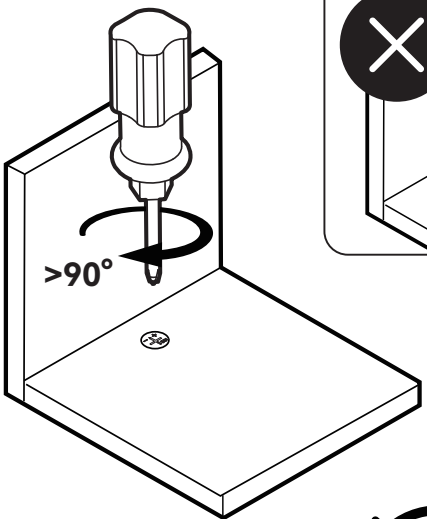

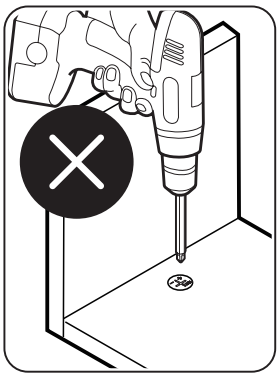

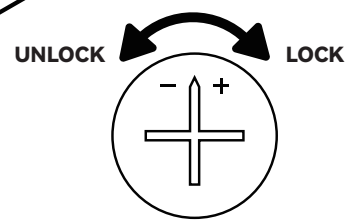

ASSEMBLY

1

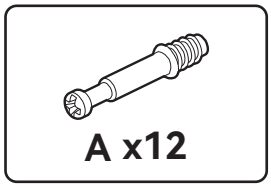

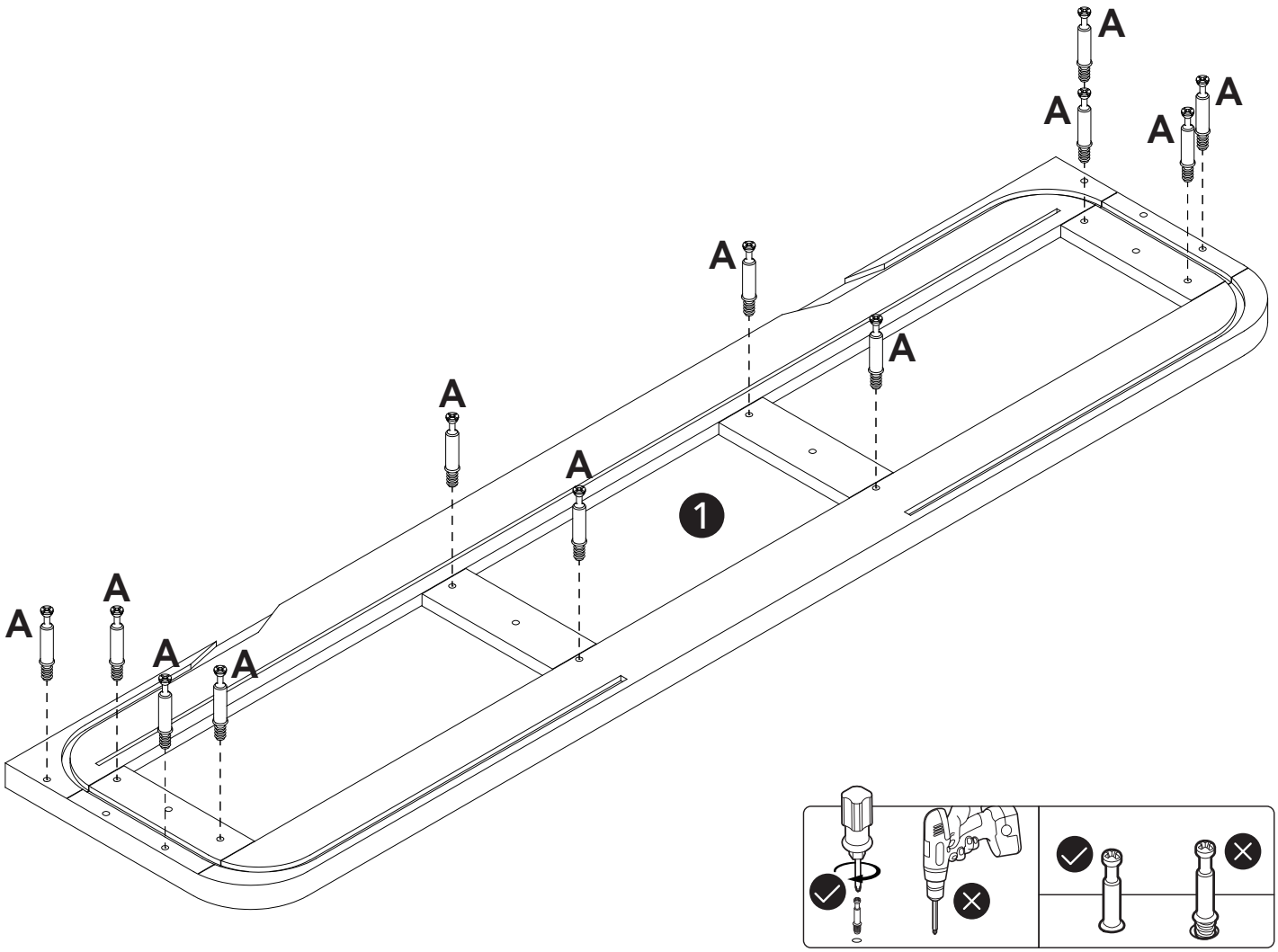

2

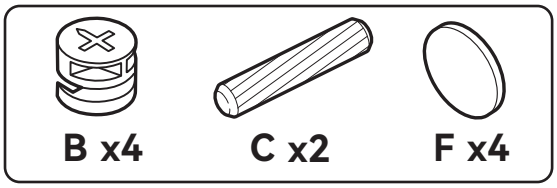

3

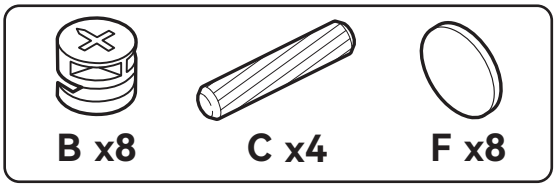

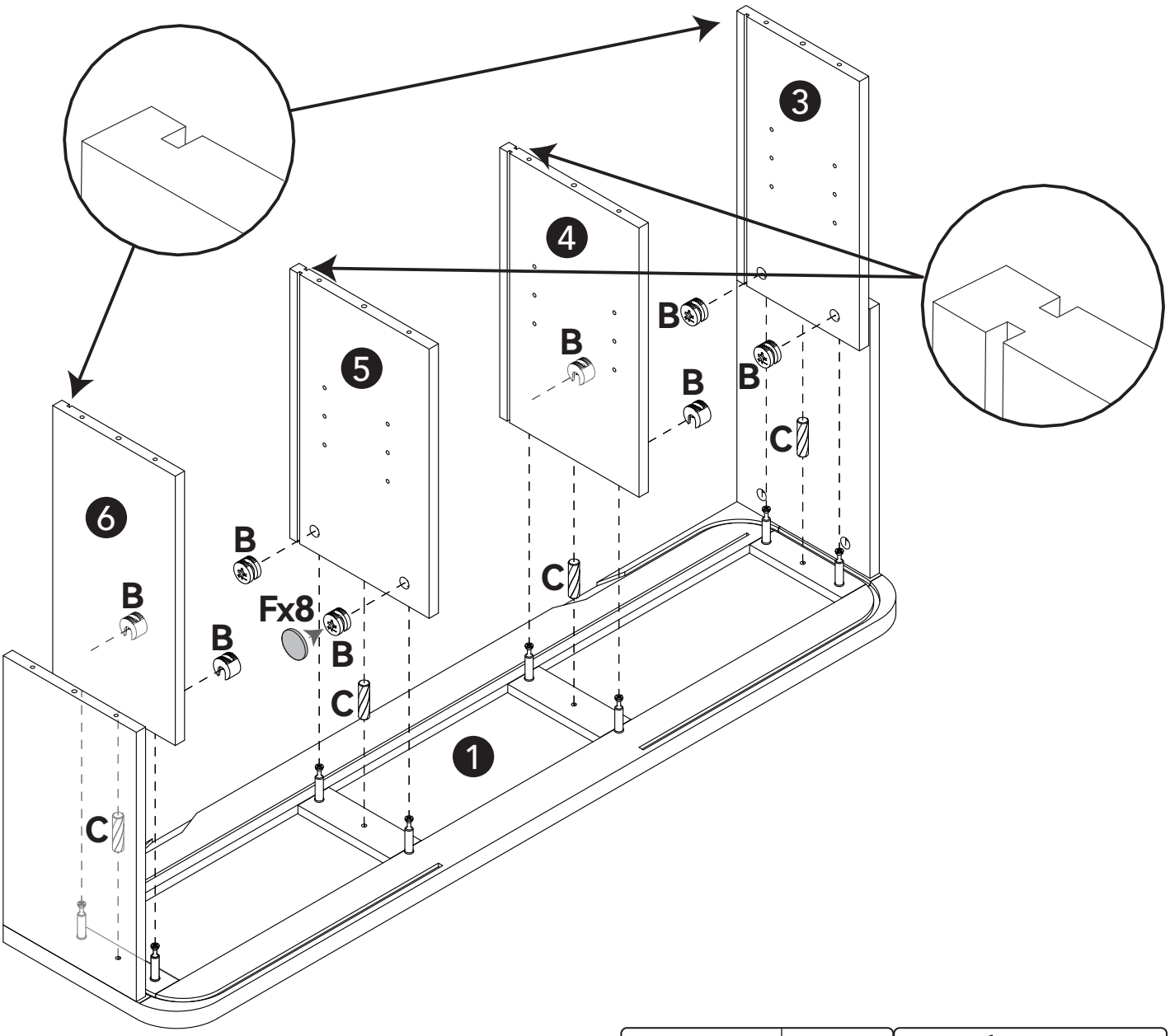

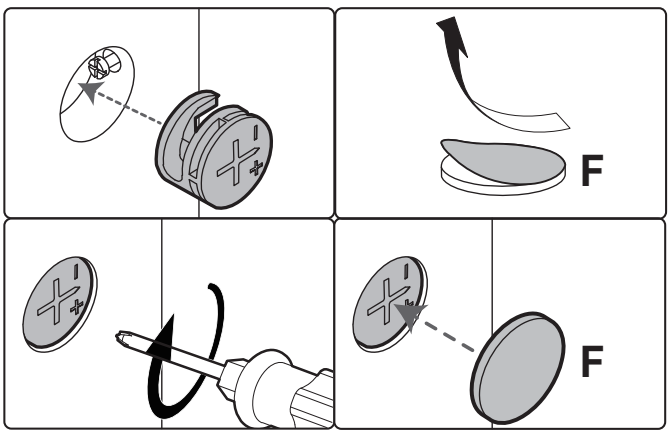

4

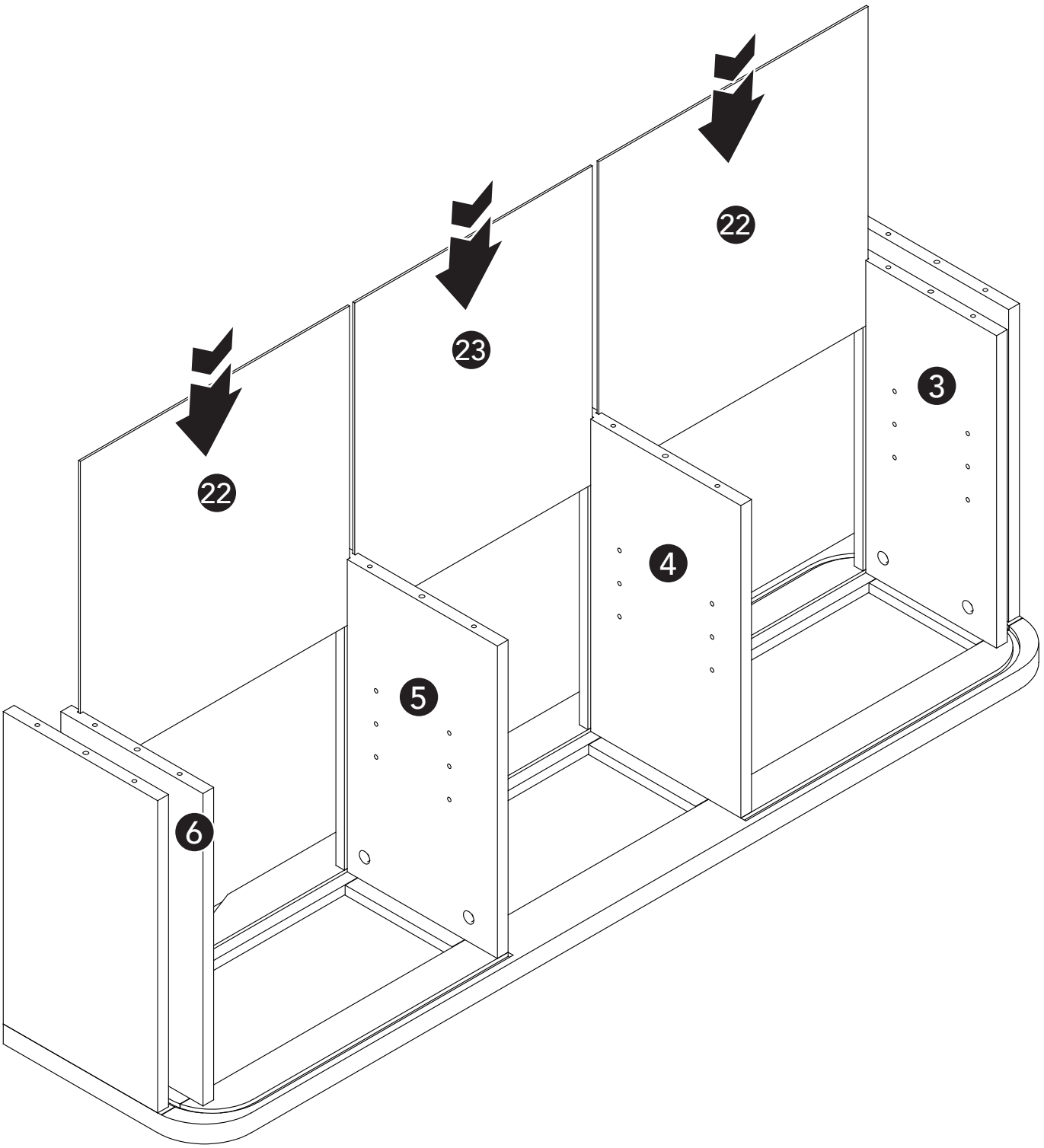

5

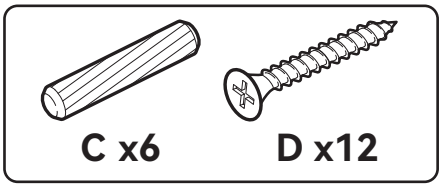

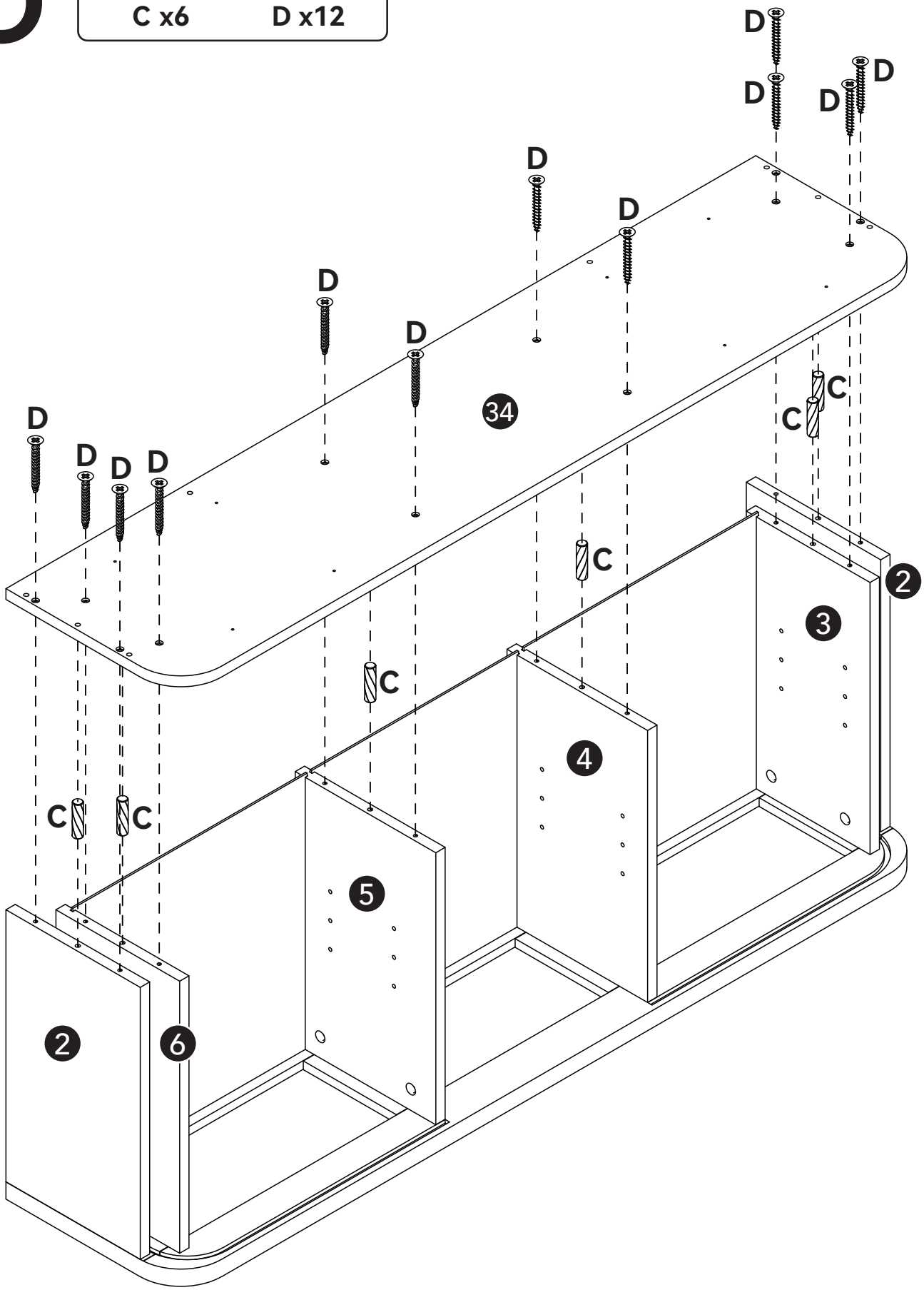

6

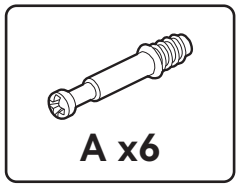

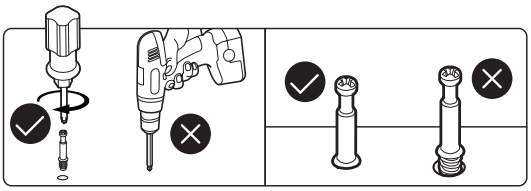

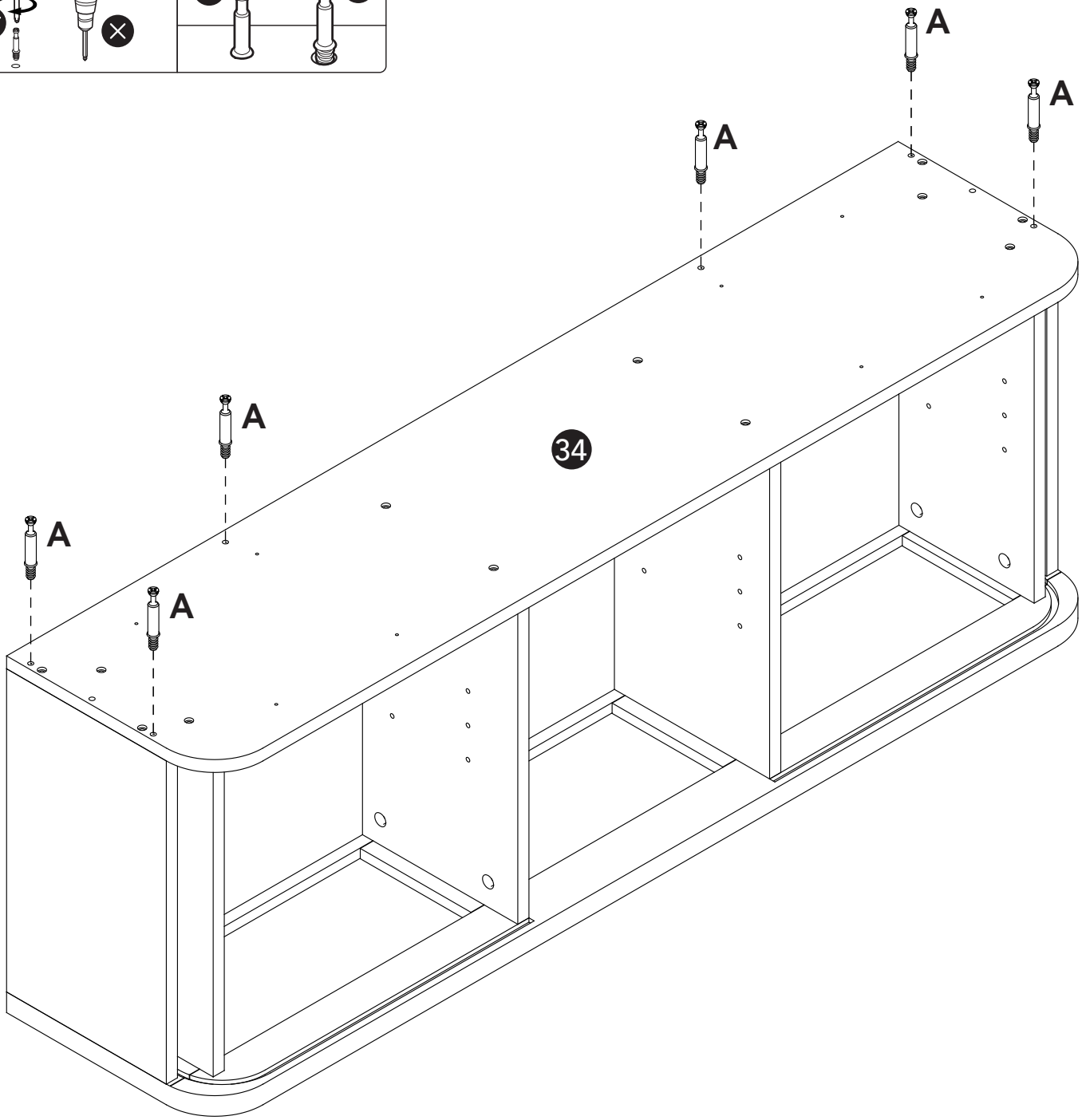

7

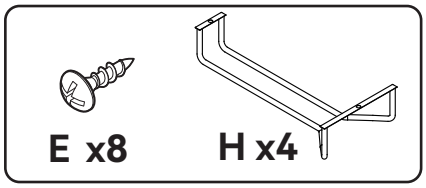

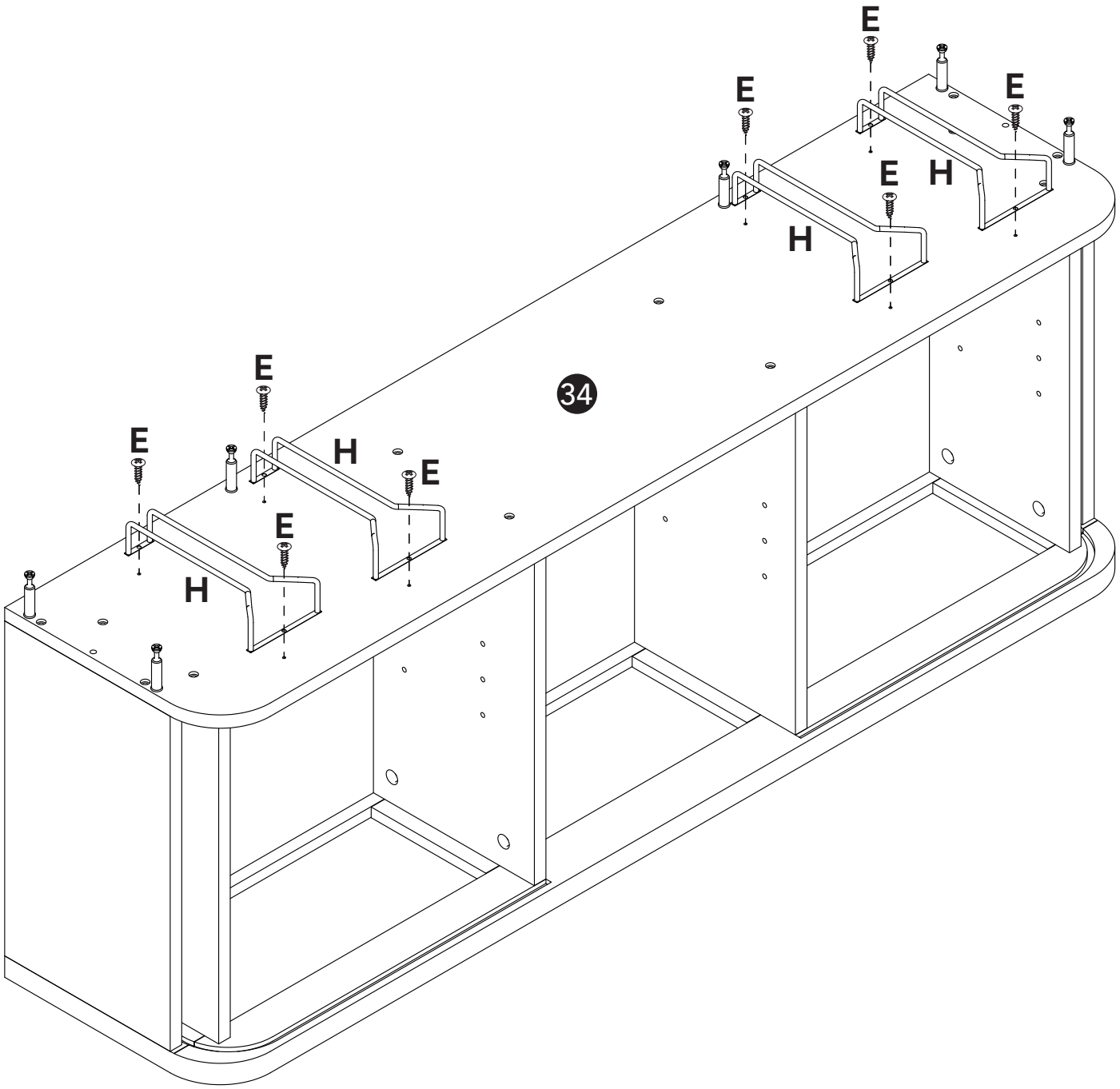

8

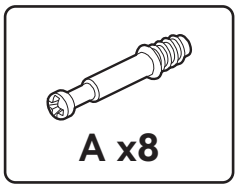

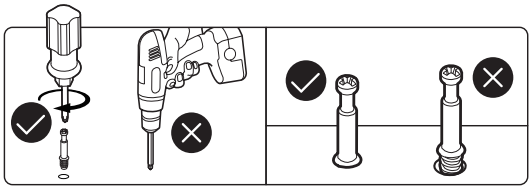

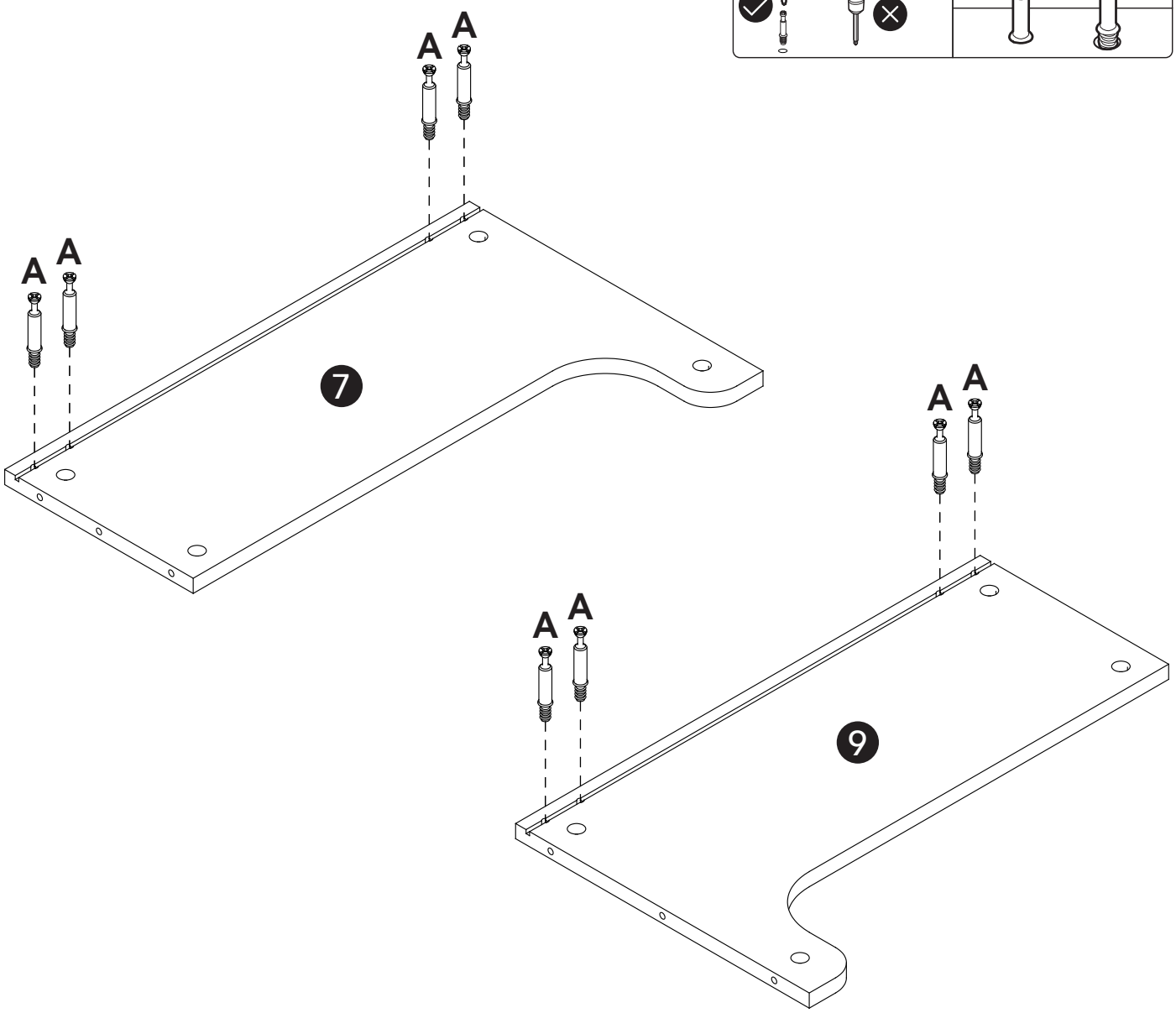

9

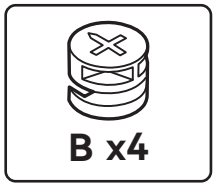

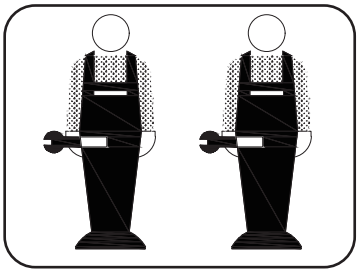

Two people are required for this step.

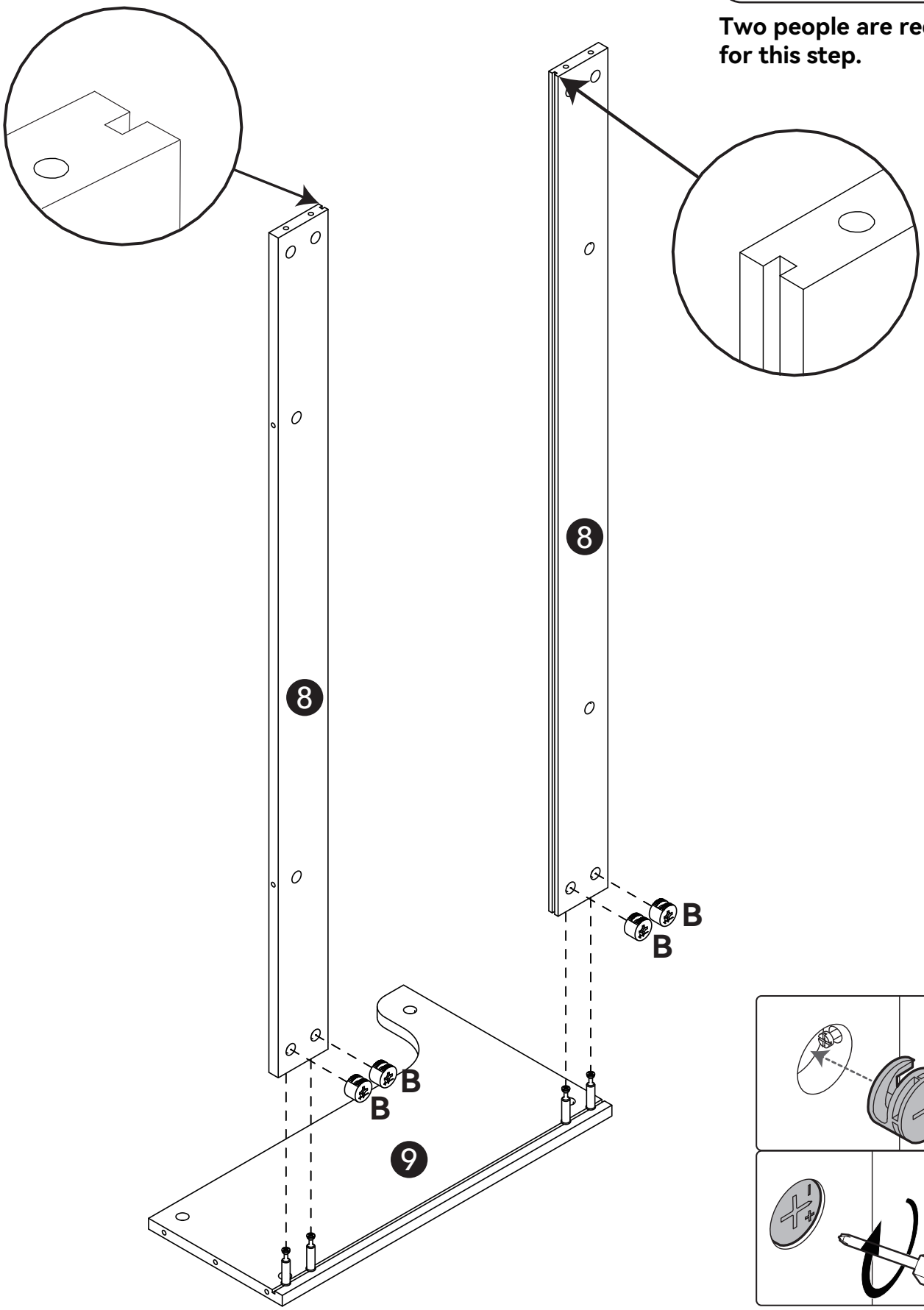

10

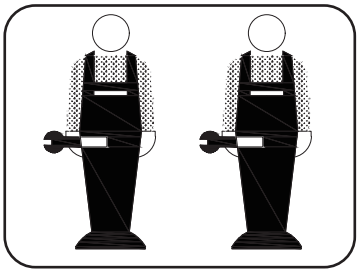

Two people are required for this step.

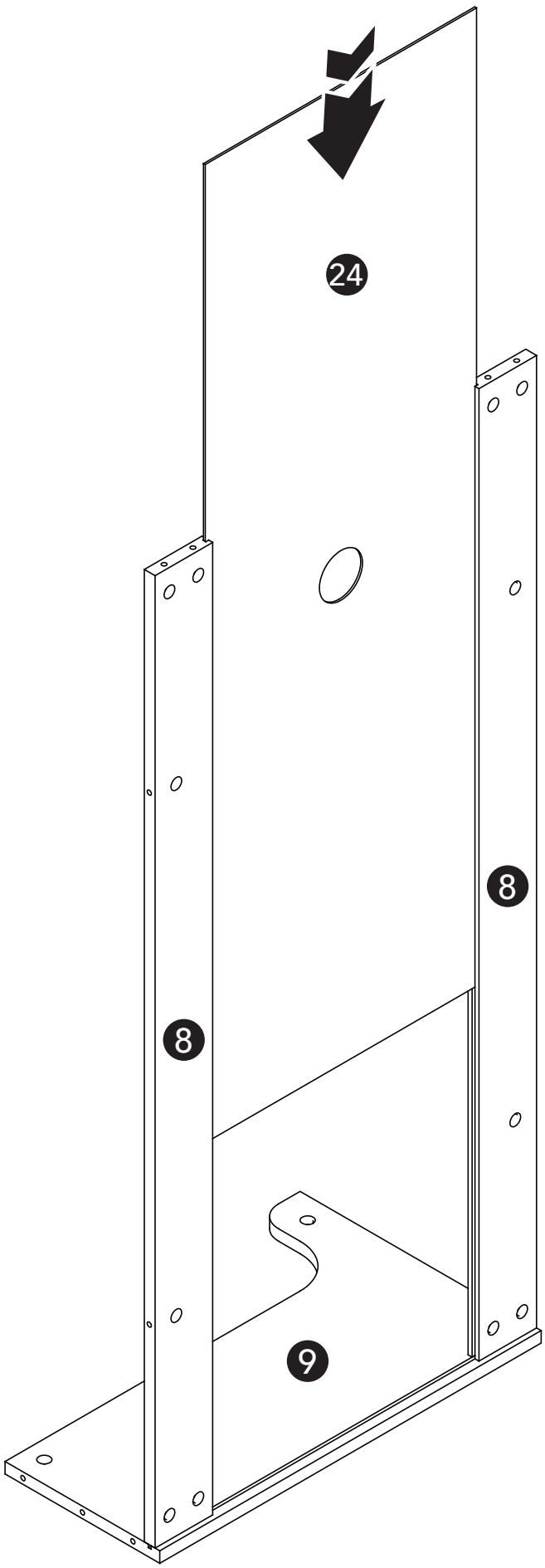

11

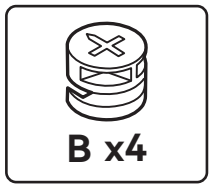

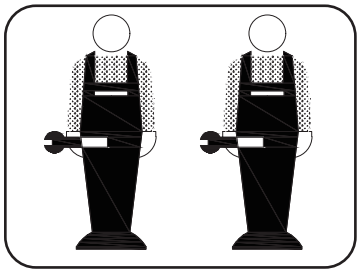

Two people are required for this step.

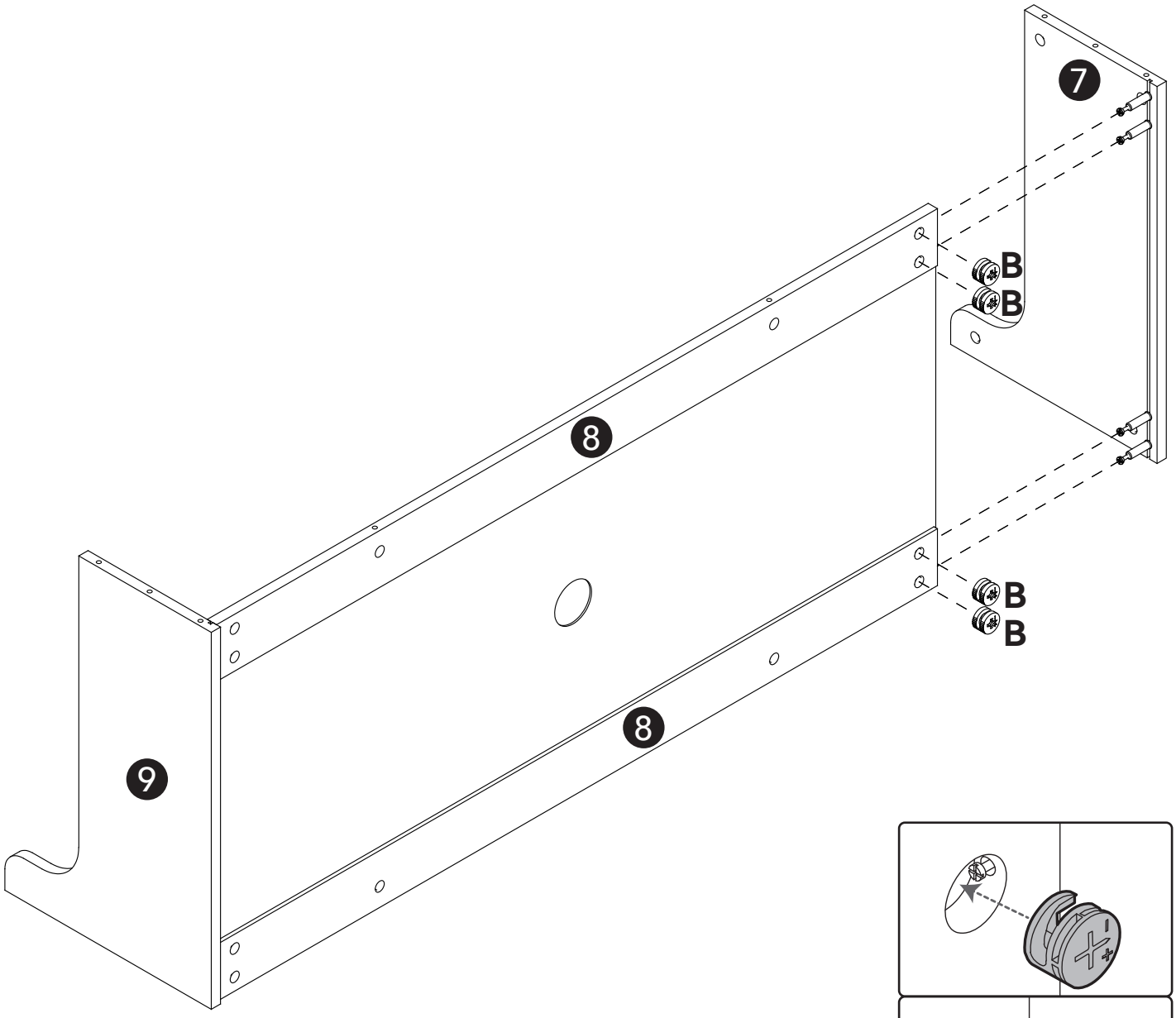

12

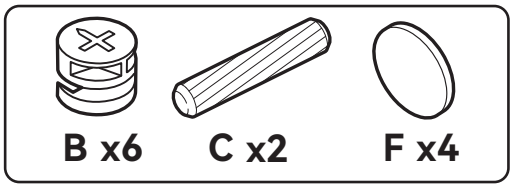

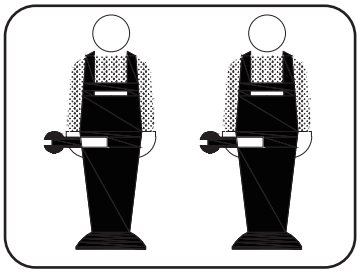

Two people are required for this step.

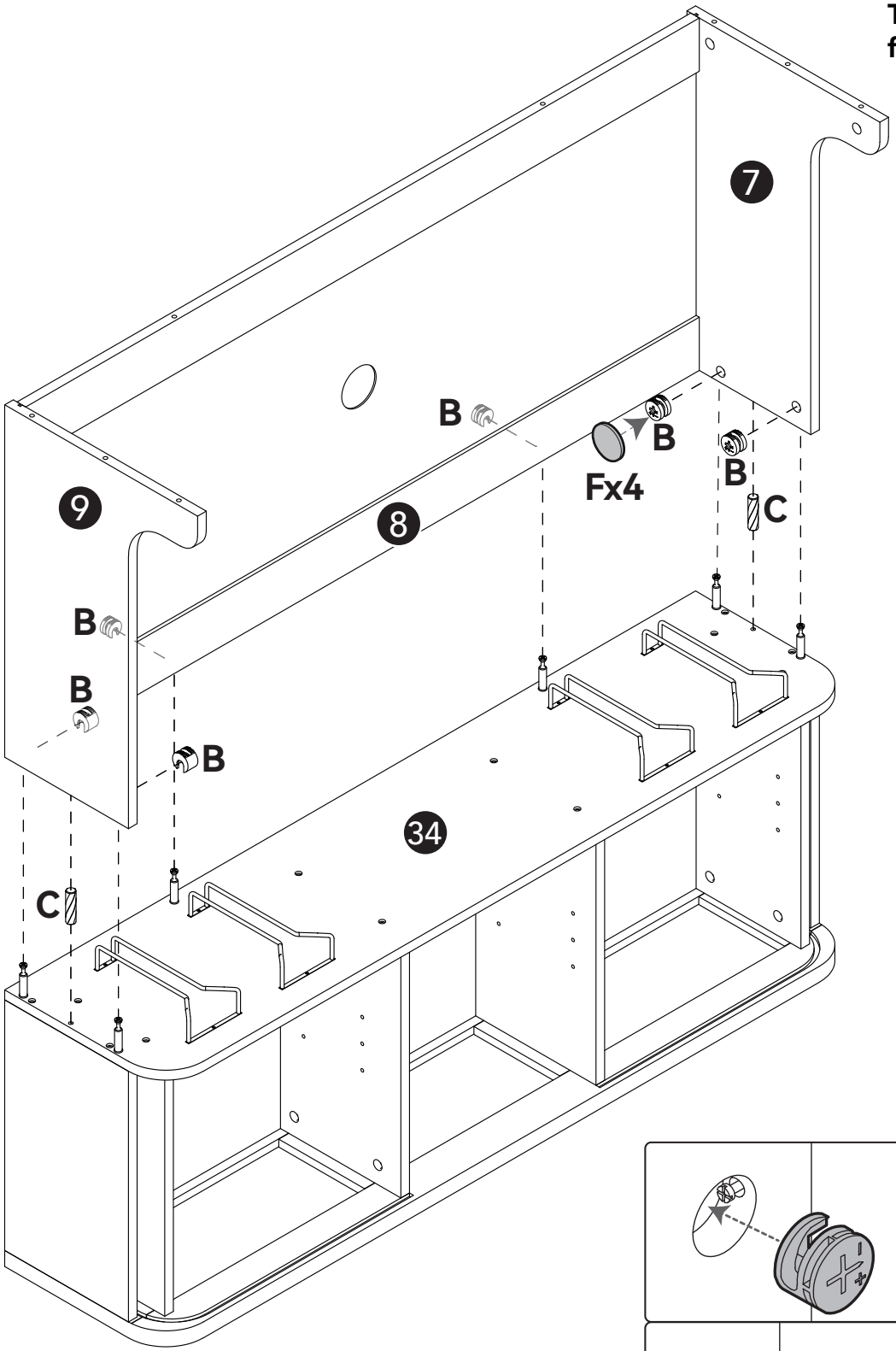

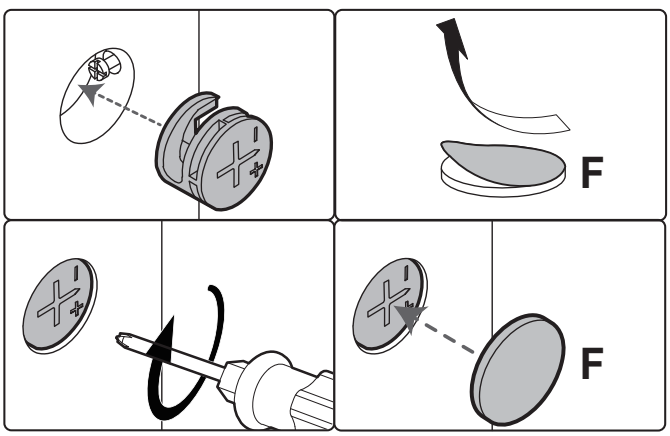

13

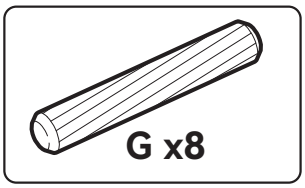



Install with the warning label facing up.

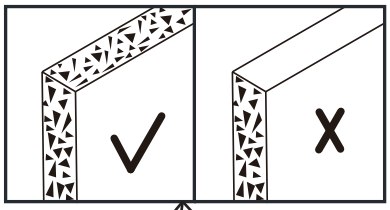

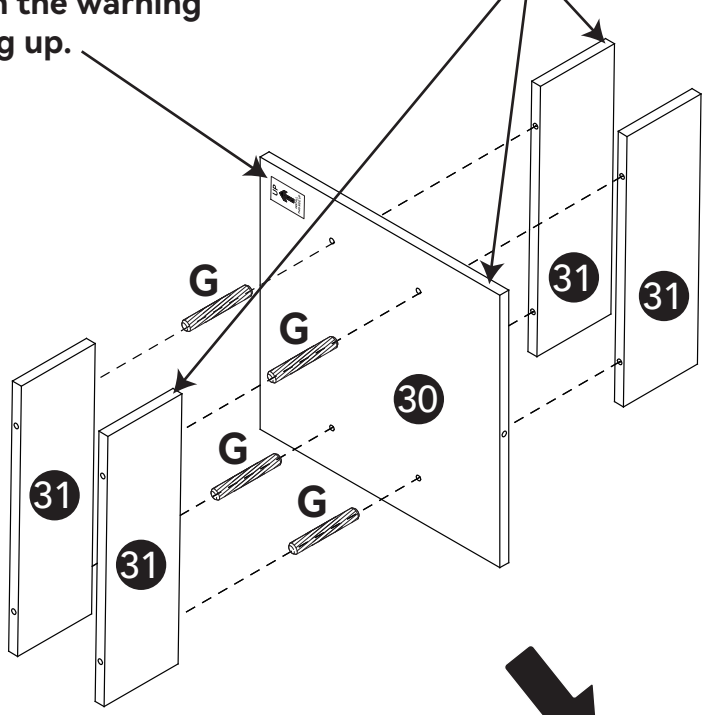

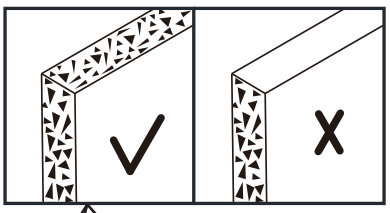

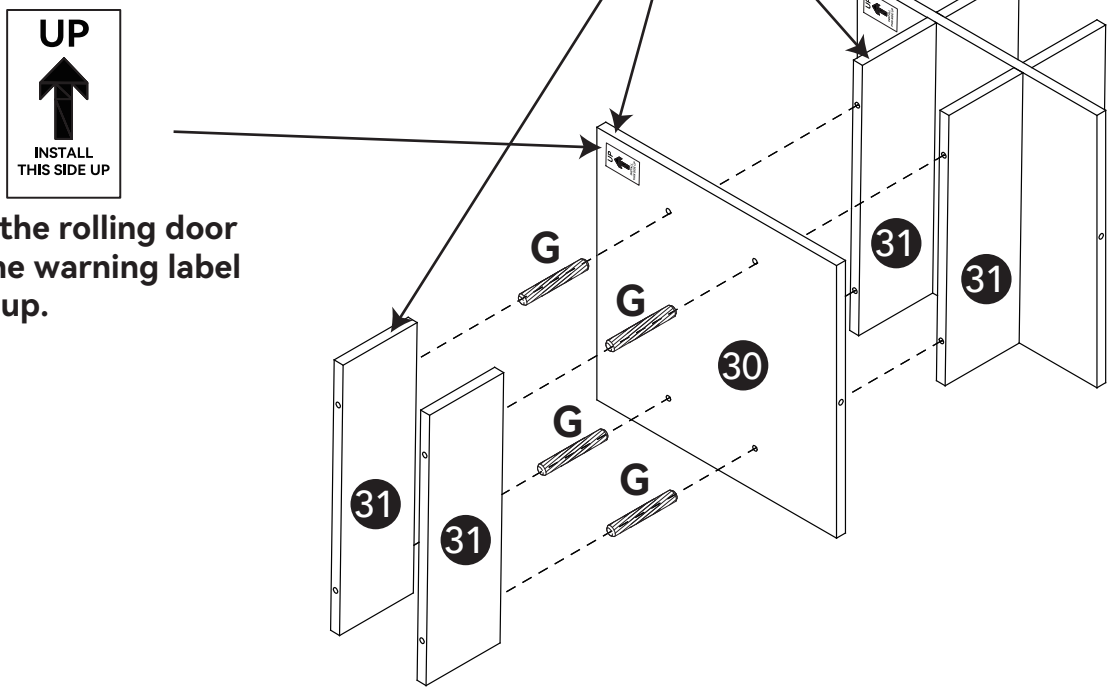

Install the rolling door with the warning label facing up.

14

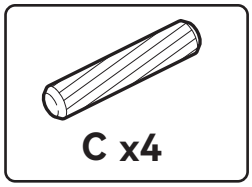



Install with the warning label facing up.

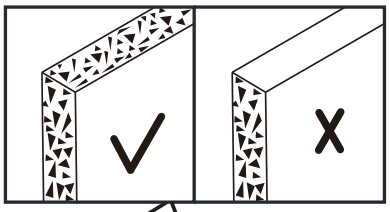

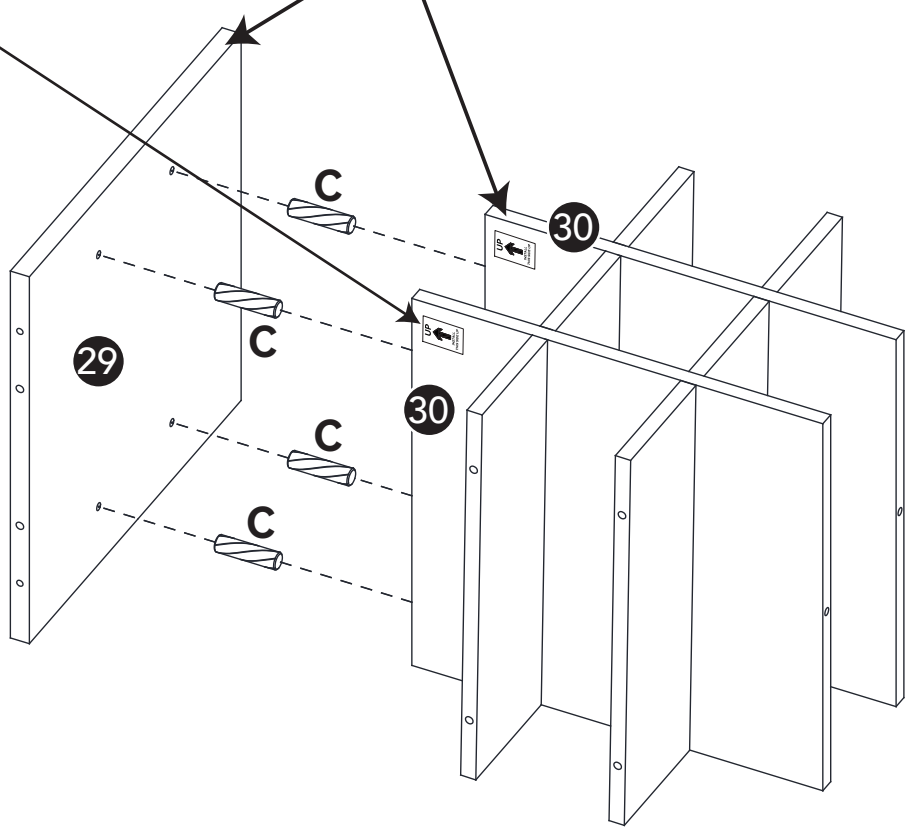

15

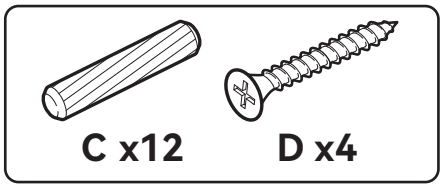

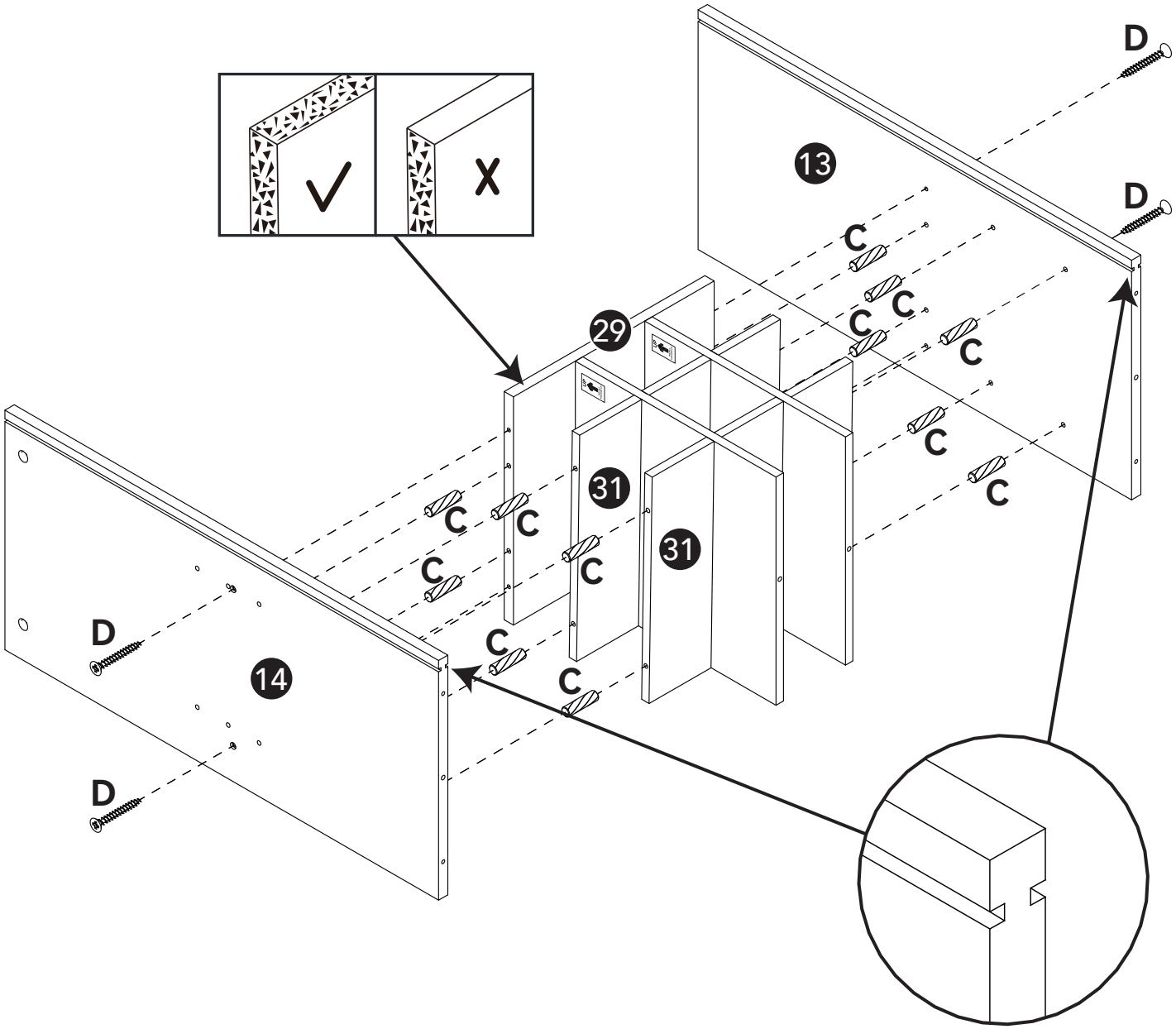

16

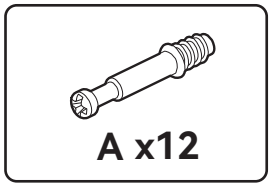

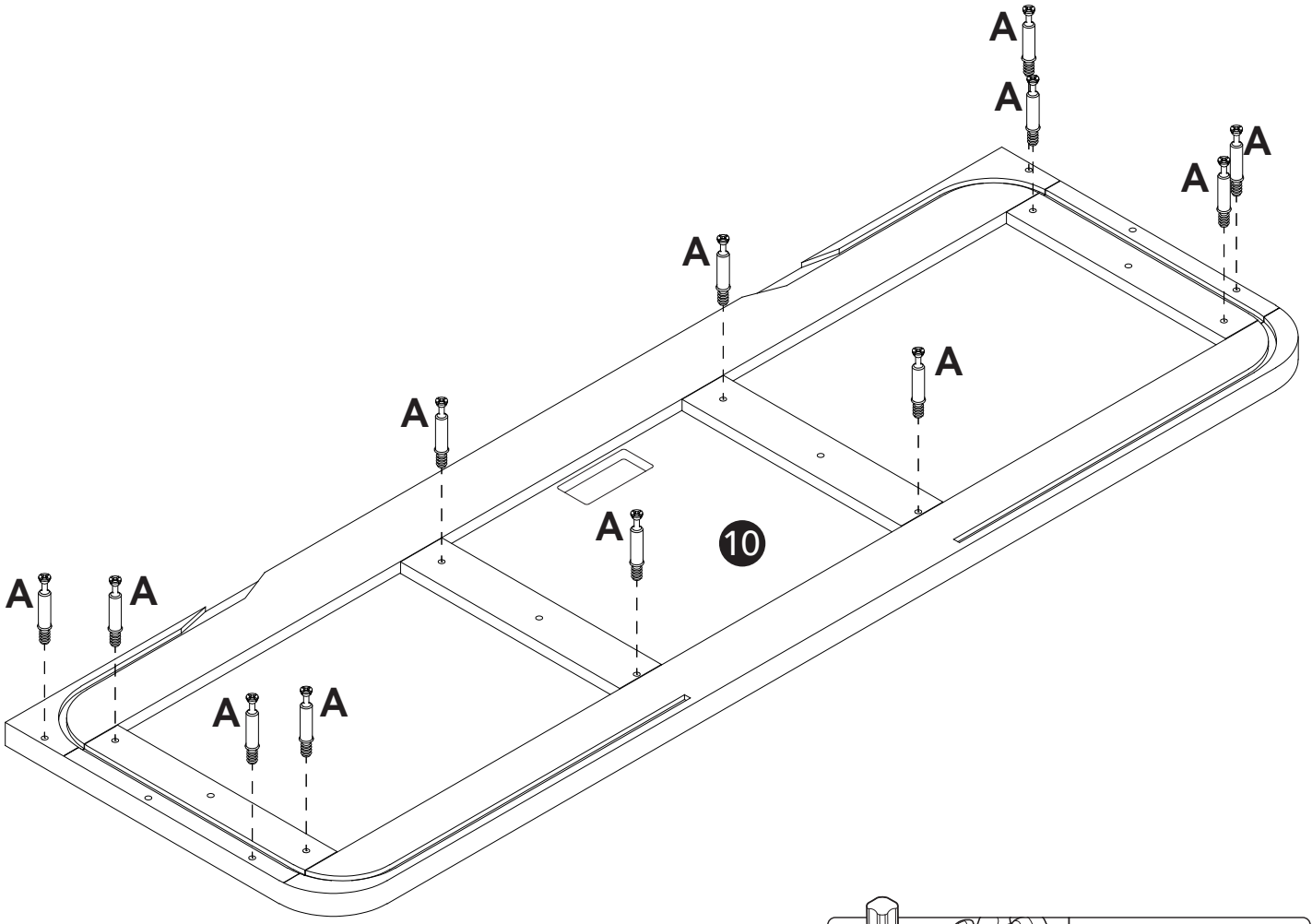

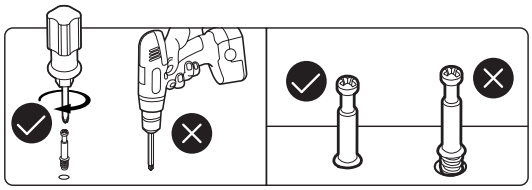

17

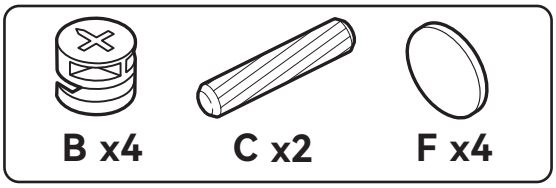

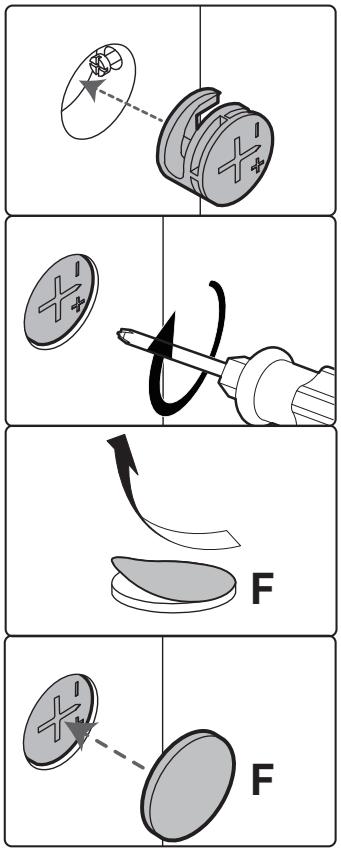

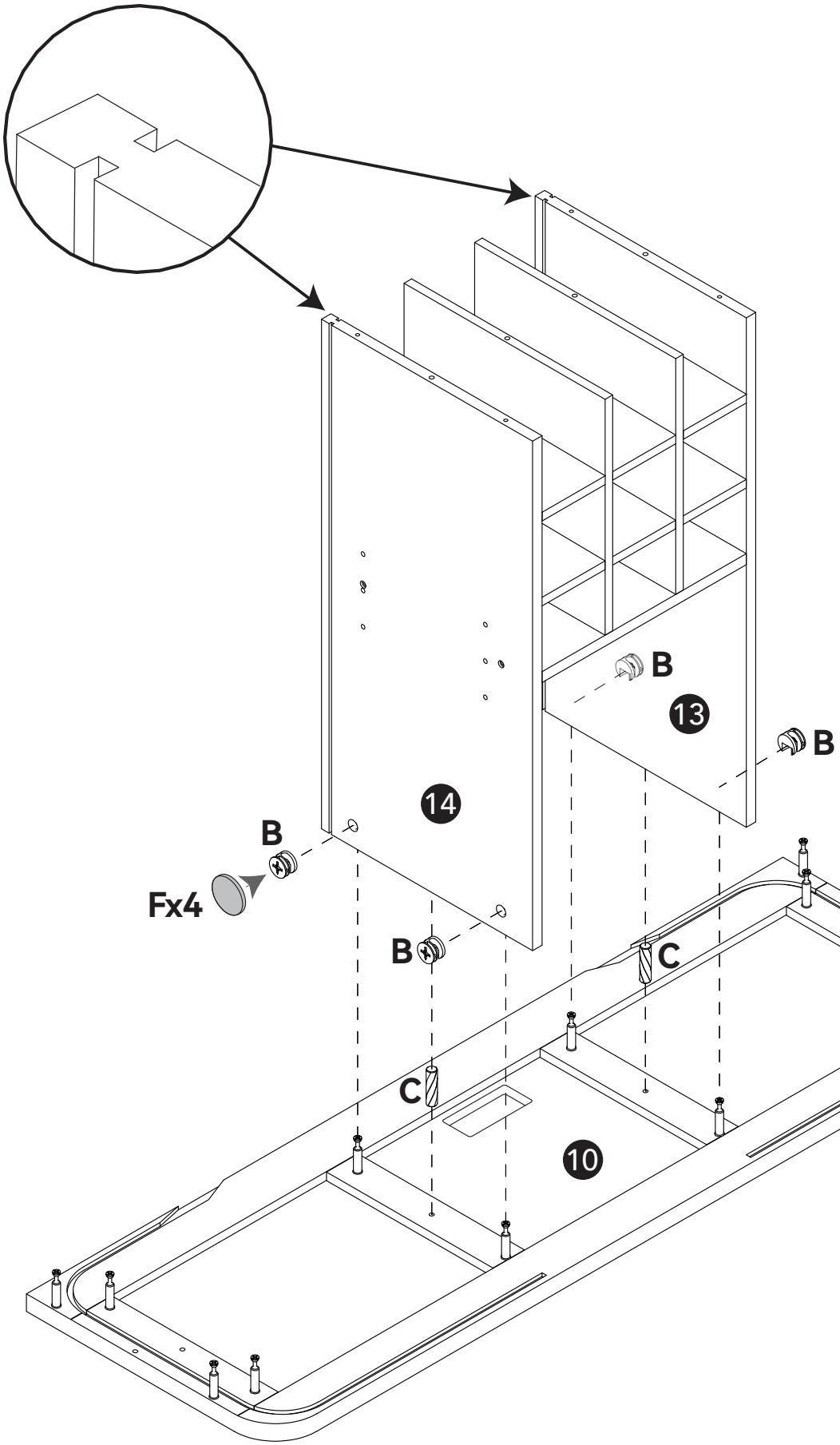

18

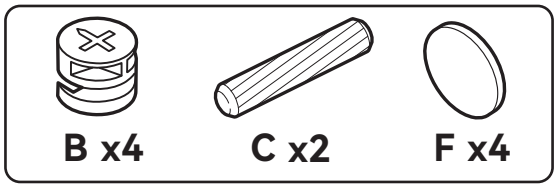

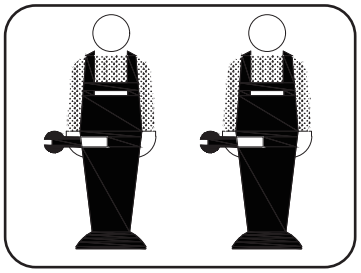

Two people are required for this step.

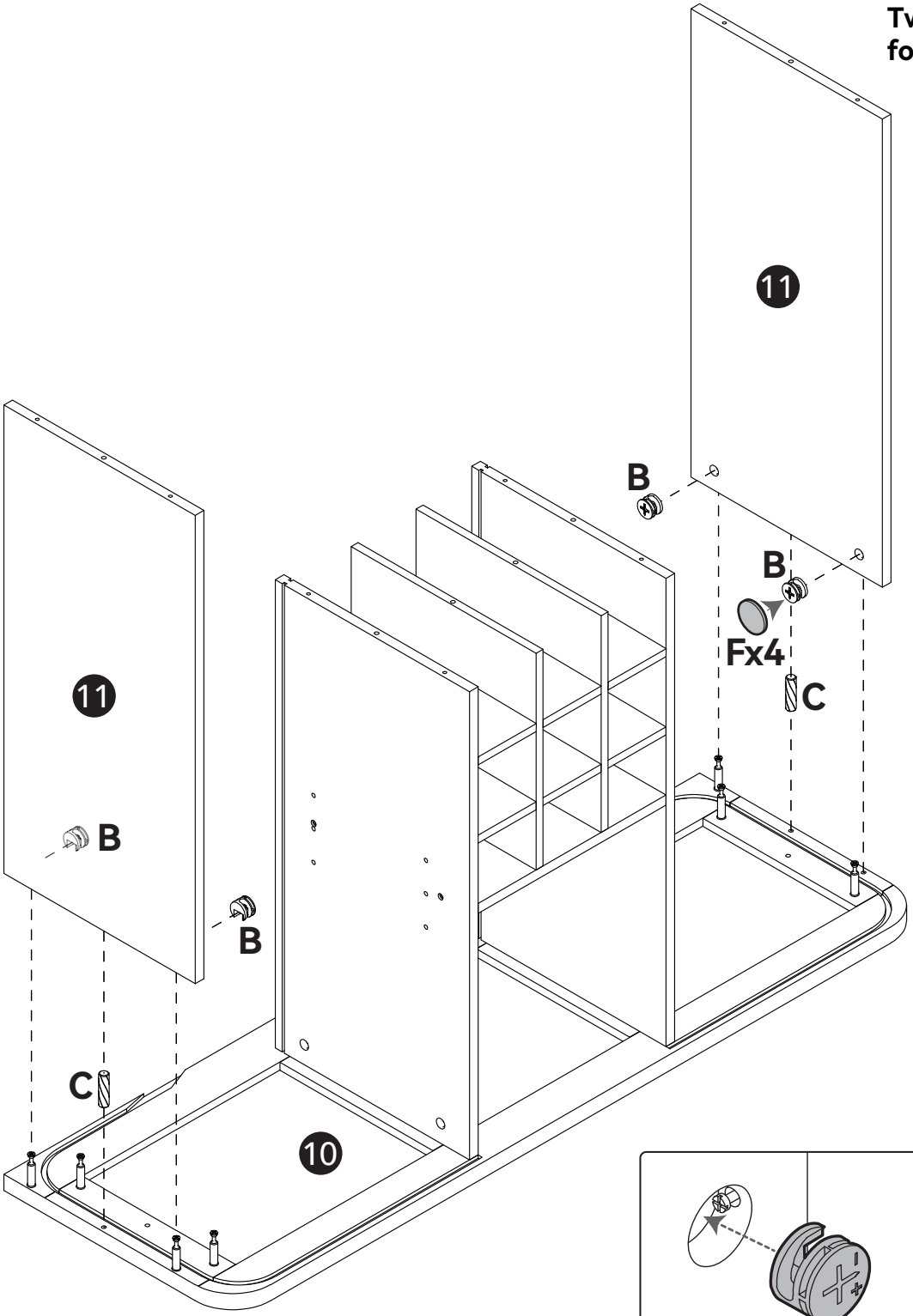

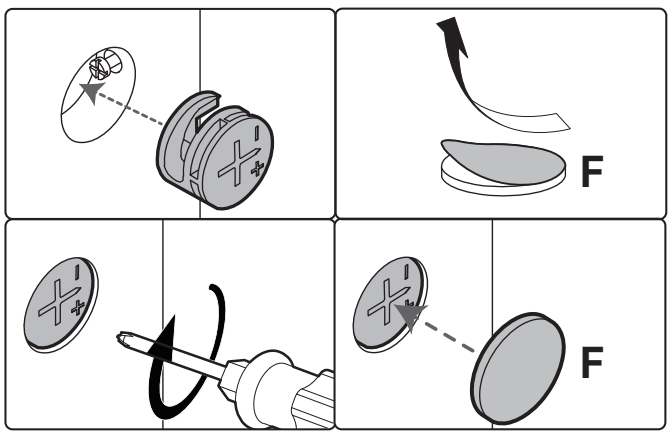

19

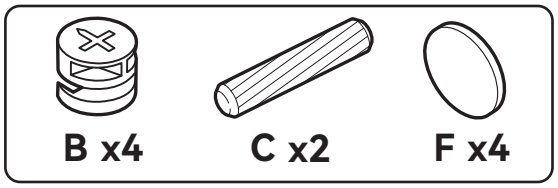

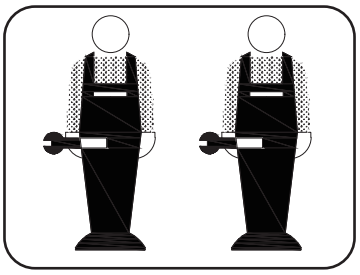

Two people are required for this step.

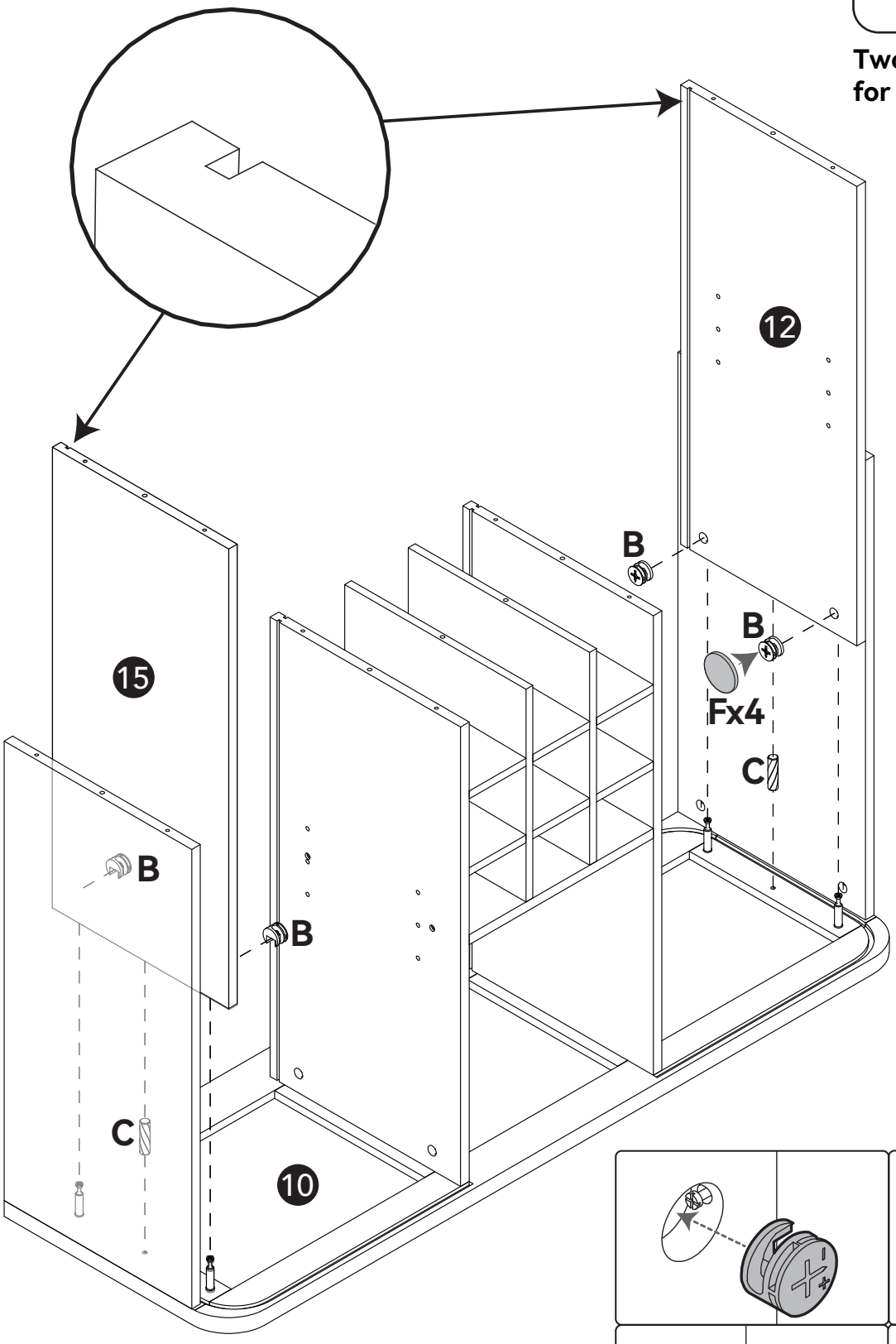

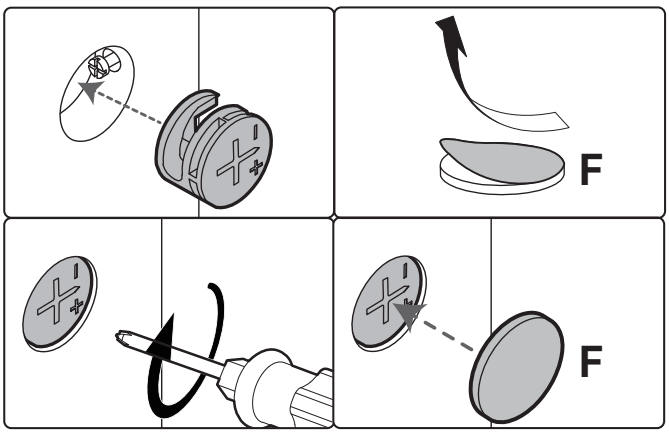

20

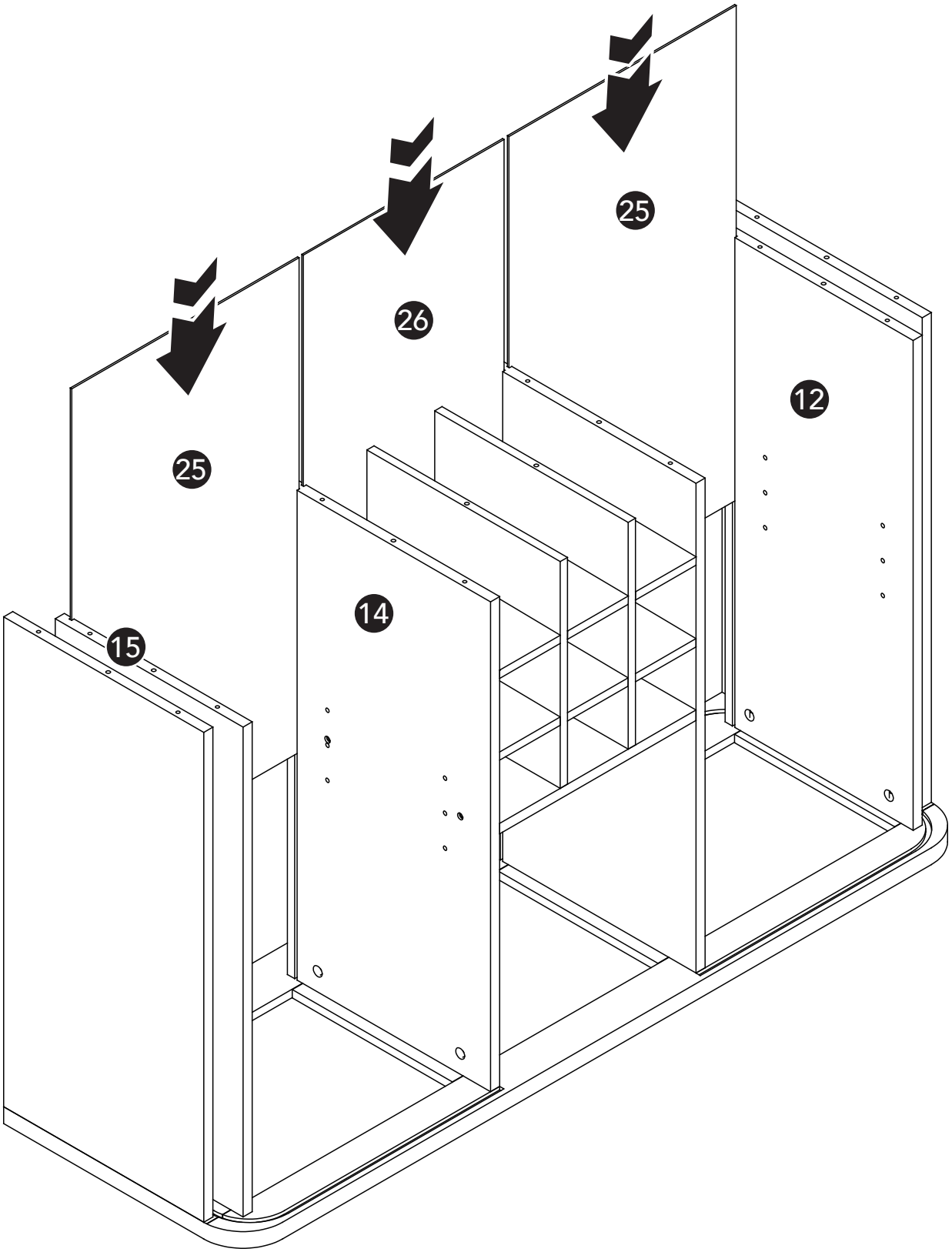

21

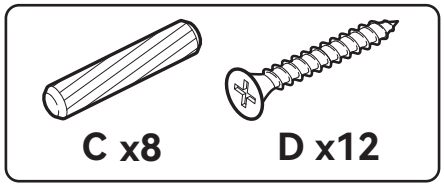

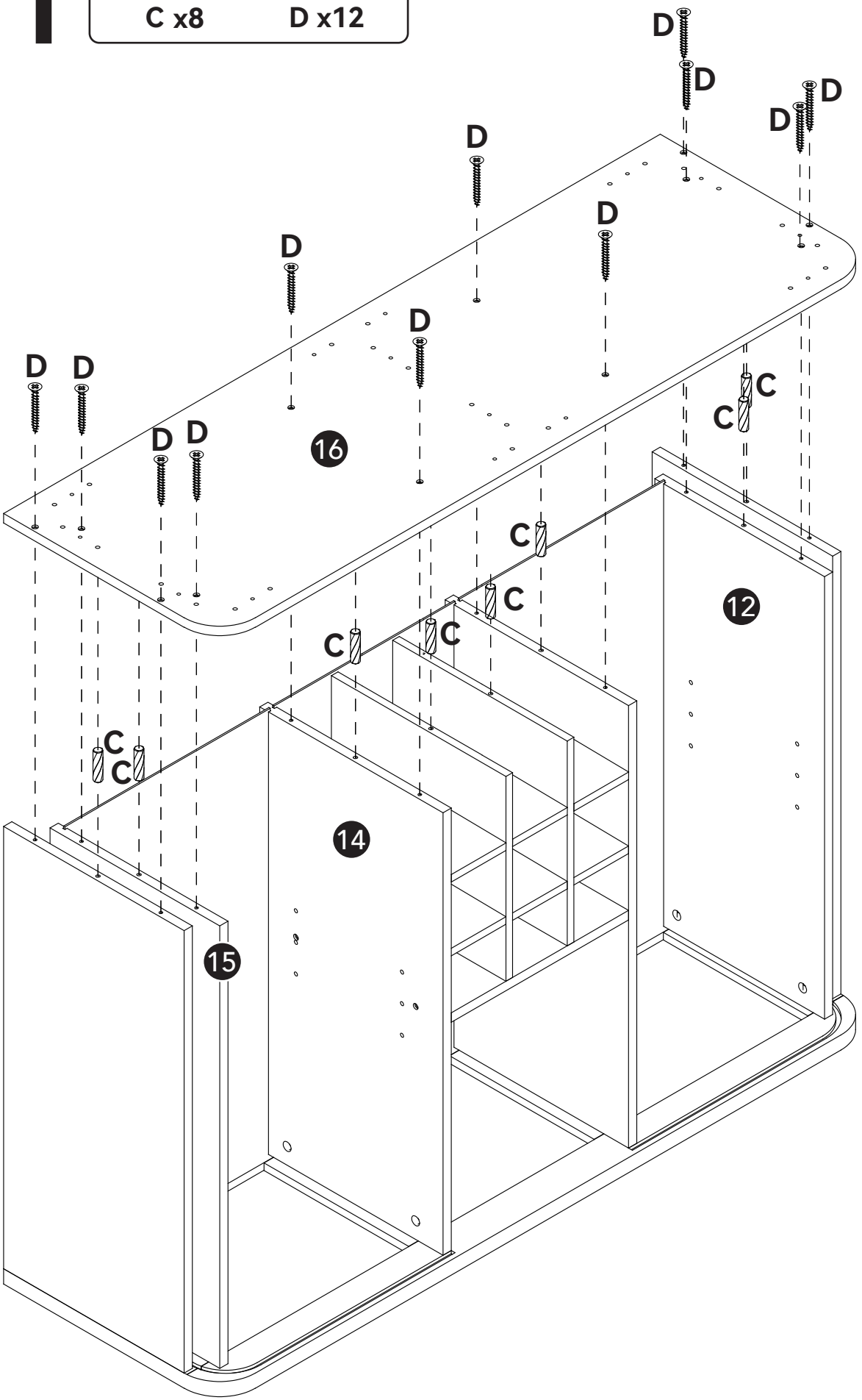

22

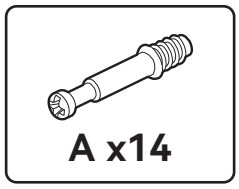

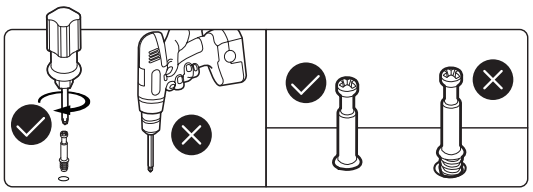

23

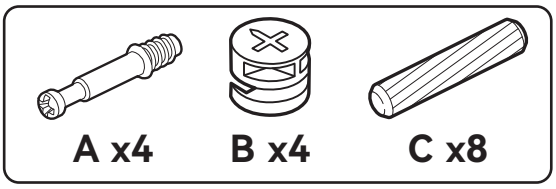

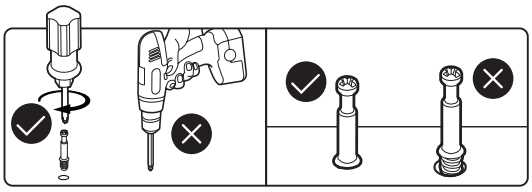

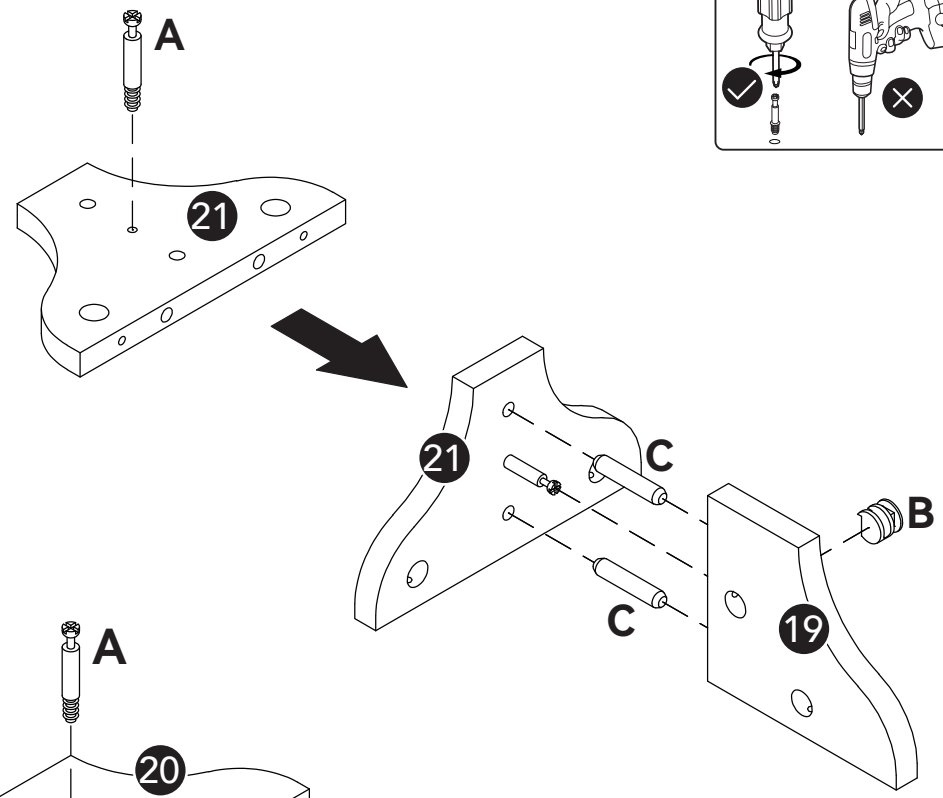

x2

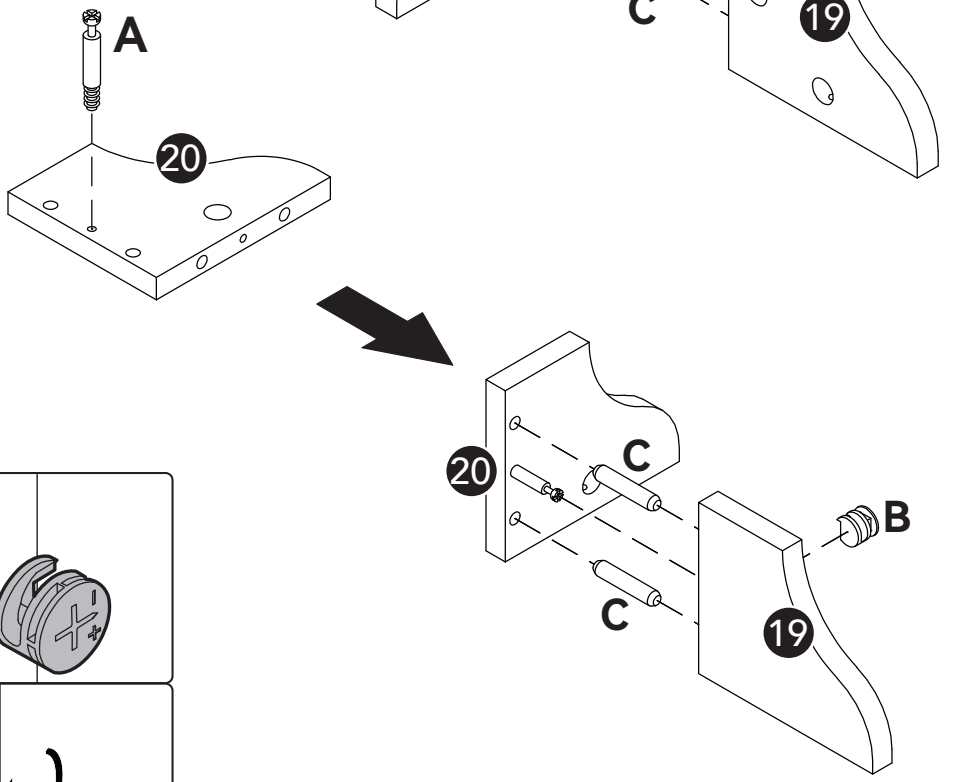

x2

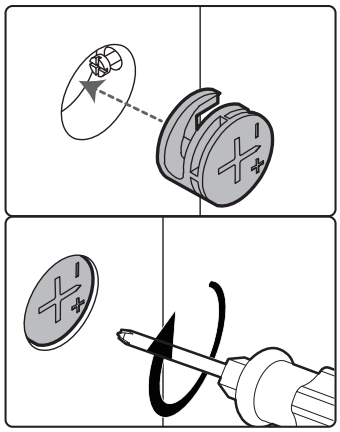

24

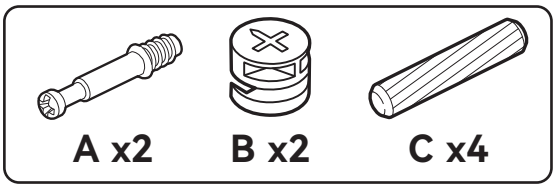

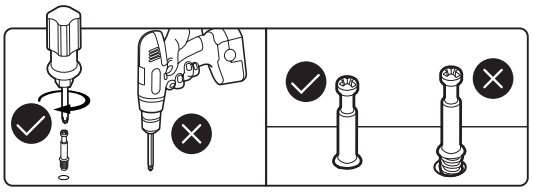

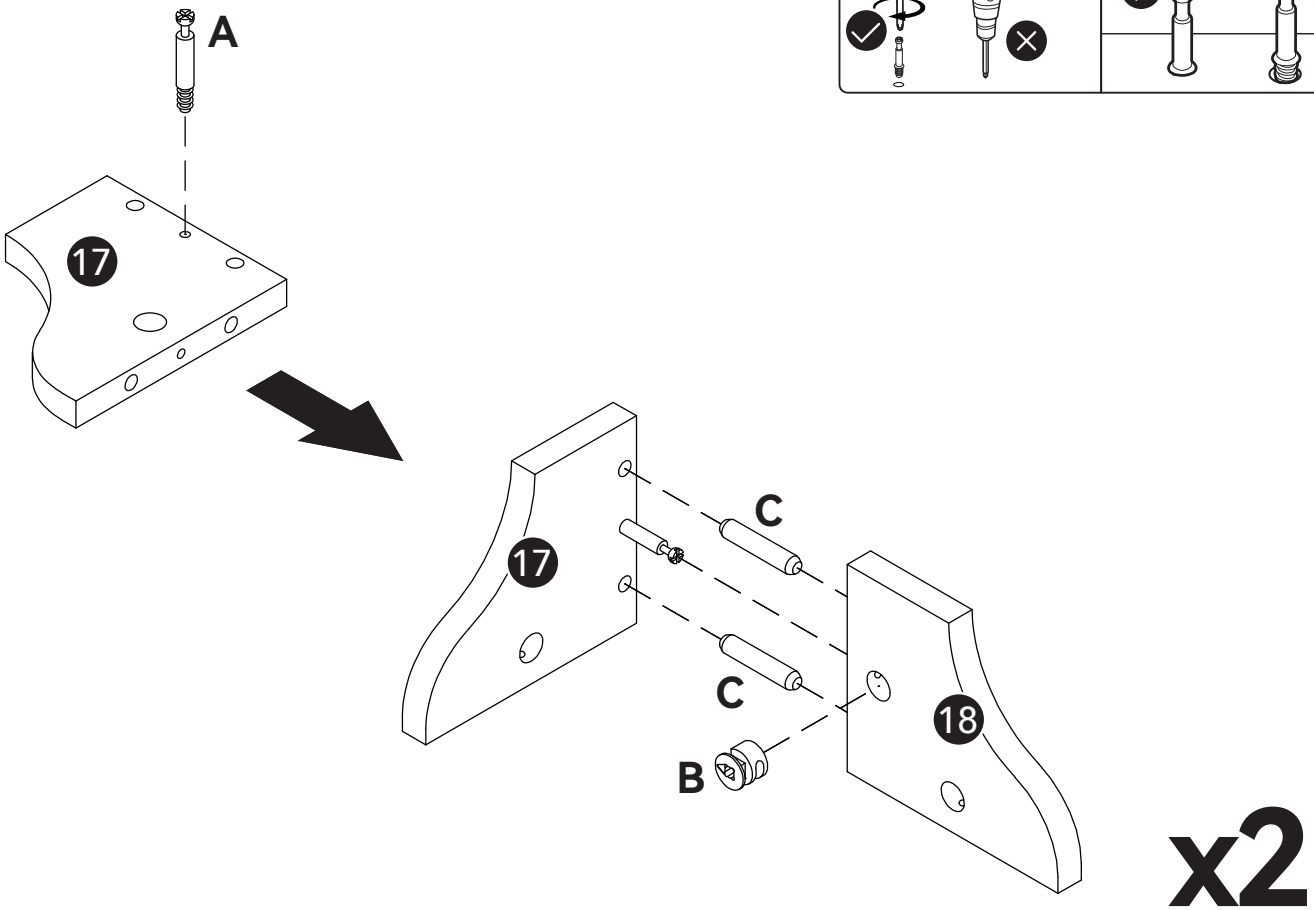

x2

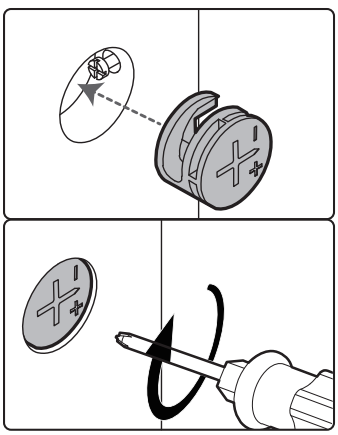

25

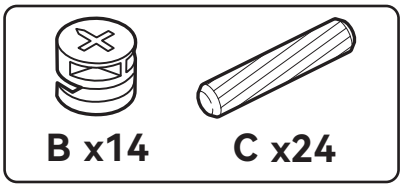
B x14
C x24

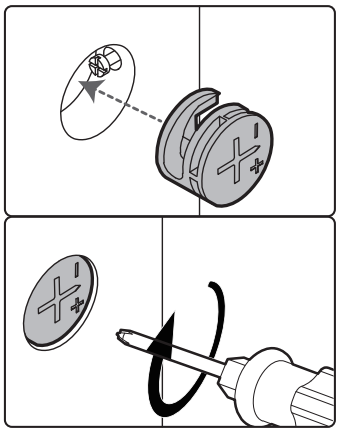

17
18
Bx2
19
Cx4
20
Bx2
Cx4
21
19
Bx2
Cx4
B
19
21
B
Bx2
Cx4
20
Bx2
19
Cx4
18
17
Bx2
Cx4
16

26

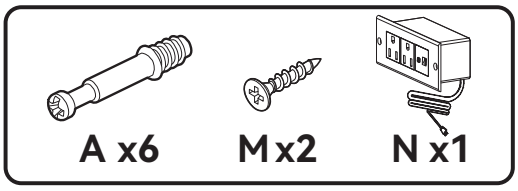

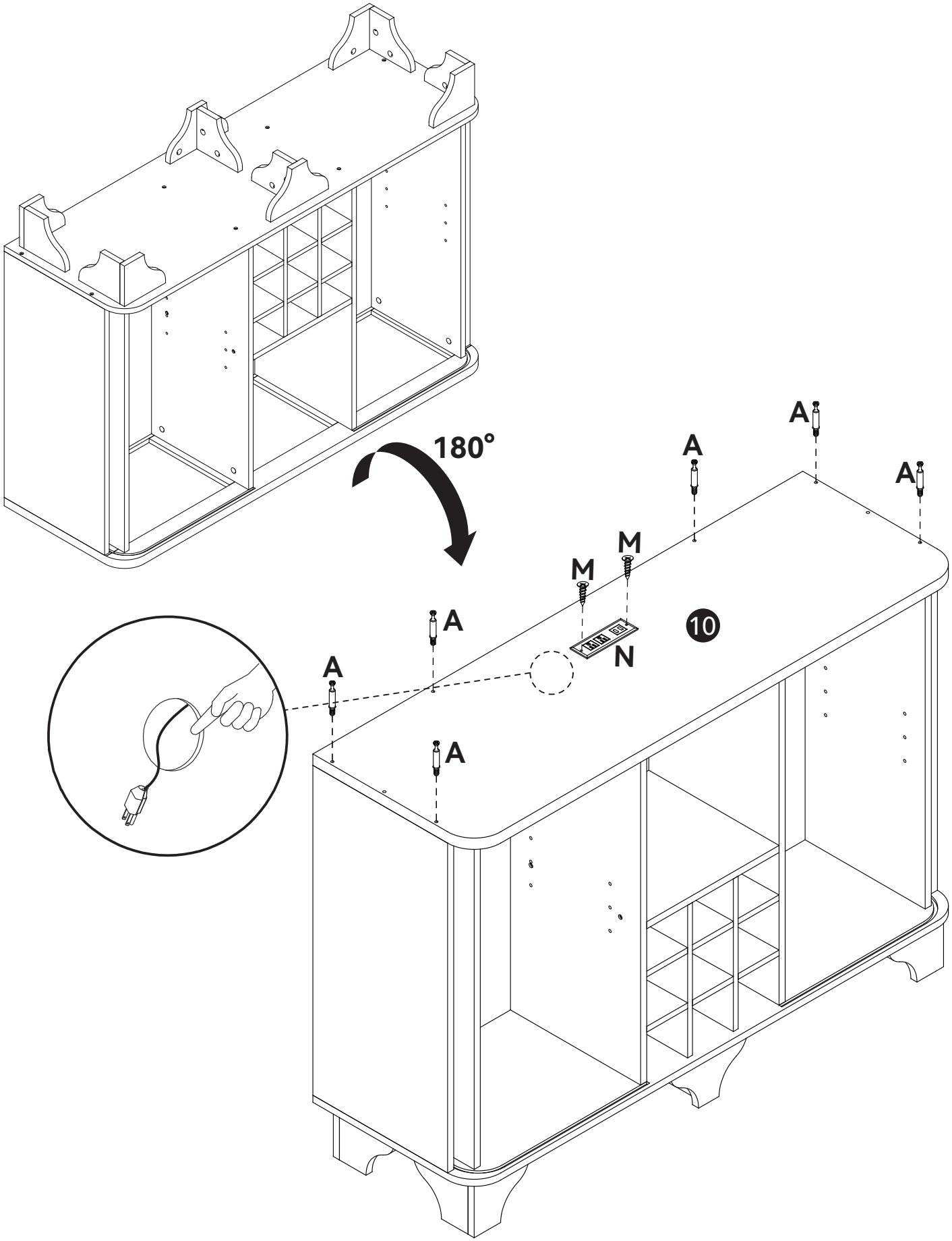

27

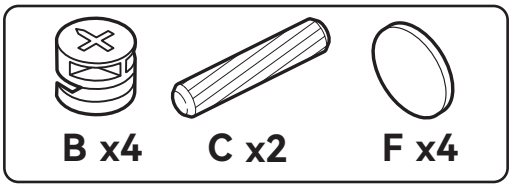

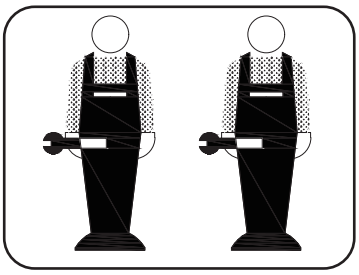

Two people are required for this step.

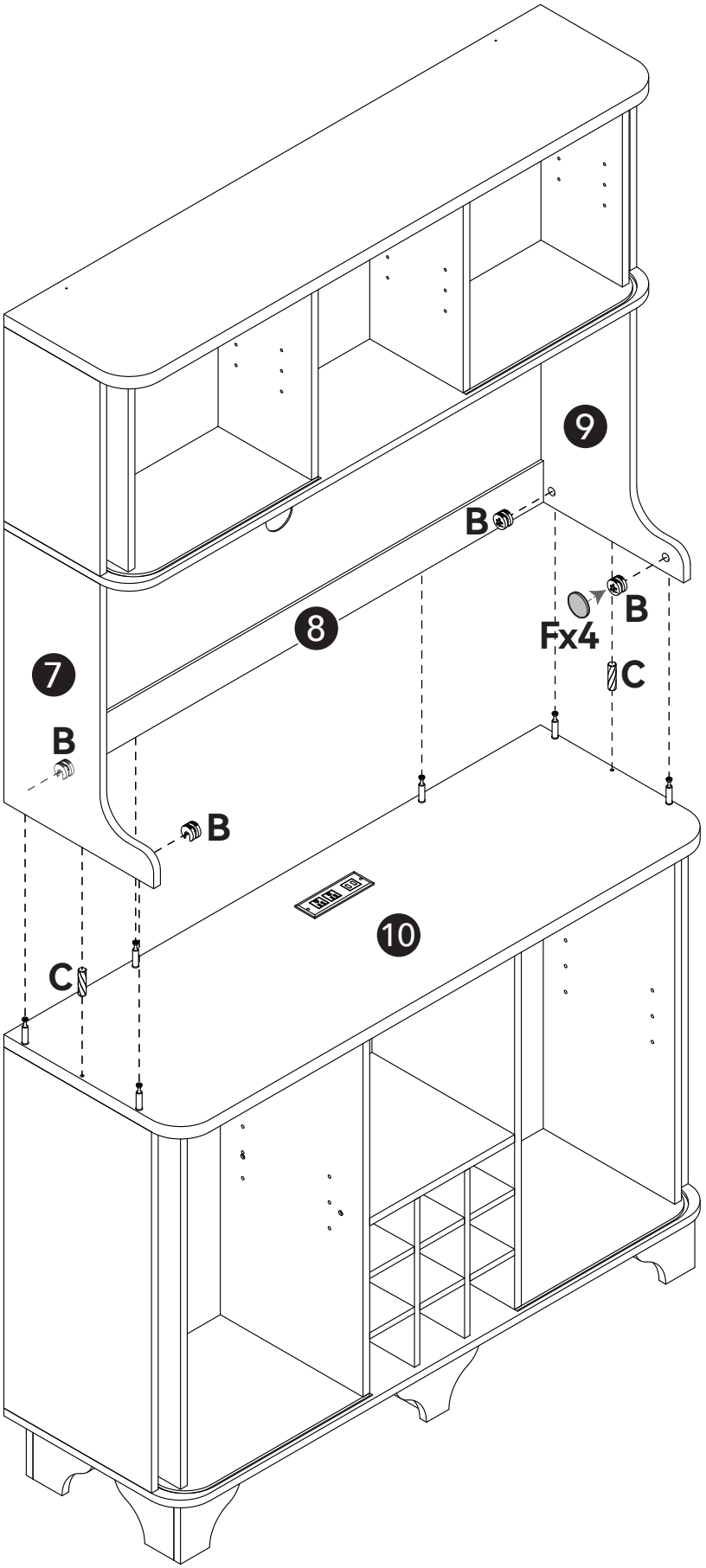

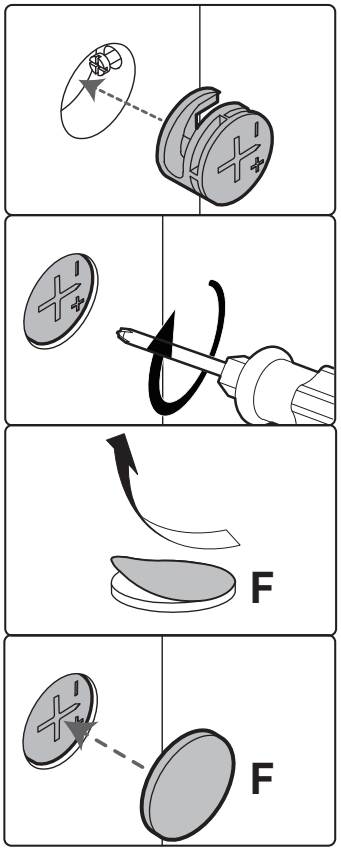

28

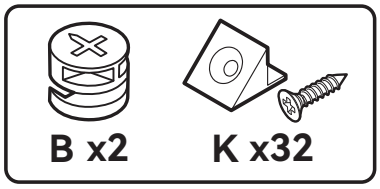

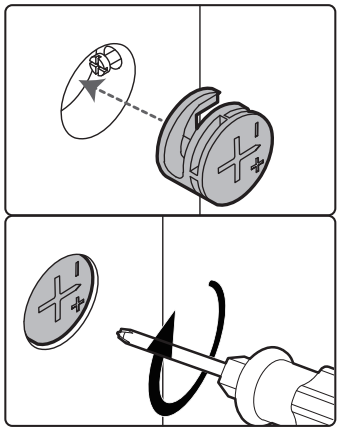

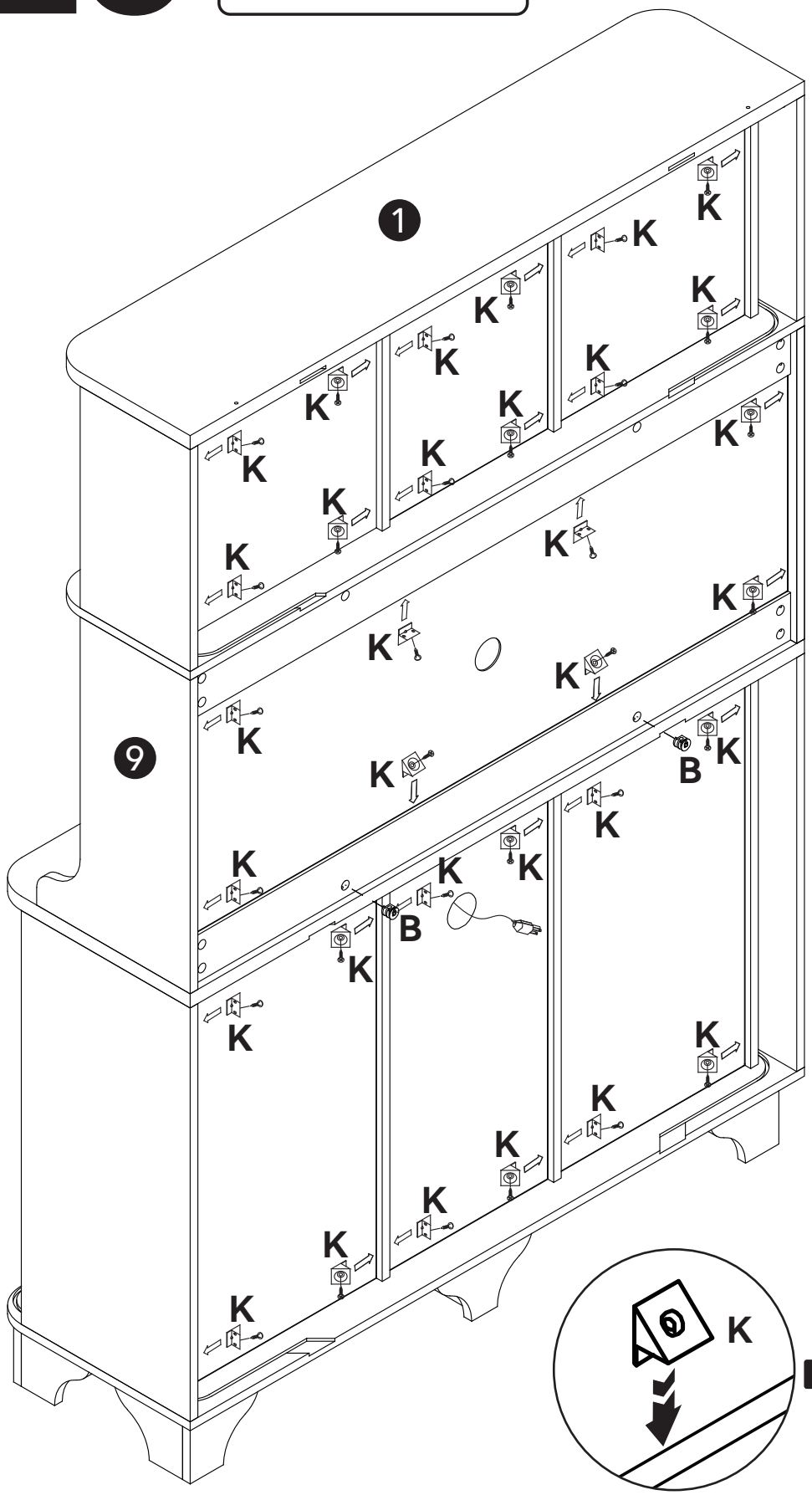

Insert back panel clip into gap.

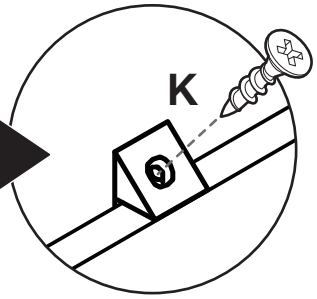

Secure with screw.

29

I x20

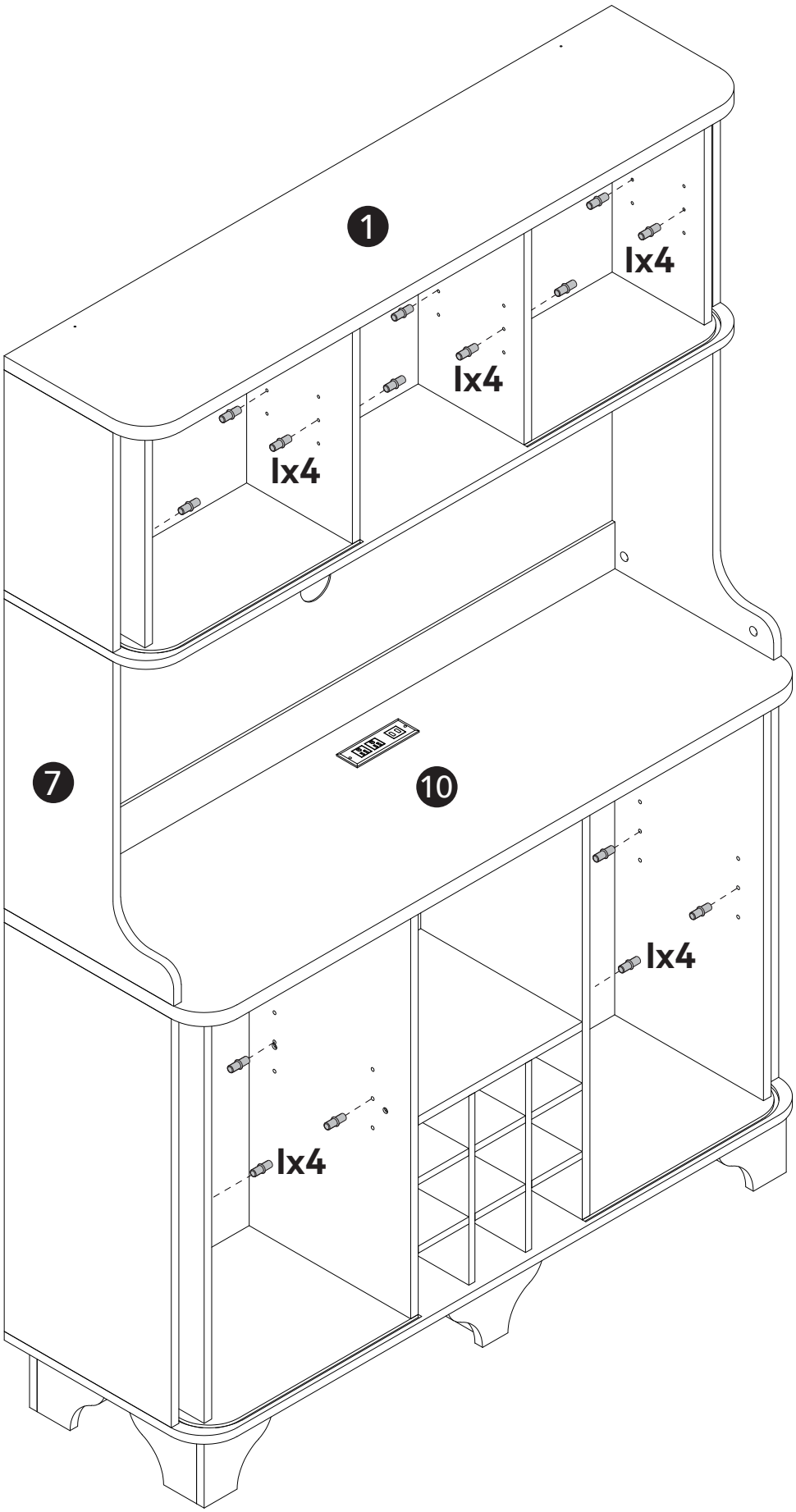

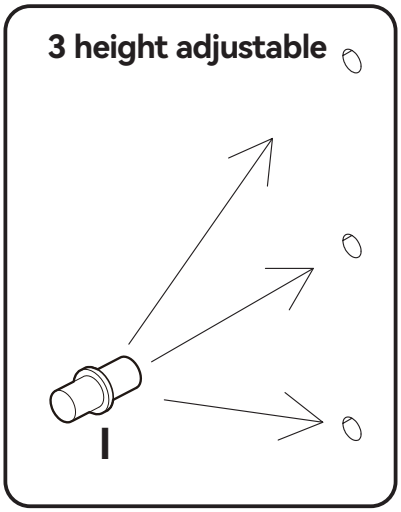

30

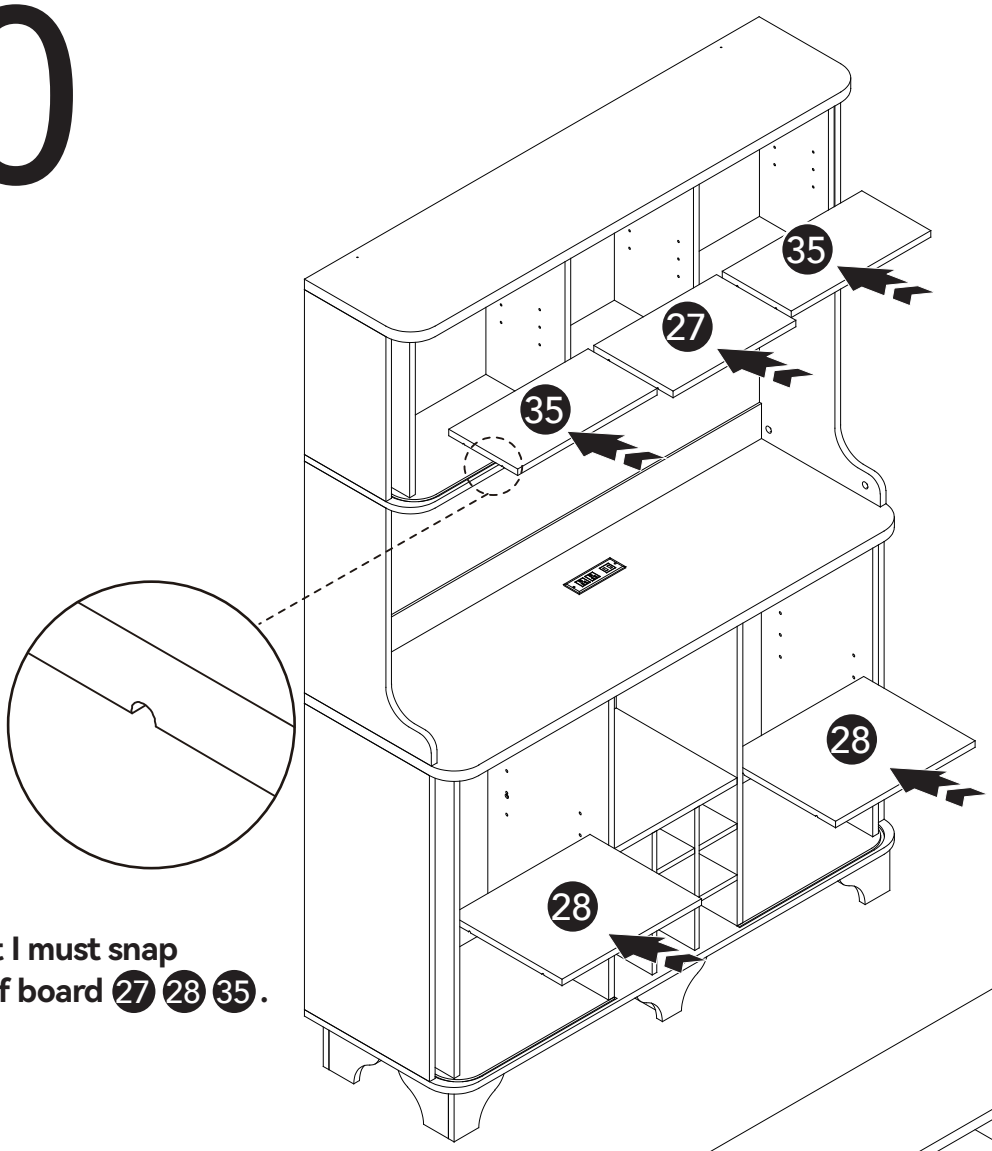

Note: Part I must snap into slot of board 27 28 35.

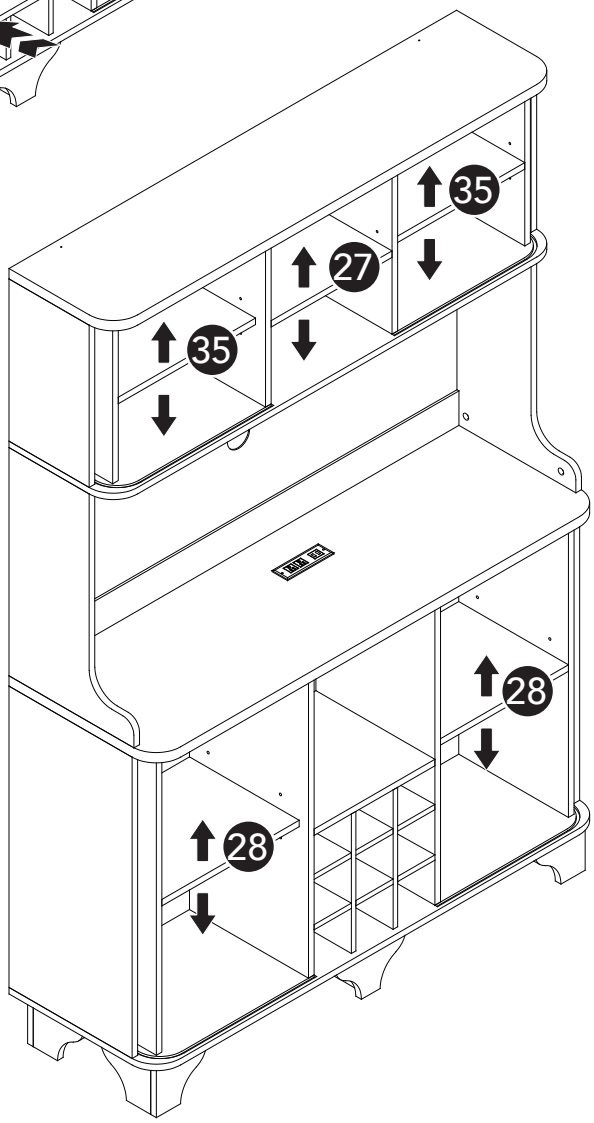

Board 27 28 35 is designed to be adjustable.

31

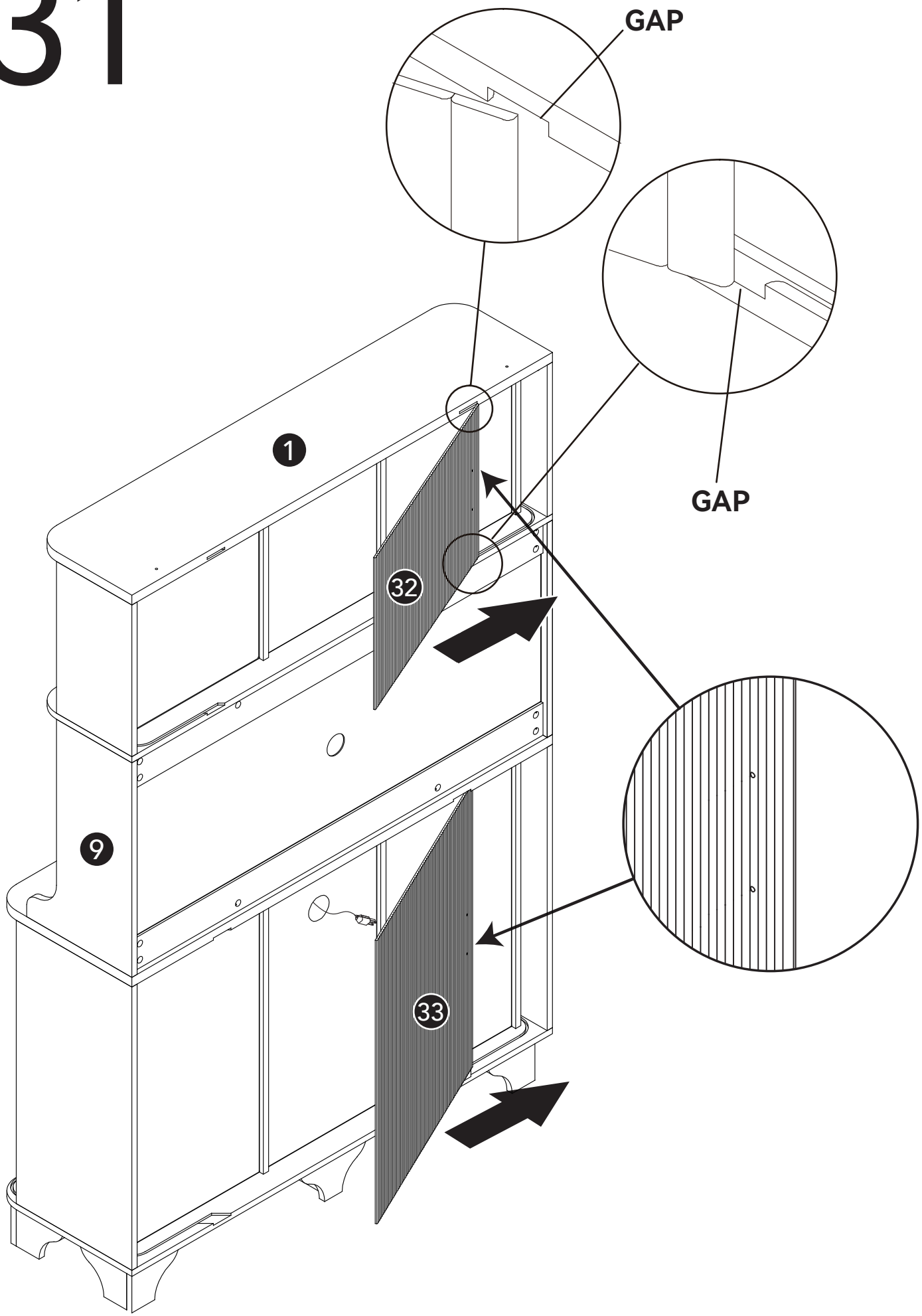

32

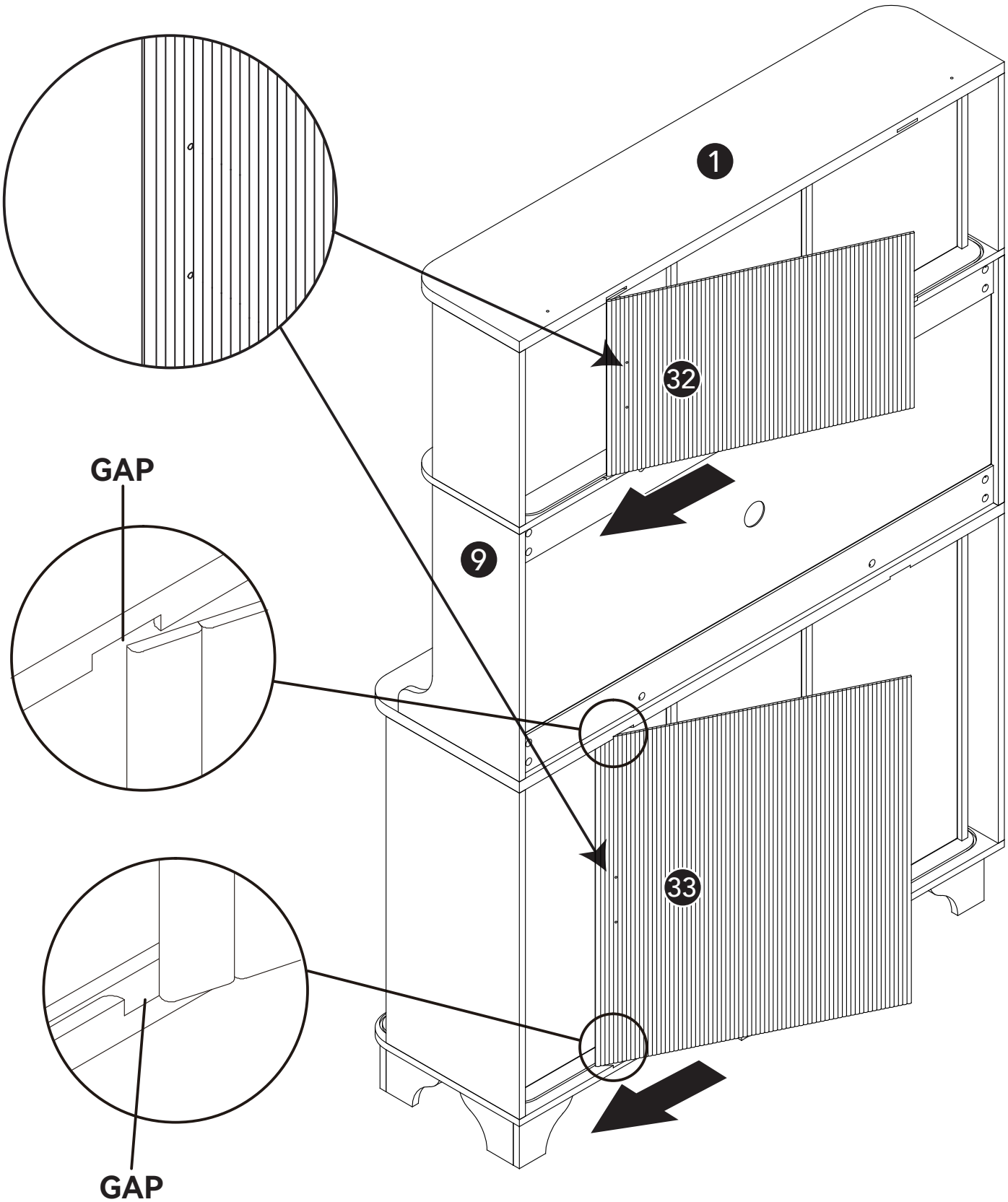

33

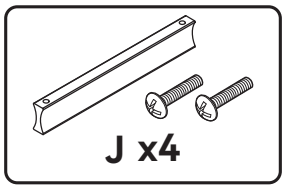

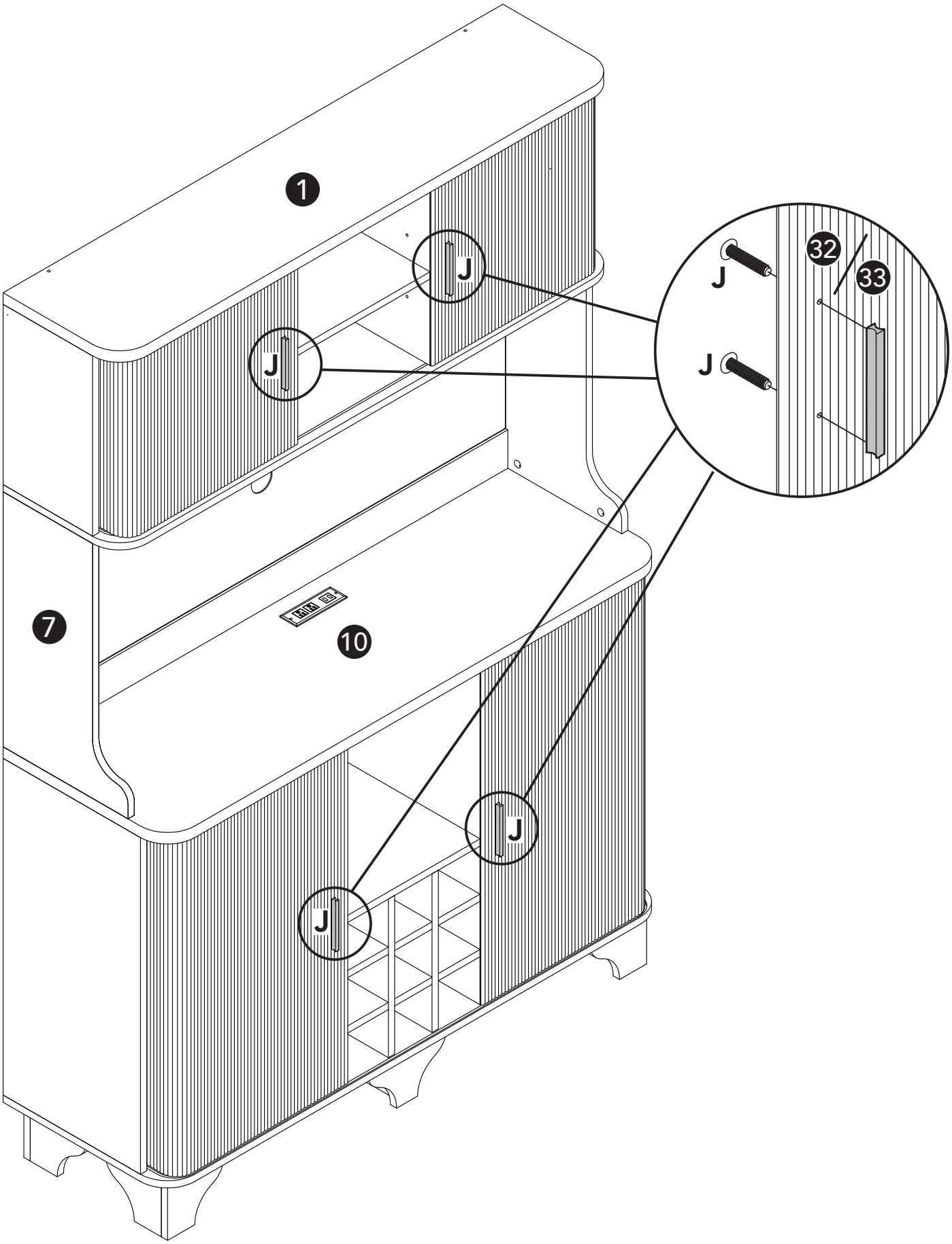

34

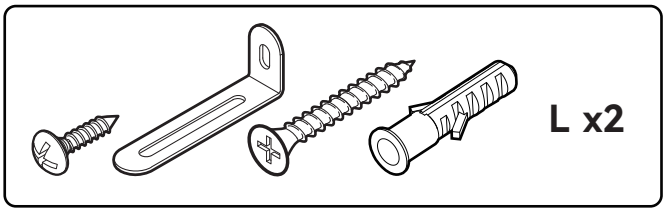

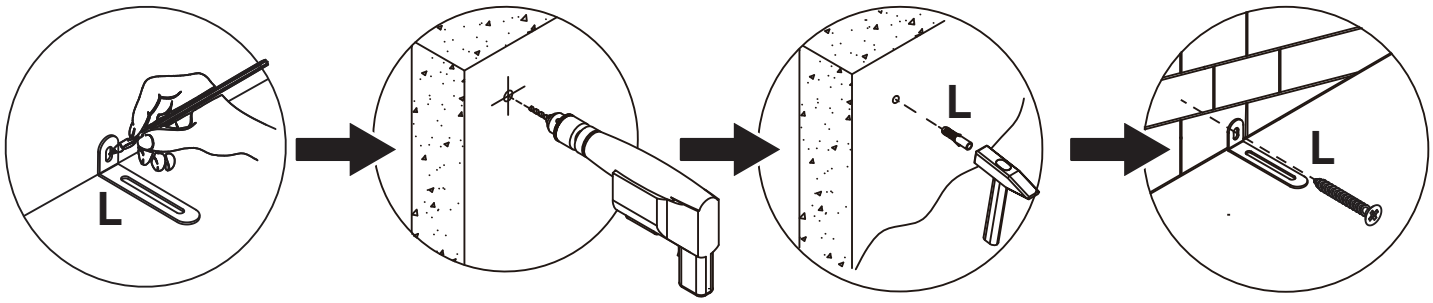

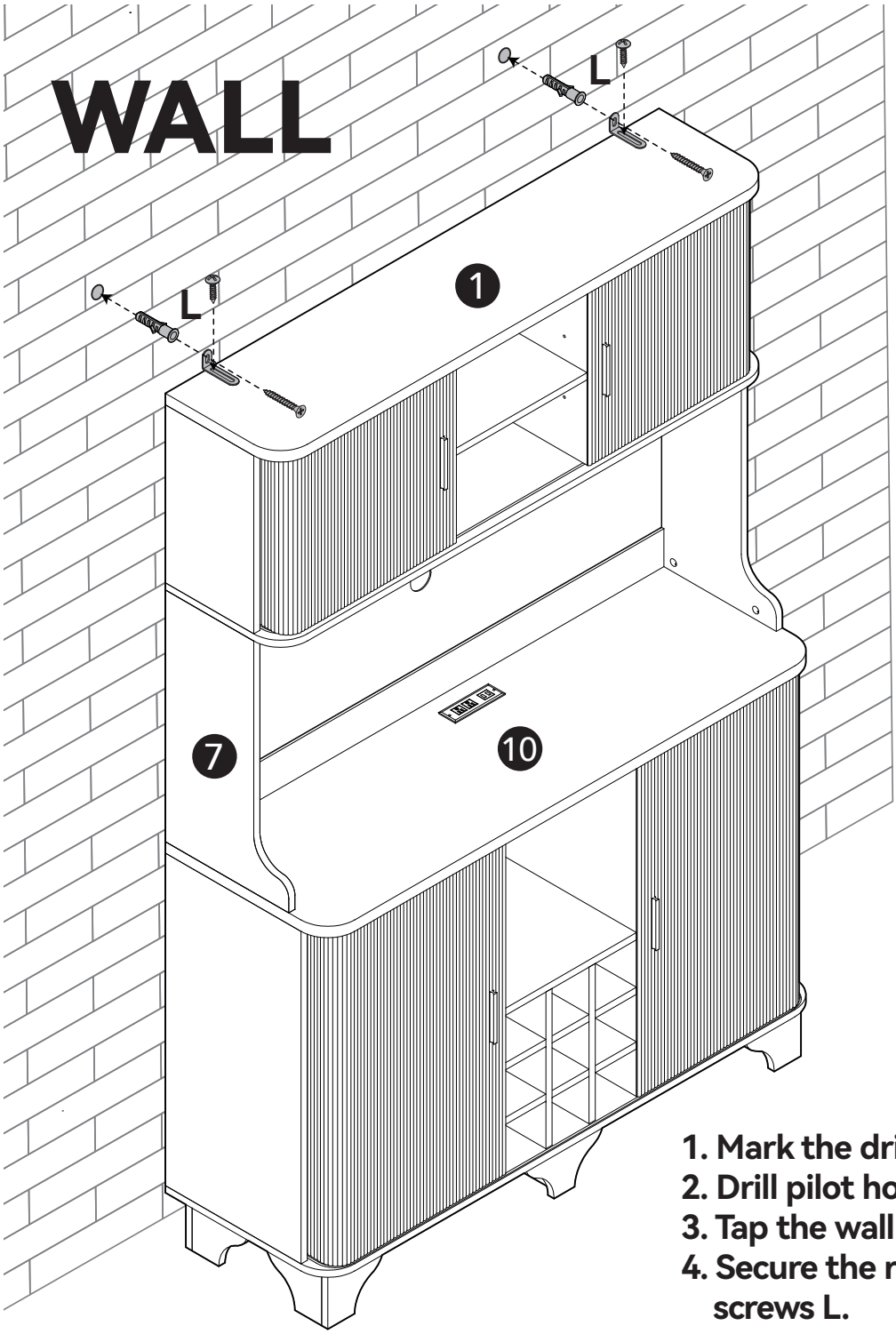

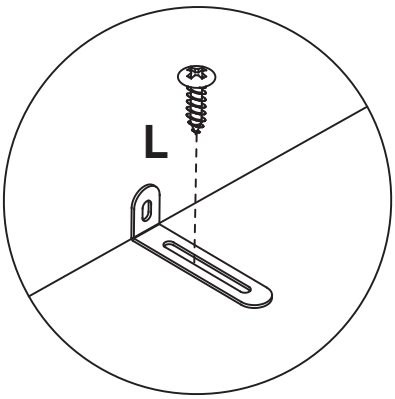

1. Mark the drilling points on the wall.
2. Drill pilot holes using an electric drill.
3. Tap the wall anchors into the holes.
4. Secure the restraint to the wall with screws L.