STEP 5

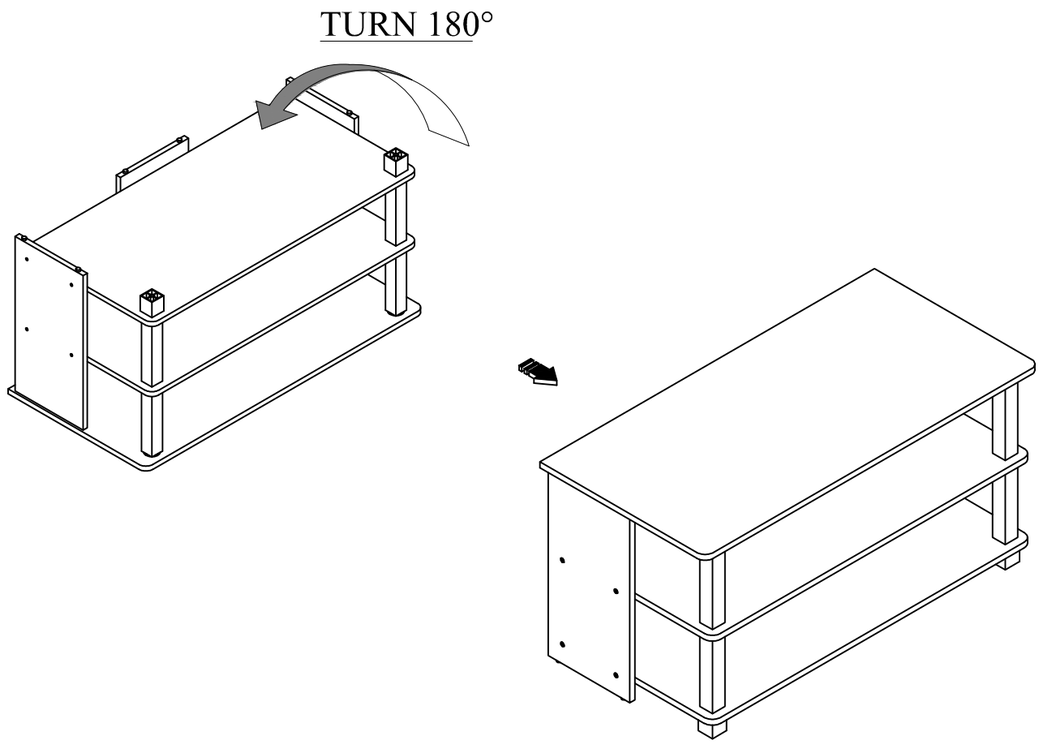

Recommended Maximum Weight

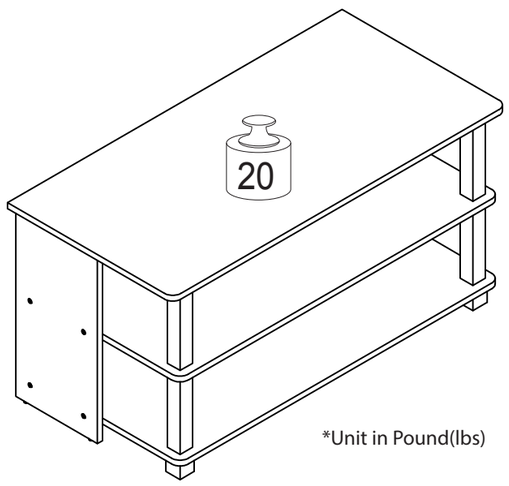

WARNING:

>This unit has been designed to support the maximum loads shown. Exceeding these load limits could cause sagging, instability, product collapse, and/or serious injury.

>DO NOT allow children to climb on unit.

>Put heavier items on lower shelves.

Assembly Instruction

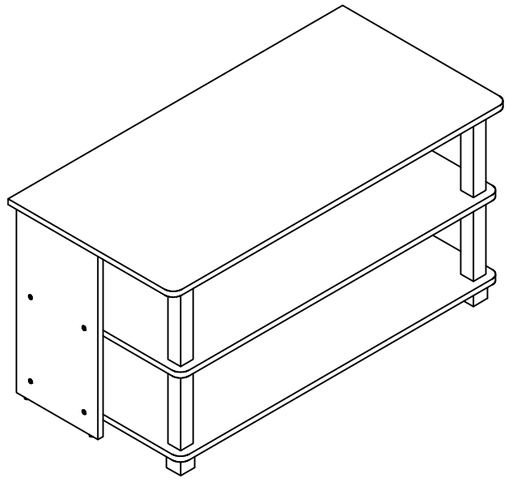

HARDWARE & PARTS LIST

NO	HARDWARE LIST	QTY
1	SHORT POLE	4pcs
2	LEG	2pcs
3	SCREW	12pcs
4	CAM-LOCK SCREW	6pcs
5	CAM-LOCK NUT	6pcs
6	NAIL LEG	6pcs

NO	PARTS LIST	QTY
A	TOP PANEL	1pc
B	SHELF PANEL	2pcs
C	SIDE PANEL	2pcs
D	BACK PANEL	1pc

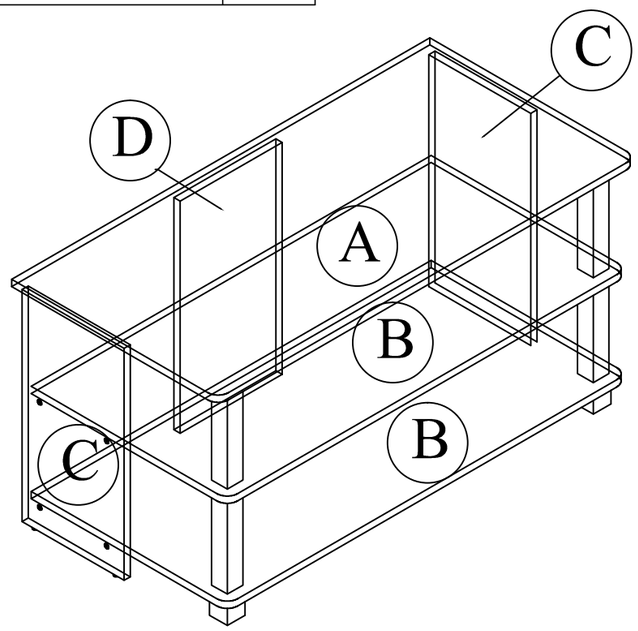

USEFUL HINTS BEFORE YOU START:

1. Read each step carefully before starting.
2. It is important that each step is performed in correct order to avoid difficulties.
3. Identify, sort and count the parts before assembly.
4. Assemble your furniture on packaging cardboard to prevent scratch or damage.
5. Clean the product with mild cleanser using soft damped cloth. Do not use harsh or abrasive cleanser.
6. Using uncompatible hardware might cause damage to product.

ASSEMBLY INSTRUCTIONS

BEFORE YOU BEGIN, PLEASE READ ASSEMBLY INSTRUCTION CAREFULY, FOLLOW THEM STEP BY STEP.

STEP 1

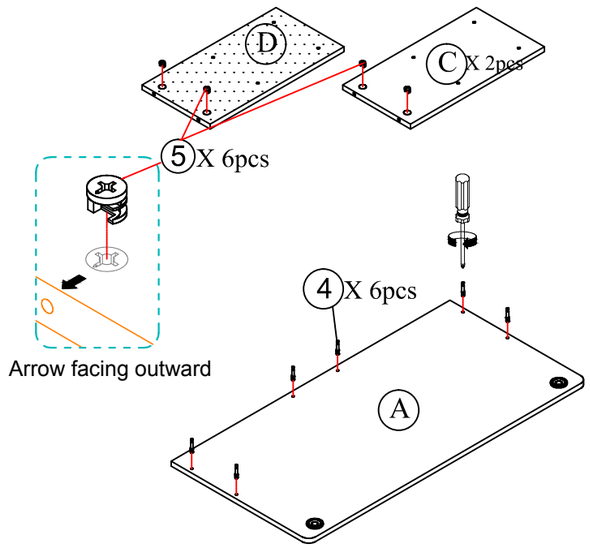

STEP 2

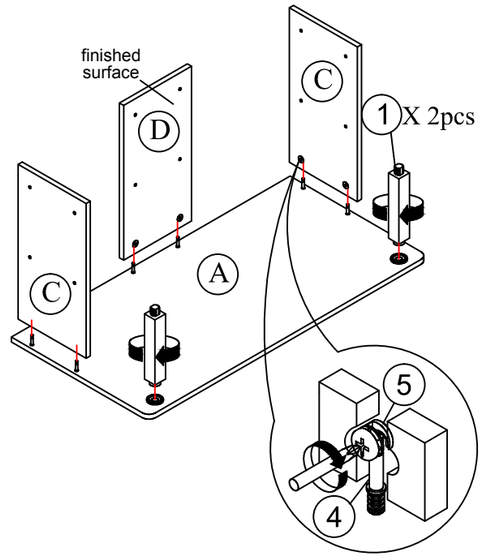

STEP 3

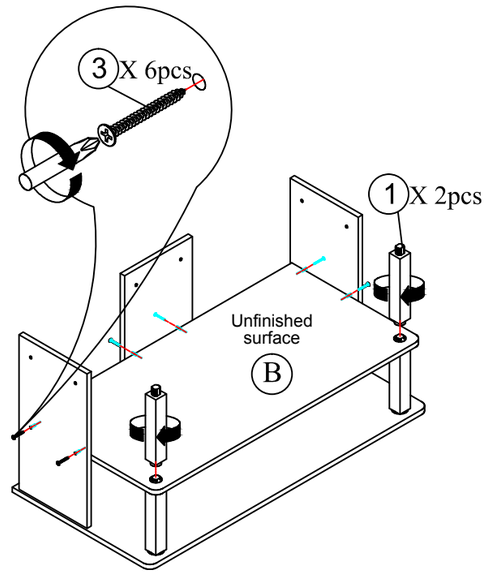
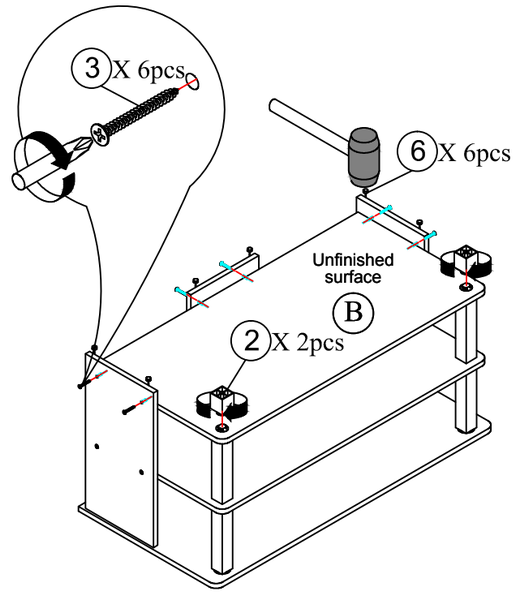
STEP 4