626 679 3588
support@trendytotesinc.com
162 Atlantic St, Pomona, CA 91768

NTQ®
*Better Life Together*

# DIMENSION DETAILS

## BATHROOM VANITY TOP

## MODEL NPW4222-L-3K8

support@trendytotesinc.com
626 679 3588

SCAN ME
PRODUCT INSTRUCTION VIDEO

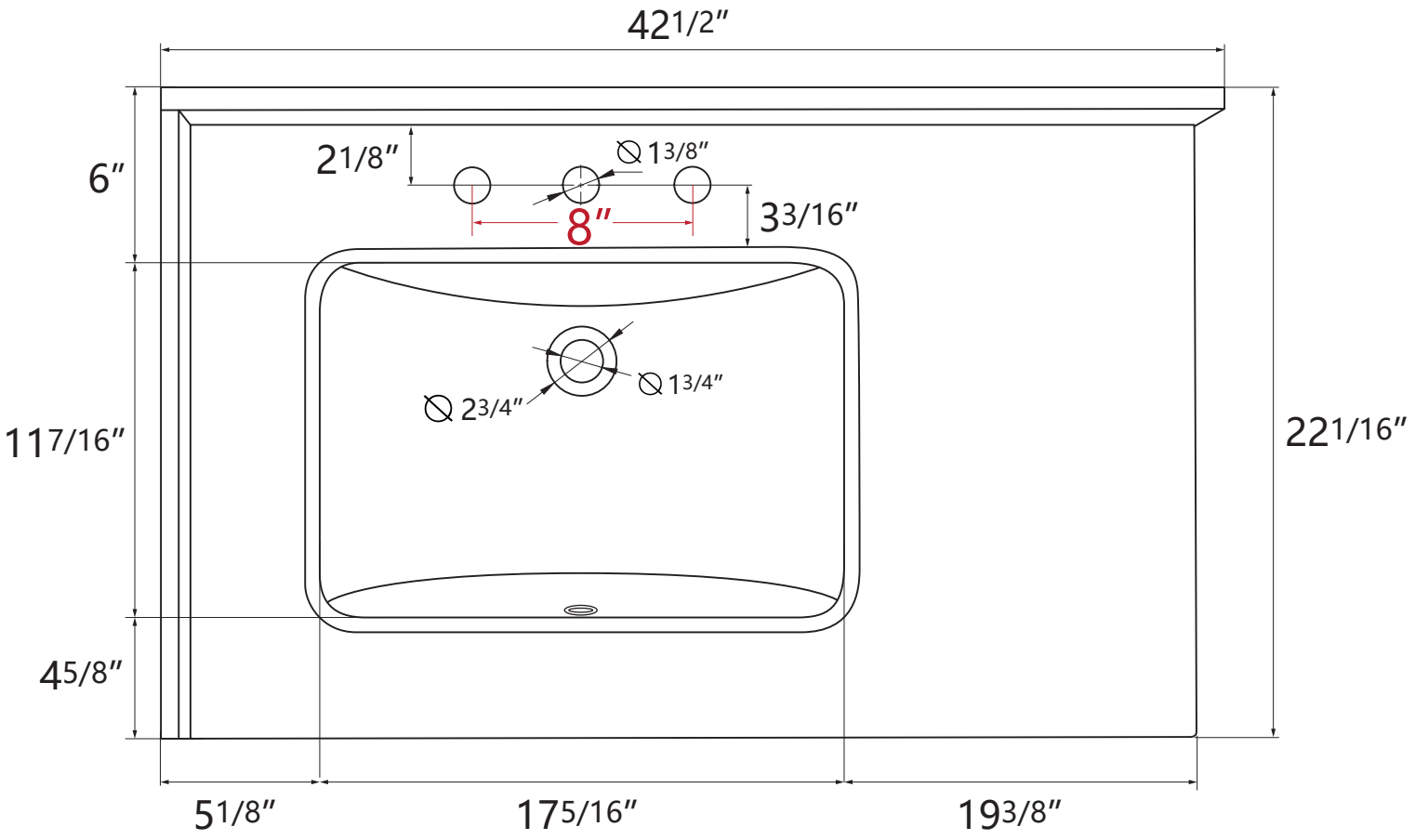


Top View

## VANITY SIZE

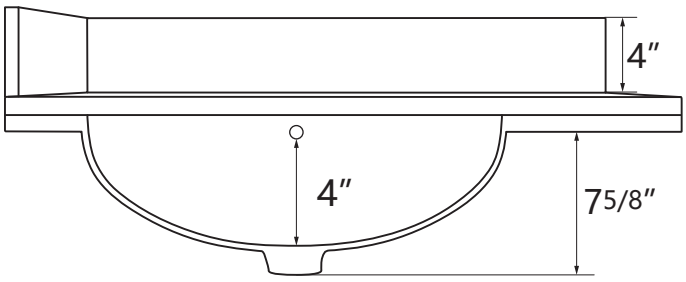


Front View

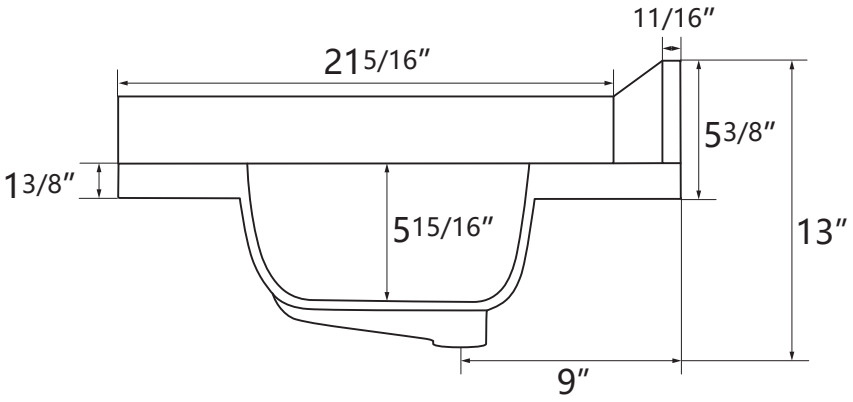


Side View