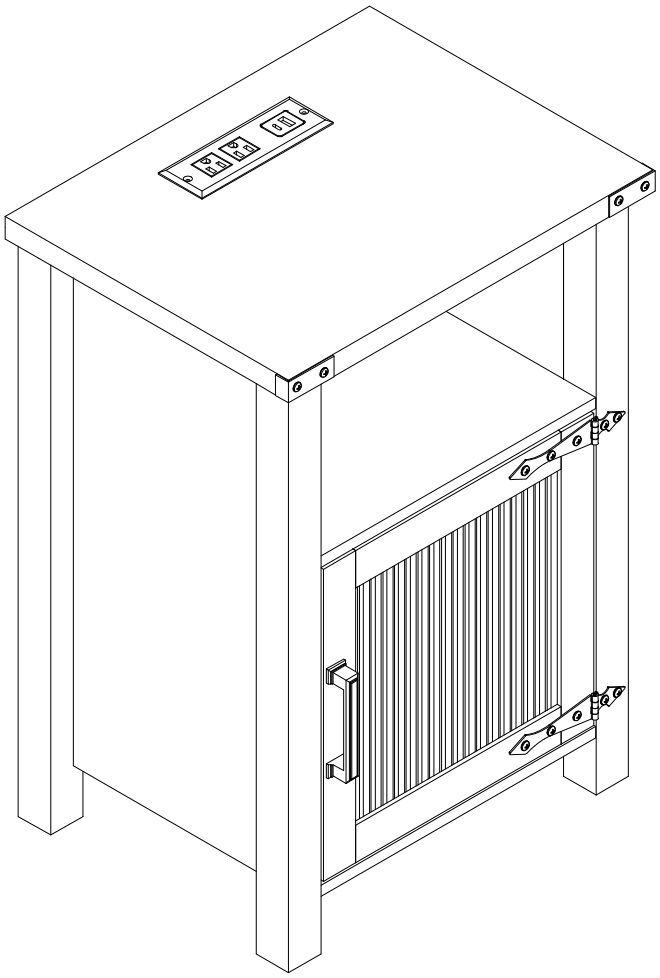

ATTENTION

If there is any missing, please kindly send us messages to let us know the part number of missing part regarding to the first page of instructions.

Please also provide your full address, recipient name and contact phone number so that we can send replacement to you as soon as possible.

BEFORE STARTING

Before Using Product

- Read each step carefully before starting.It is very important thateach step is performed in the correct order.If these steps are not followed in sequence,assembly difficulties will occur.
- Make sure all parts are included.
- Work in a spacious area and near where the unit will be used,preferably on a carpet,or use a piece of the cardboard packaging to protect your floor and product.
- For a smooth assembly process,we suggest you keep a lite tightness for all the screws during assembly.After the whole product is assembled, firmly tighten all the screws.

⚠ WARNING

- Do not allow children to climb on unit.
- Avoid sharp objects or corrosive chemicals to prevent damage to the product.
- During assembly,keep parts and packaging materials away from children and pets as there could be potential injury and choking hazards.
- Please make sure that all objects are removed before moving the assembled unit.
- The unit must be team lifted,not dragged or pushed.Failure to do so could cause instability,product collapse,and/or serious injury.
- Be careful when using power tools to assemble your furniture.Power tools may strip or damage the parts.

QUICKFIT

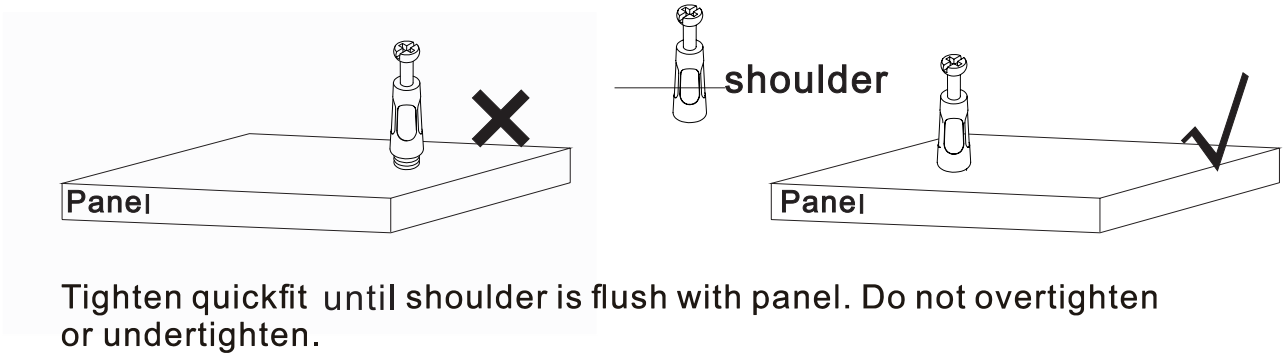

Tighten quickfit until shoulder is flush with panel. Do not overtighten or undertighten.

CAM LOCK

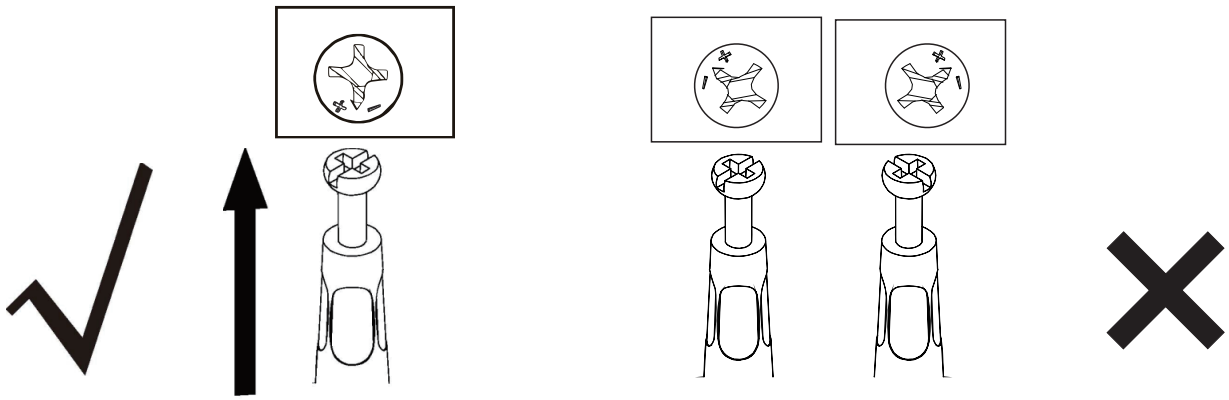

CORRECT WRONG

When fitting cam lock, ensure starting positions is correct before you insert cam lock to quickfit.

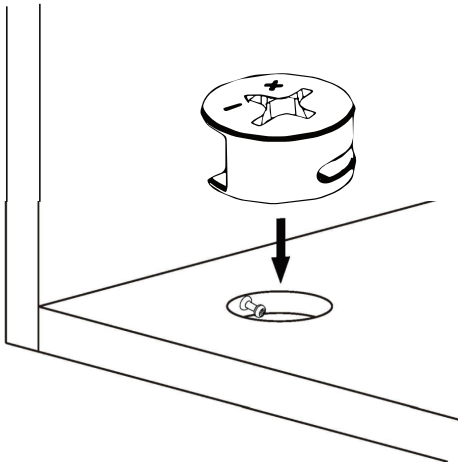

Quickfit head should be in the center of the cam lock. When the two panels are joined. Cam lock should be inserted before quickfit.

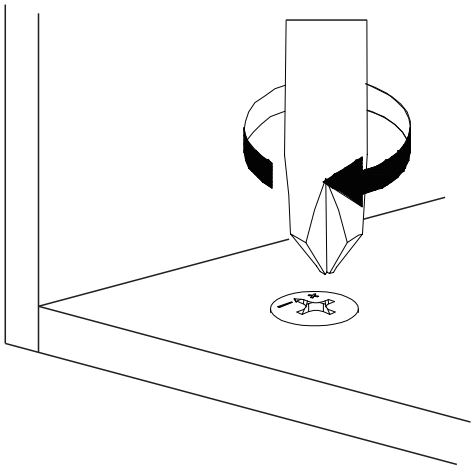

Turn cam lock clockwise to tighten.

PART LIST

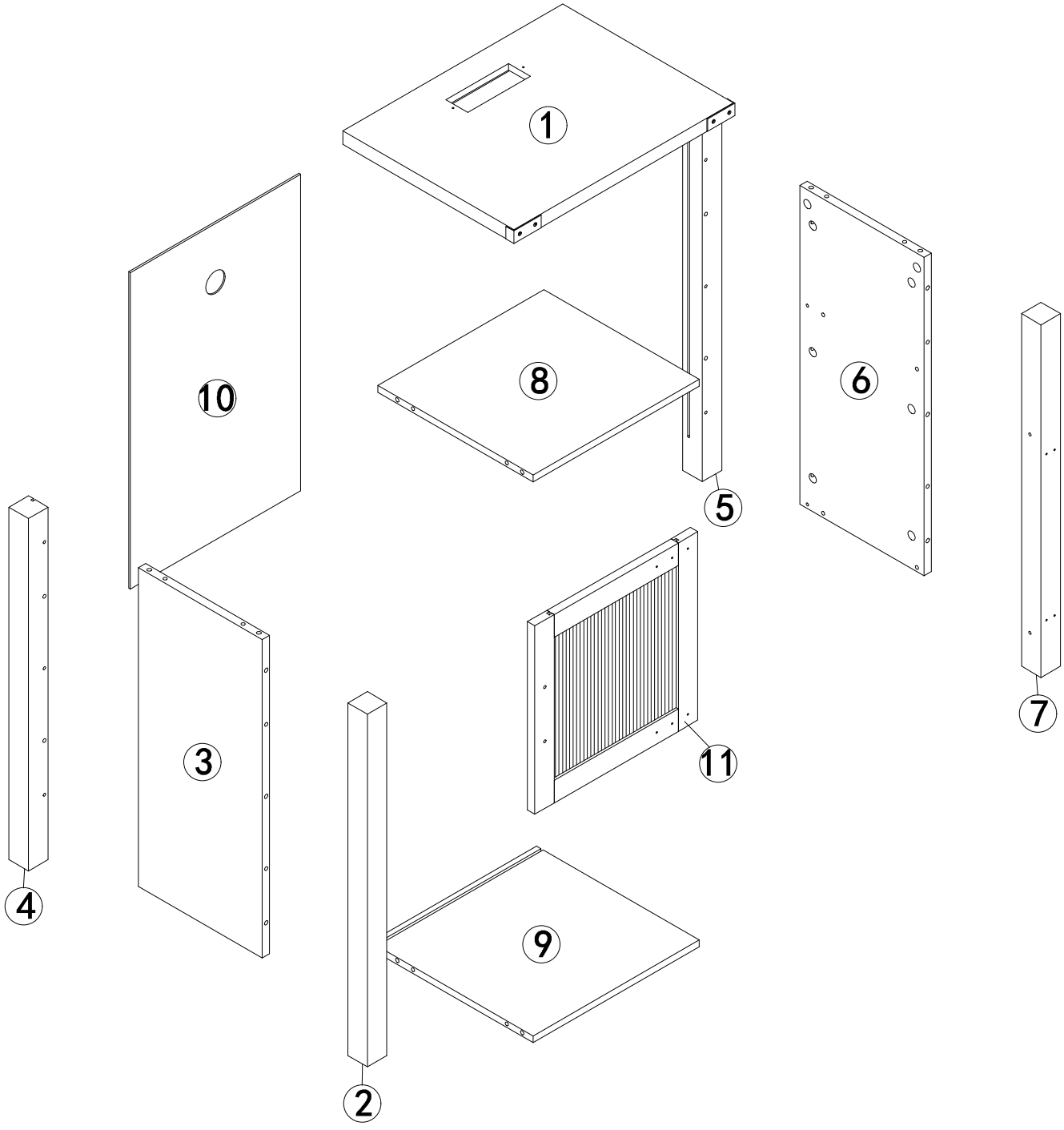

PART LIST

① 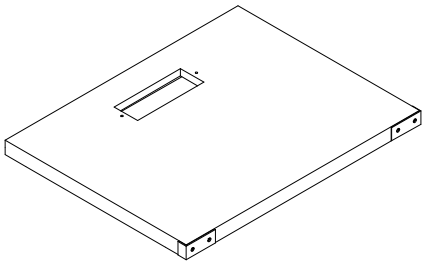 1PCS	②  1PCS	③ 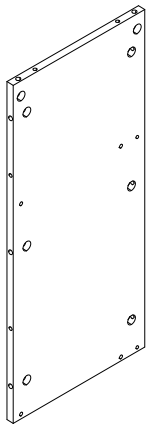 1PCS
④  1PCS	⑤  1PCS	⑥ 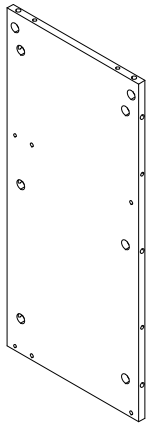 1PCS
⑦  1PCS	⑧ 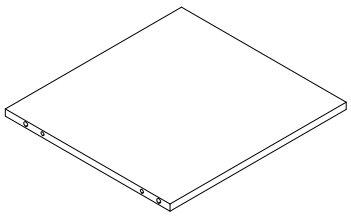 1PCS	⑨ 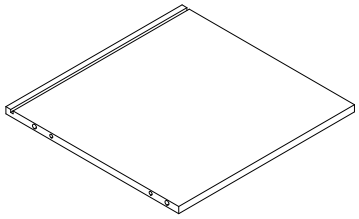 1PCS
⑩ 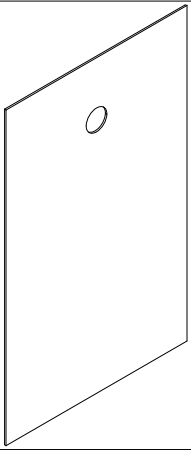 1PCS	⑪ 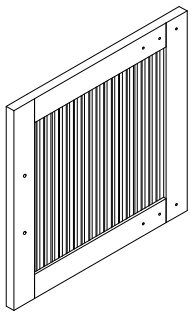 1PCS	

HARDWARE LIST

A 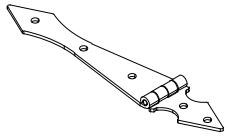 **2PCS**	**B**  **ϕ3.5X14** **(14+1)PCS**	**C**  **ϕ3X15** **(6+1)PCS**
D  **ϕ6X30** **(20+1)PCS**	**E** 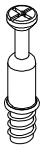 **ϕ6X32** **(24+1)PCS**	**F**  **ϕ15X9.5** **(24+1)PCS**
G  **4PCS**	**H** 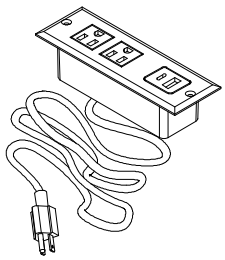 **1PCS**	**I**  **1PCS**
J  **ϕ3X12** **2PCS**	**K**  **ϕ4X20** **2PCS**	**L**  **1PCS**
M 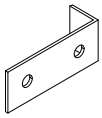 **2PCS**	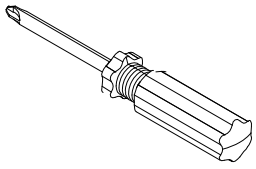 **1PCS**	

STEP 1

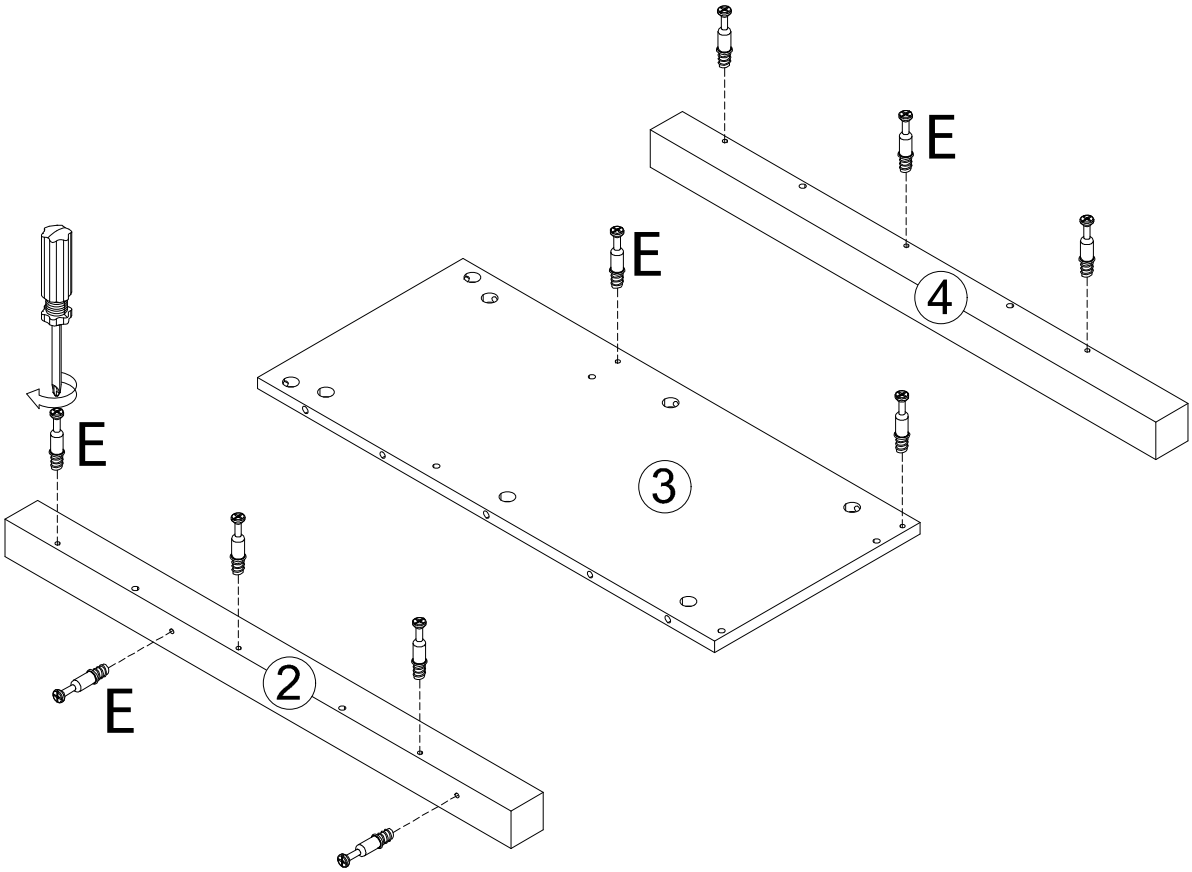

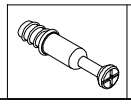

E X 10PCS

STEP 2

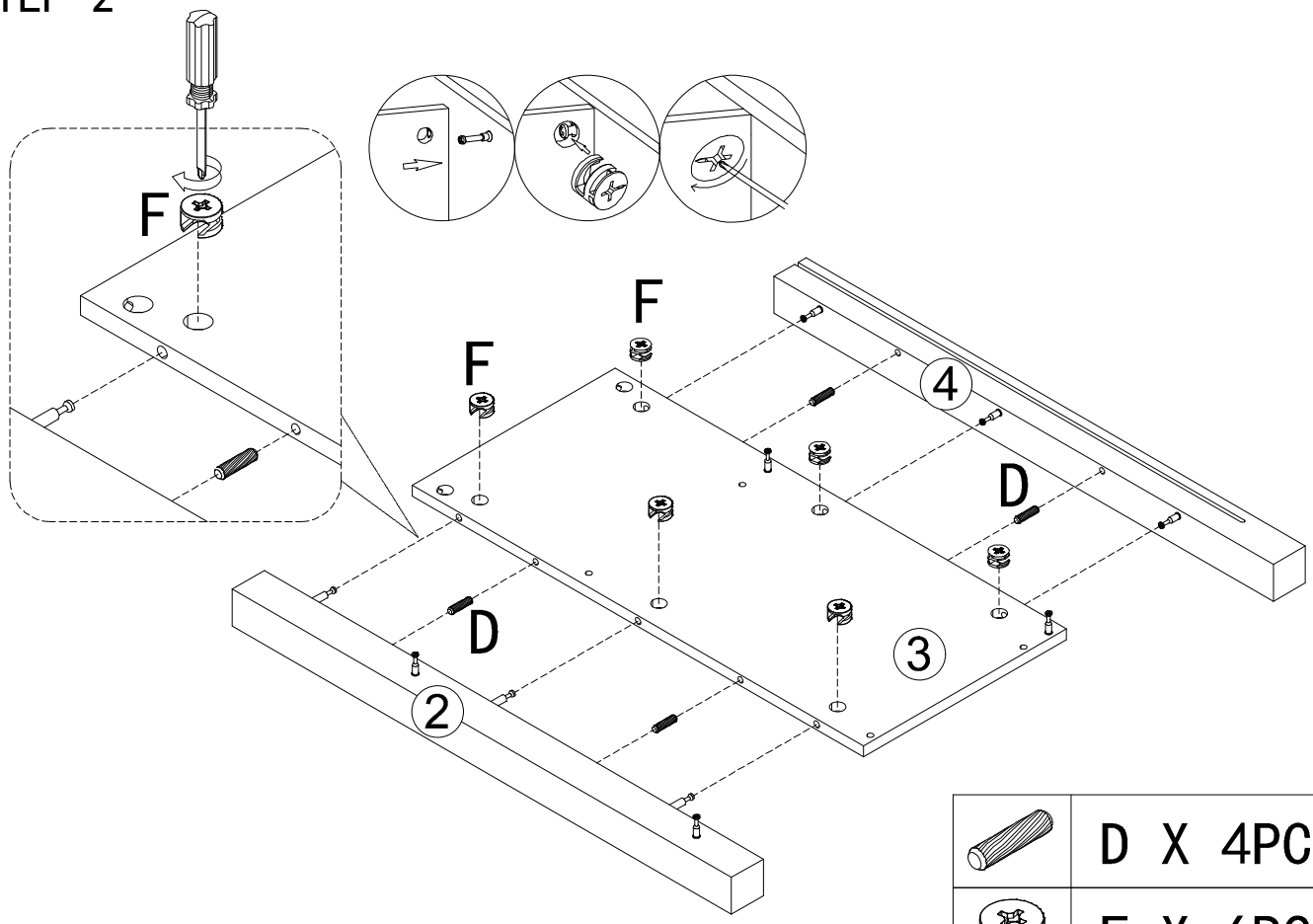

D X 4PCS

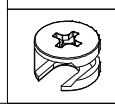

F X 6PCS

STEP 3

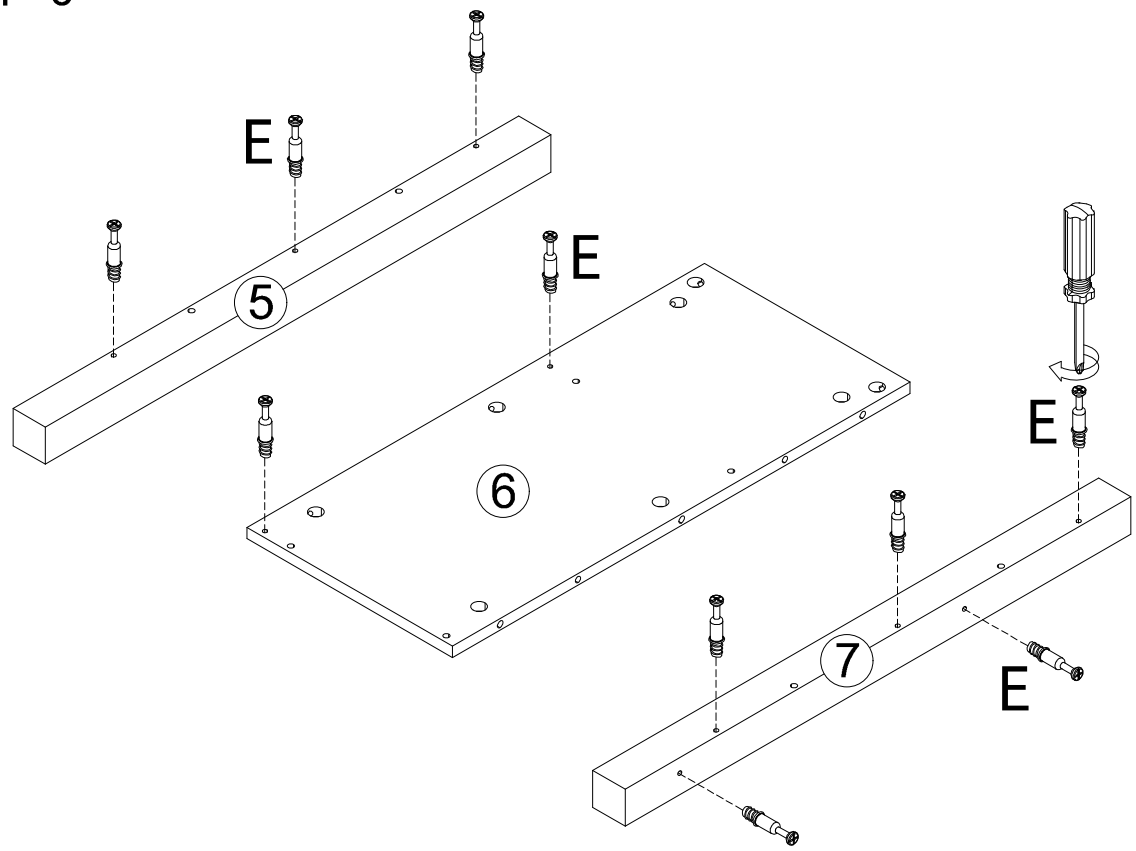

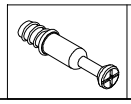

E X 10PCS

STEP 4

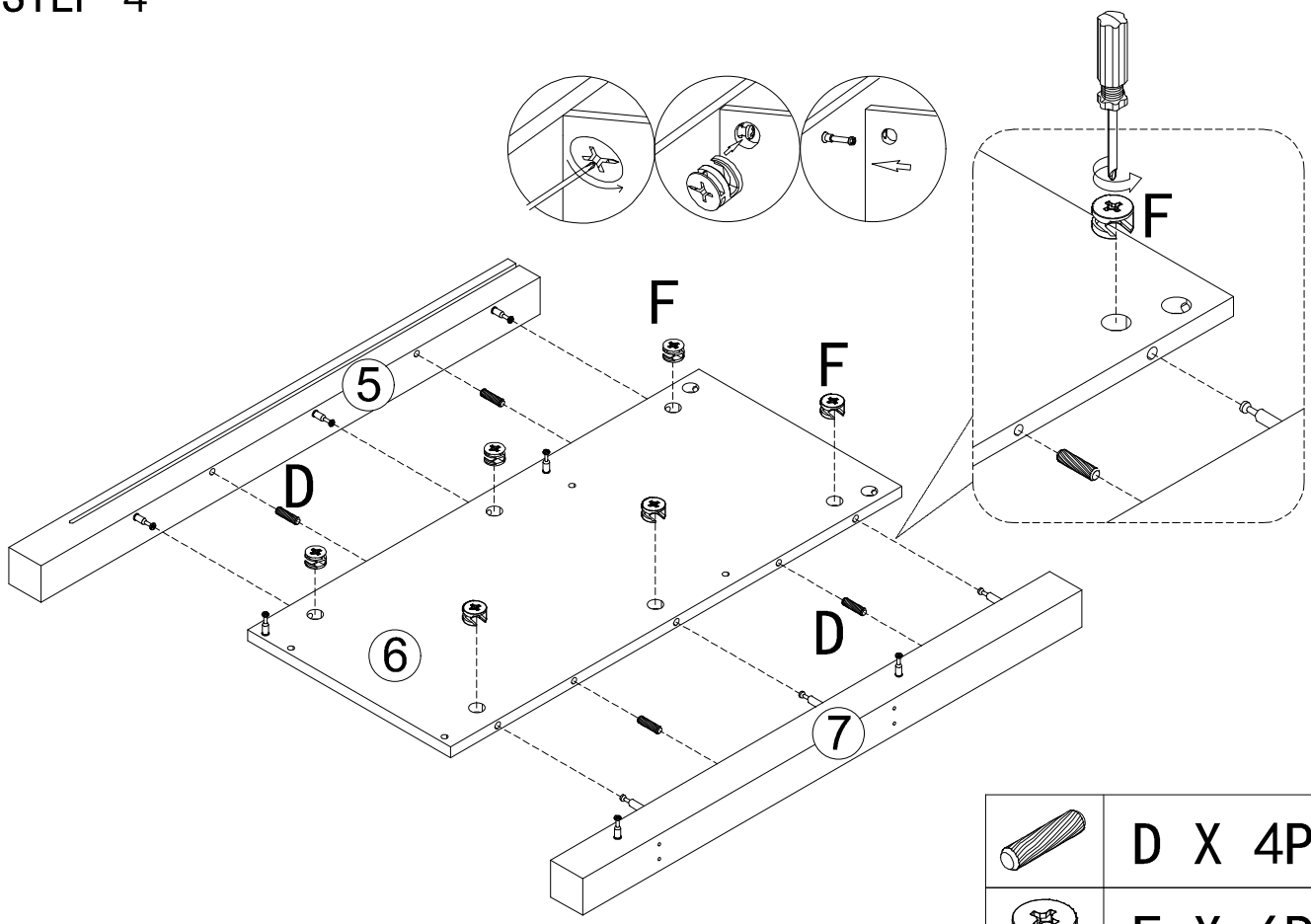

D X 4PCS

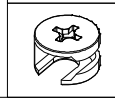

F X 6PCS

STEP 5

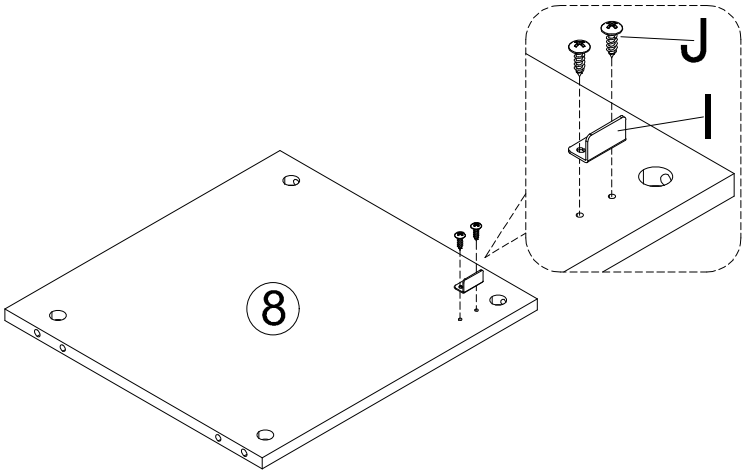

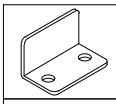	I X 1PCS
	J X 2PCS

STEP 6

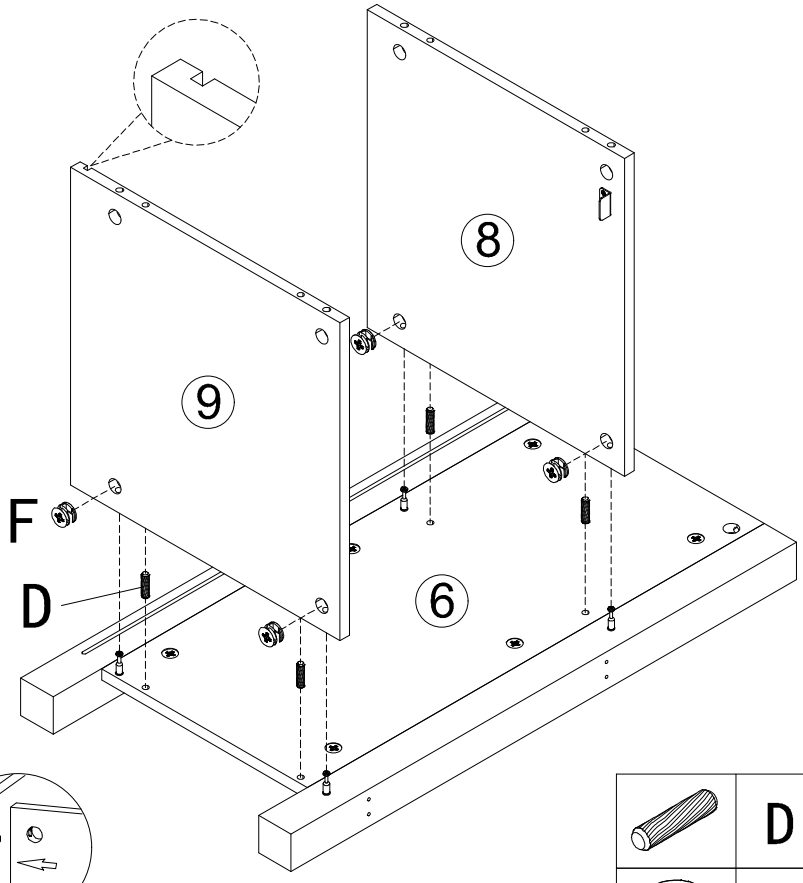

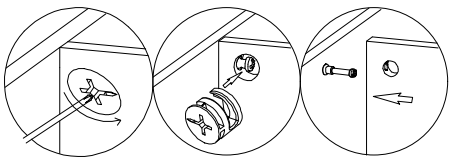

	D X 4PCS
	F X 4PCS

STEP 7

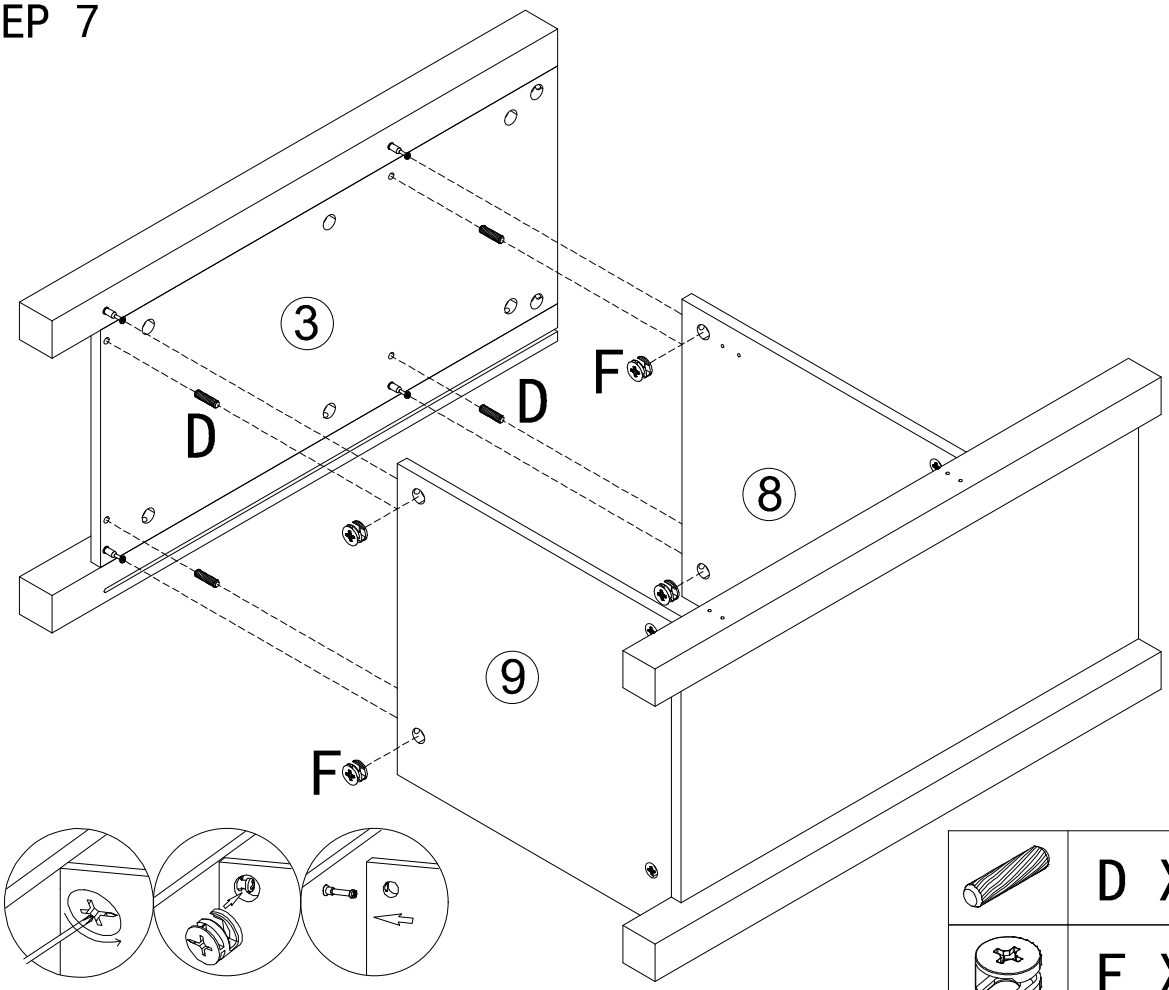

	D X 4PCS
	F X 4PCS

STEP 8

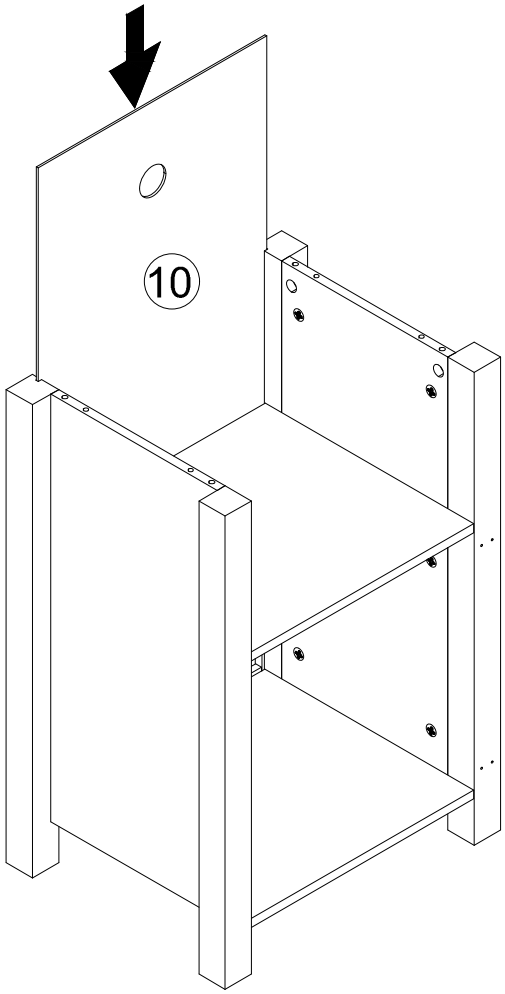

STEP 9

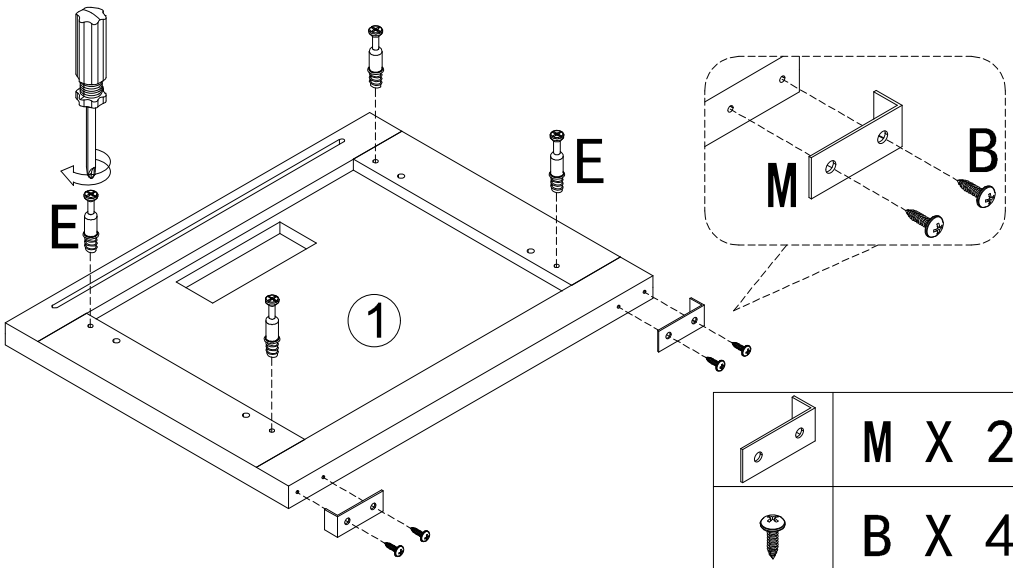

	M X 2PCS
	B X 4PCS
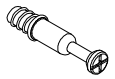	E X 4PCS

STEP 10

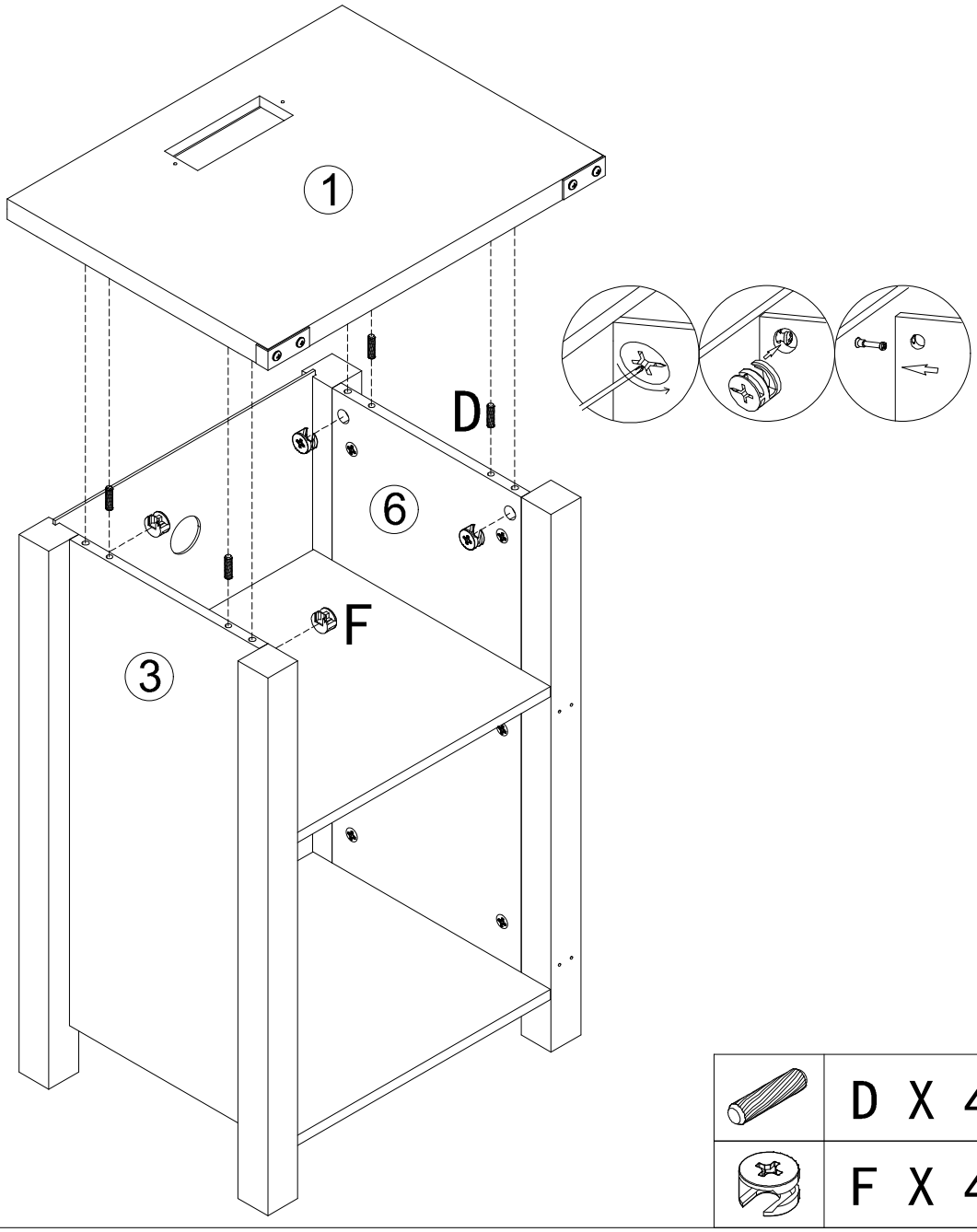

	D X 4PCS
	F X 4PCS

STEP 11

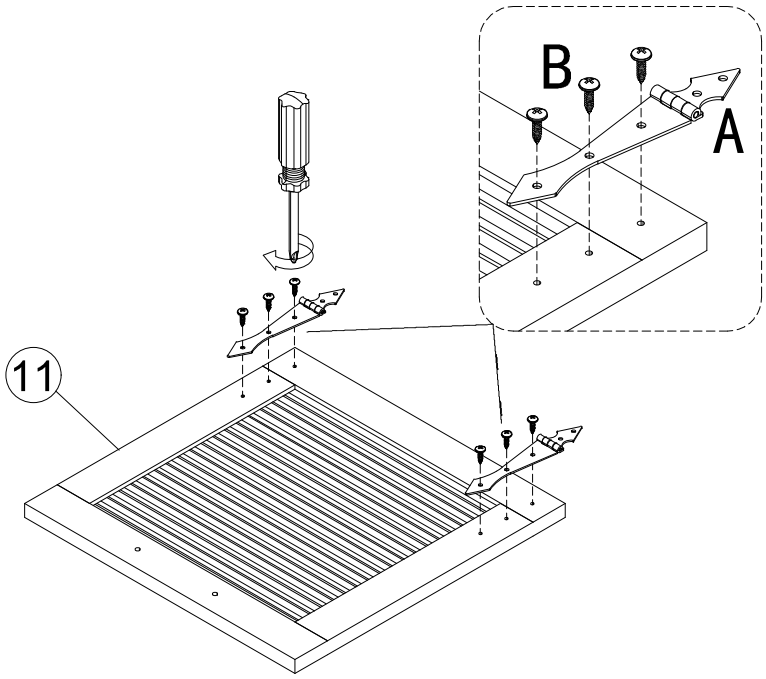

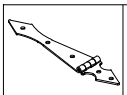	A X 2PCS
	B X 6PCS

STEP 12

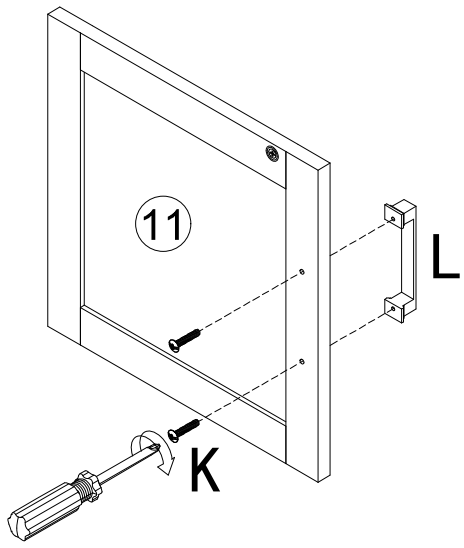

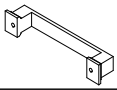	L X 1PCS
	K X 2PCS

STEP 13

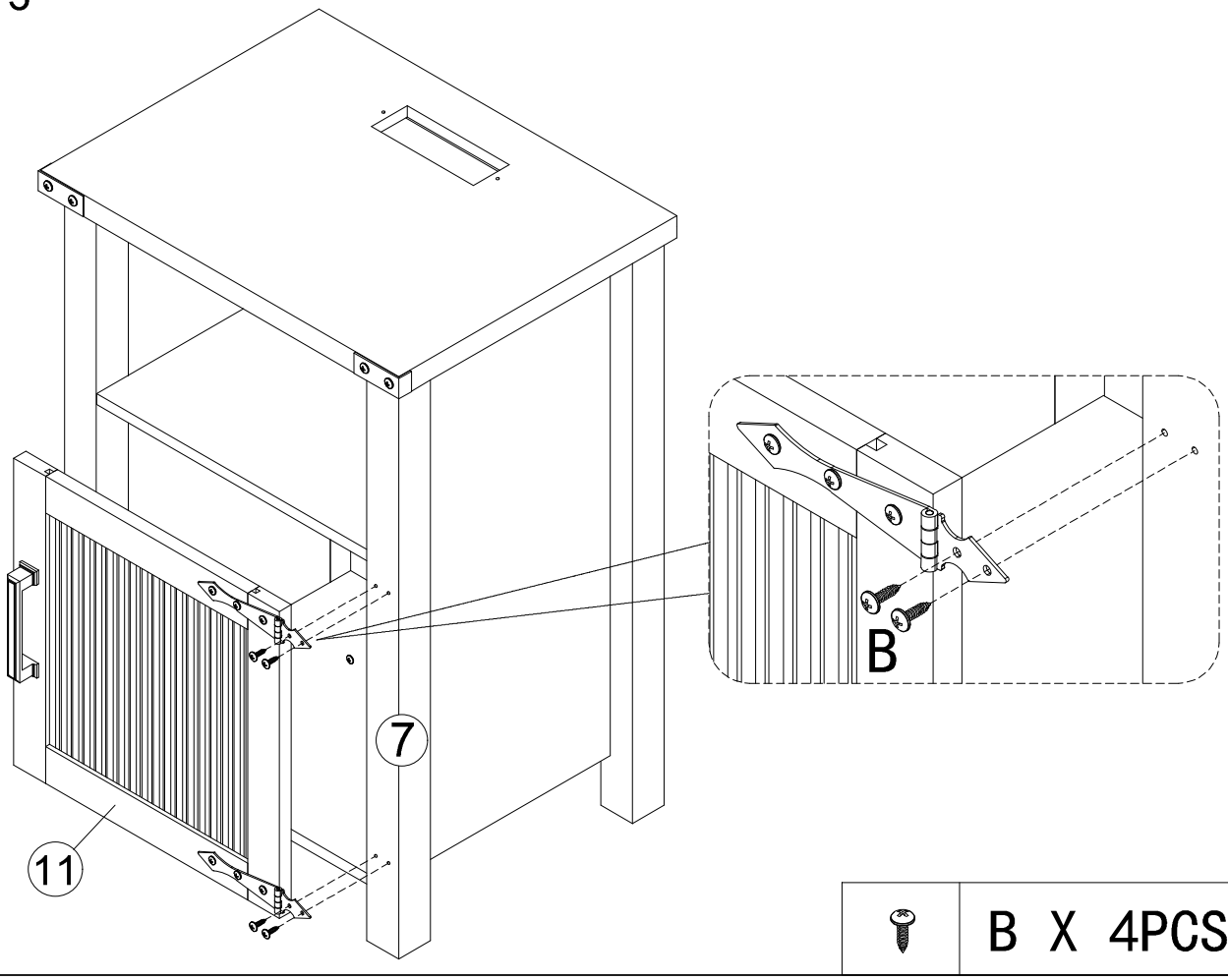

	B X 4PCS

STEP 14

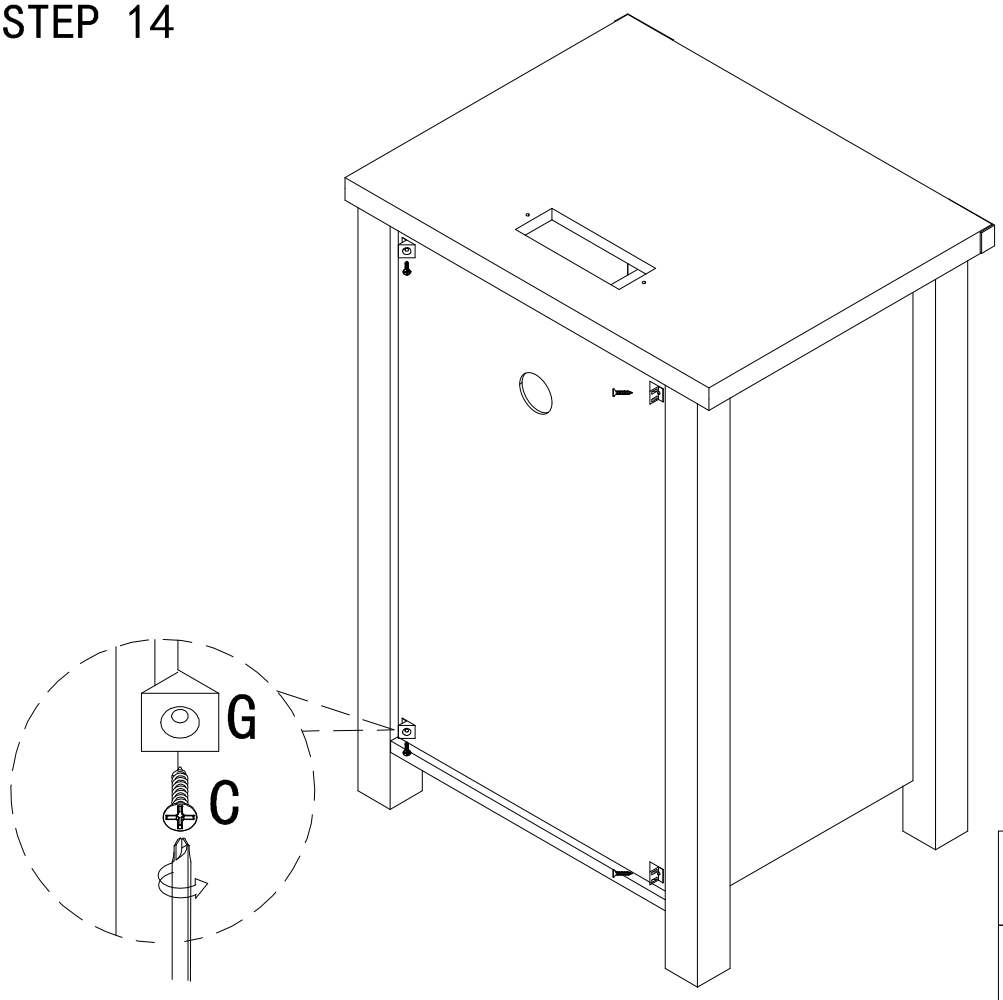

	C X4PCS
	G X4PCS

STEP 15

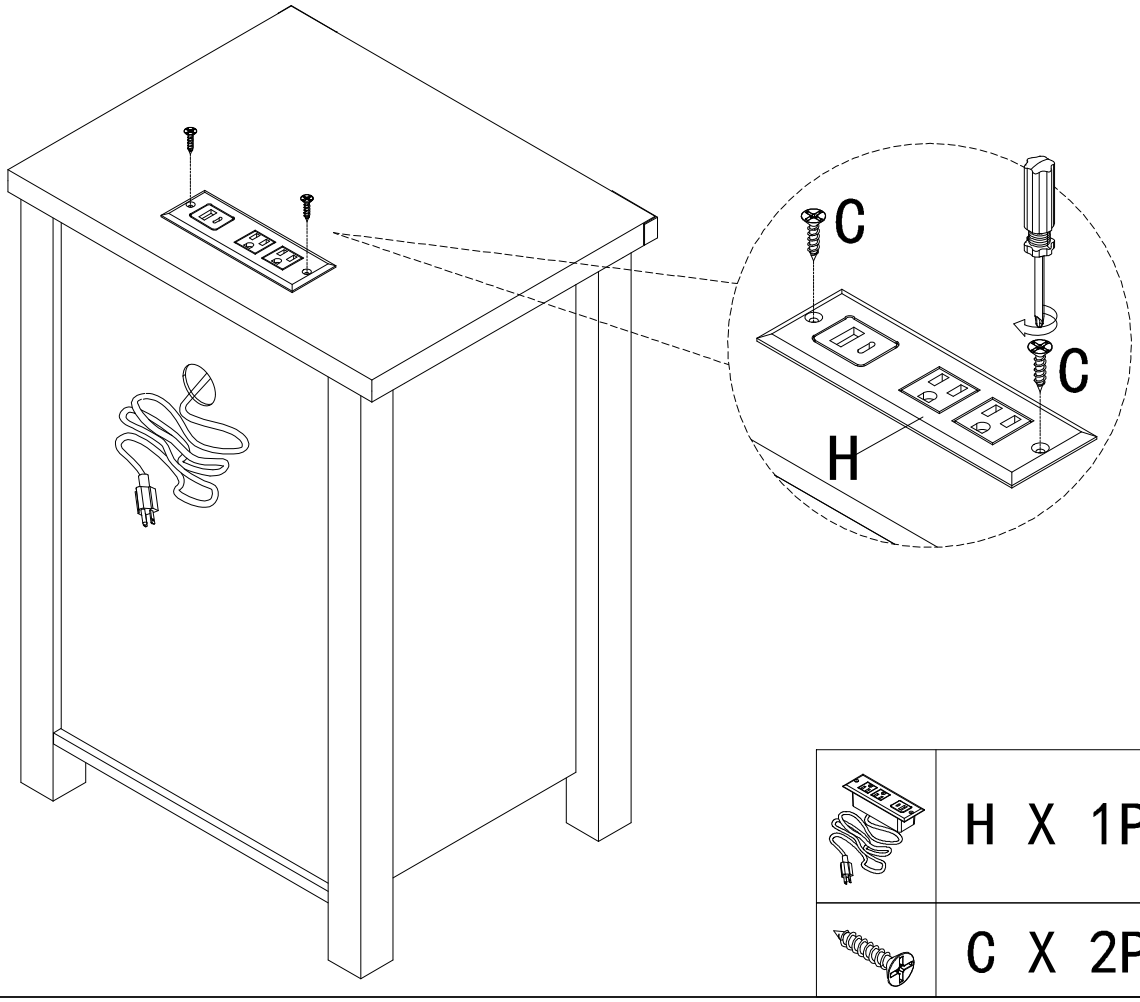

	H X 1PCS
	C X 2PCS