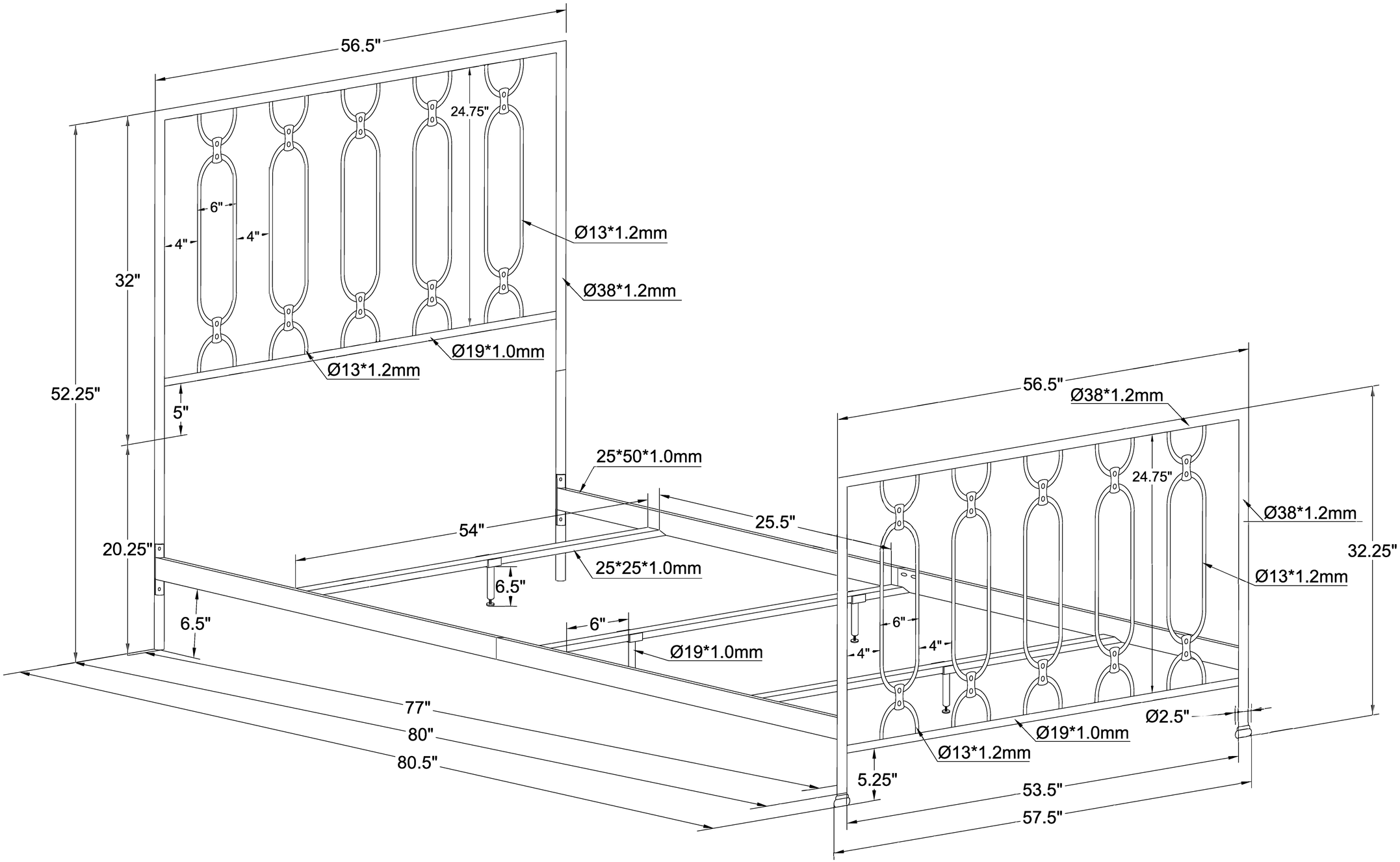
56.5"
24.75"
6"
4"
4"
Ø13*1.2mm
Ø38*1.2mm
32"
Ø19*1.0mm
Ø13*1.2mm
52.25"
5"
25*50*1.0mm
54"
25.5"
20.25"
25*25*1.0mm
6.5"
6.5"
6"
Ø19*1.0mm
77"
80"
80.5"
56.5"
Ø38*1.2mm
24.75"
Ø38*1.2mm
32.25"
Ø13*1.2mm
6"
4"
4"
Ø2.5"
Ø19*1.0mm
Ø13*1.2mm
5.25"
53.5"
57.5"