ARMARKAT® 7202

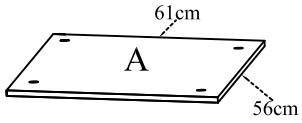

1pc

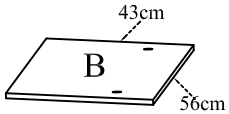

1pc

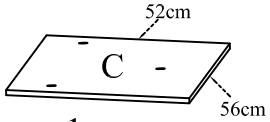

1pc

Accessory	Size	Quantity
	——	1pc
Toys	——	3pcs
V2	Ø1" / Ø25MM	2pcs
W5	Ø ⅜" × 1 ¾" / Ø10mm × 45mm	12pcs
W3	Ø ⅜" × 2 ¾" / Ø10mm × 70mm	5pcs
W1	Ø ⅜" × 1 3/16" / Ø10mm × 30mm	2pcs

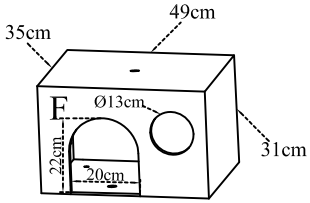

1pc

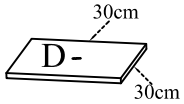

1pc

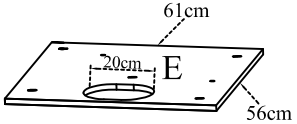

1pc

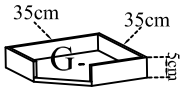

2pcs

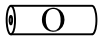

25cm* 1pc

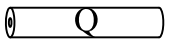

45cm* 10pcs

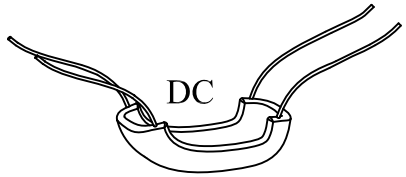

Hammock 1pc

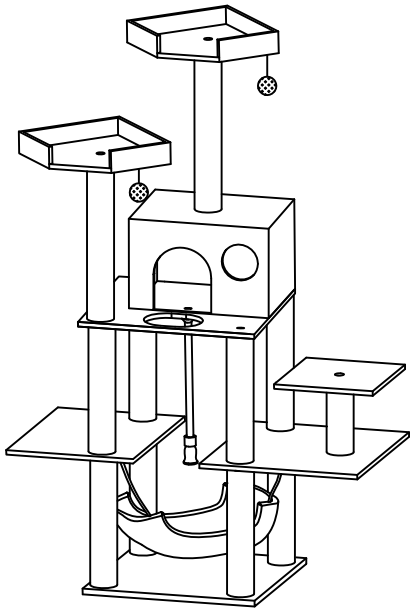

23"(58cm)*1pc

Packing List

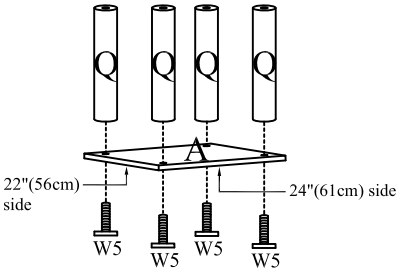

step1

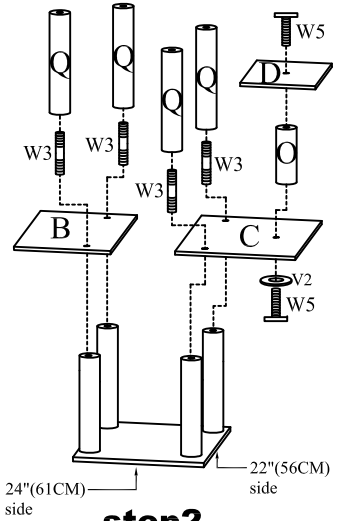

step2

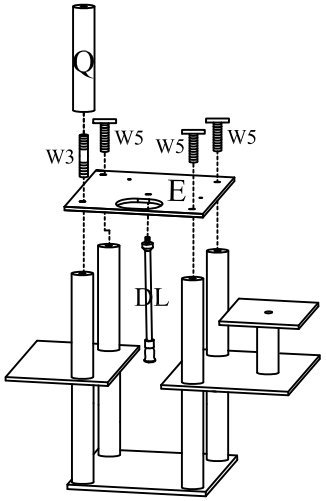

step3

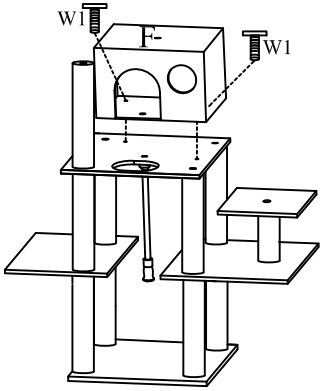

step4

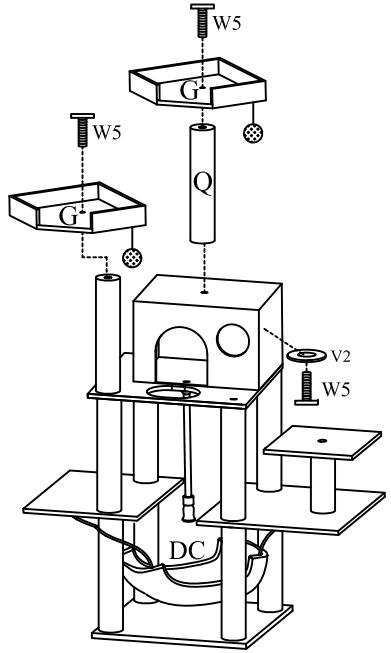

step5