ASSEMBLY INSTRUCTION

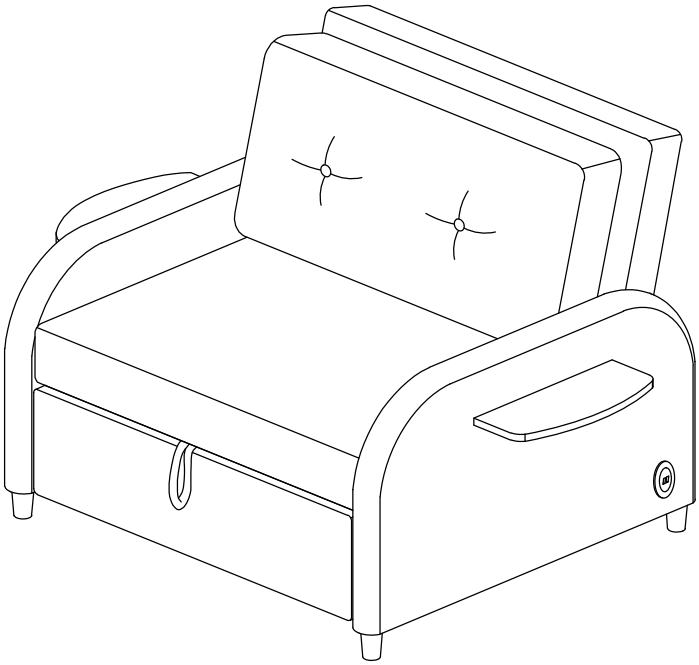

PARTS

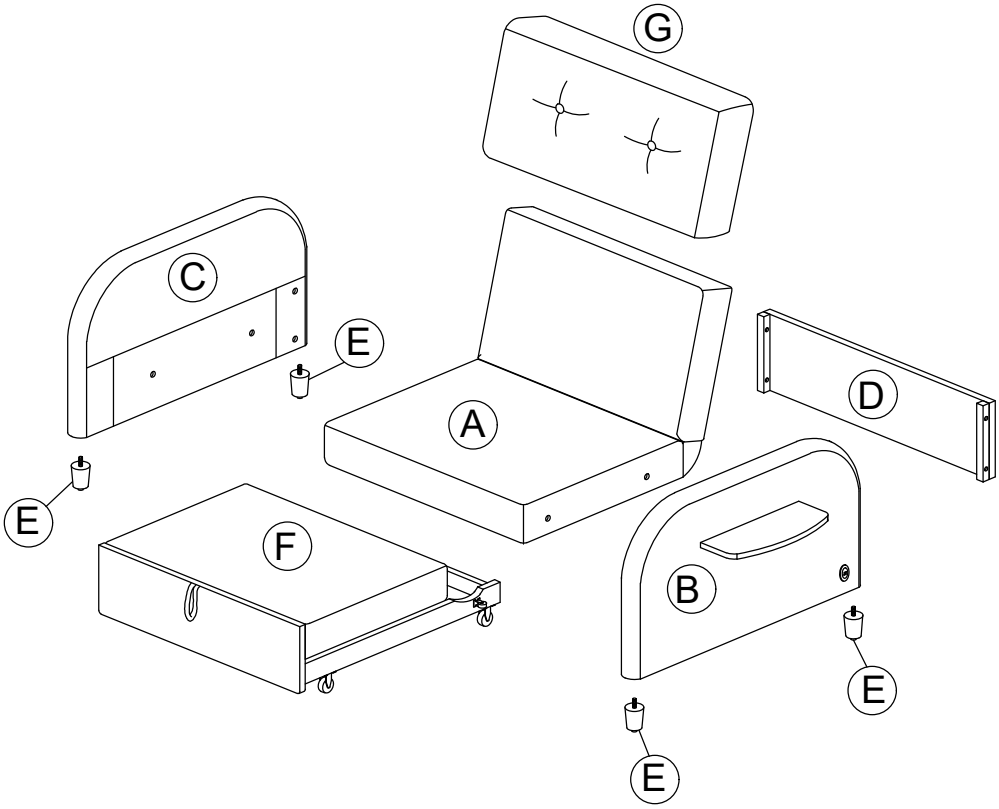

PARTS LIST

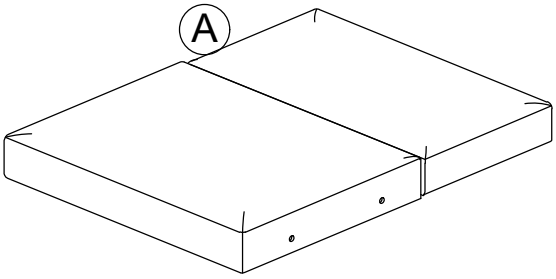

Chair Body
X 1PC

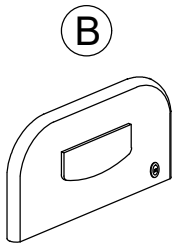

Left Arm X 1PC

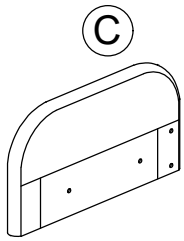

Right Arm X 1PC

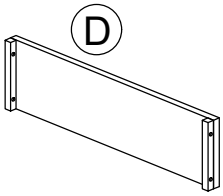

Back Frame
X 1PC

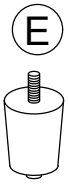

Legs X 4PCS

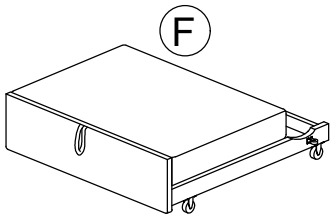

Pull out Bed X 1PC

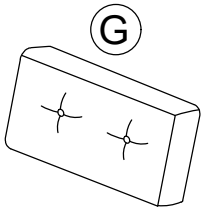

Pillow X 1PC

HARDWARE

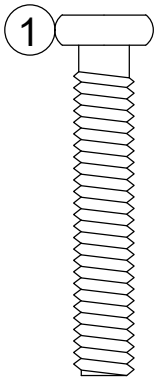

Bolt
5/16" X 2-1/2" X4

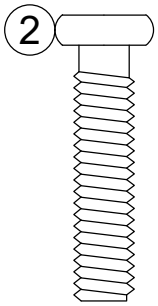

Bolt
5/16" X 2" X4

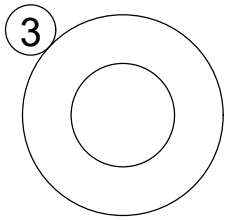

Washer
5/16"X19mm X 8

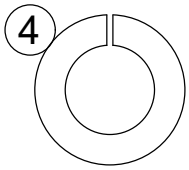

Spring Washer
X 8

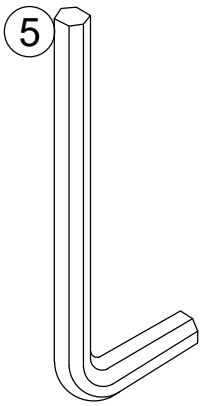

Allen Key 5 mm

STEP 1:

1.1 Attach E x 4 to B x1 & C x 1.

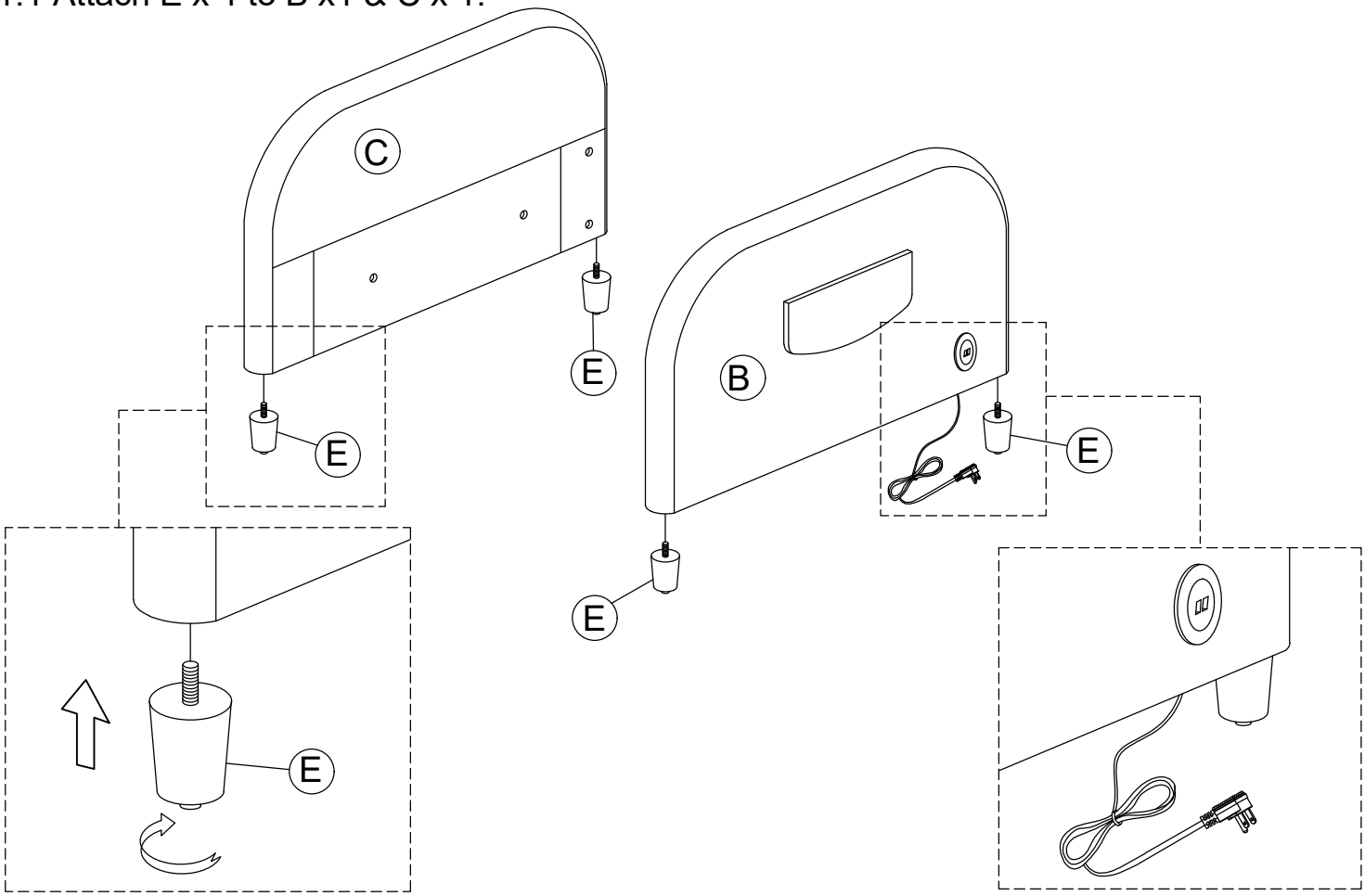

STEP 2:

2.1 Attach A x1 to D x1 & C x1 with ①,③,④.
2.2 Attach B x1 to D x1 & A x1 with ②,③,④.

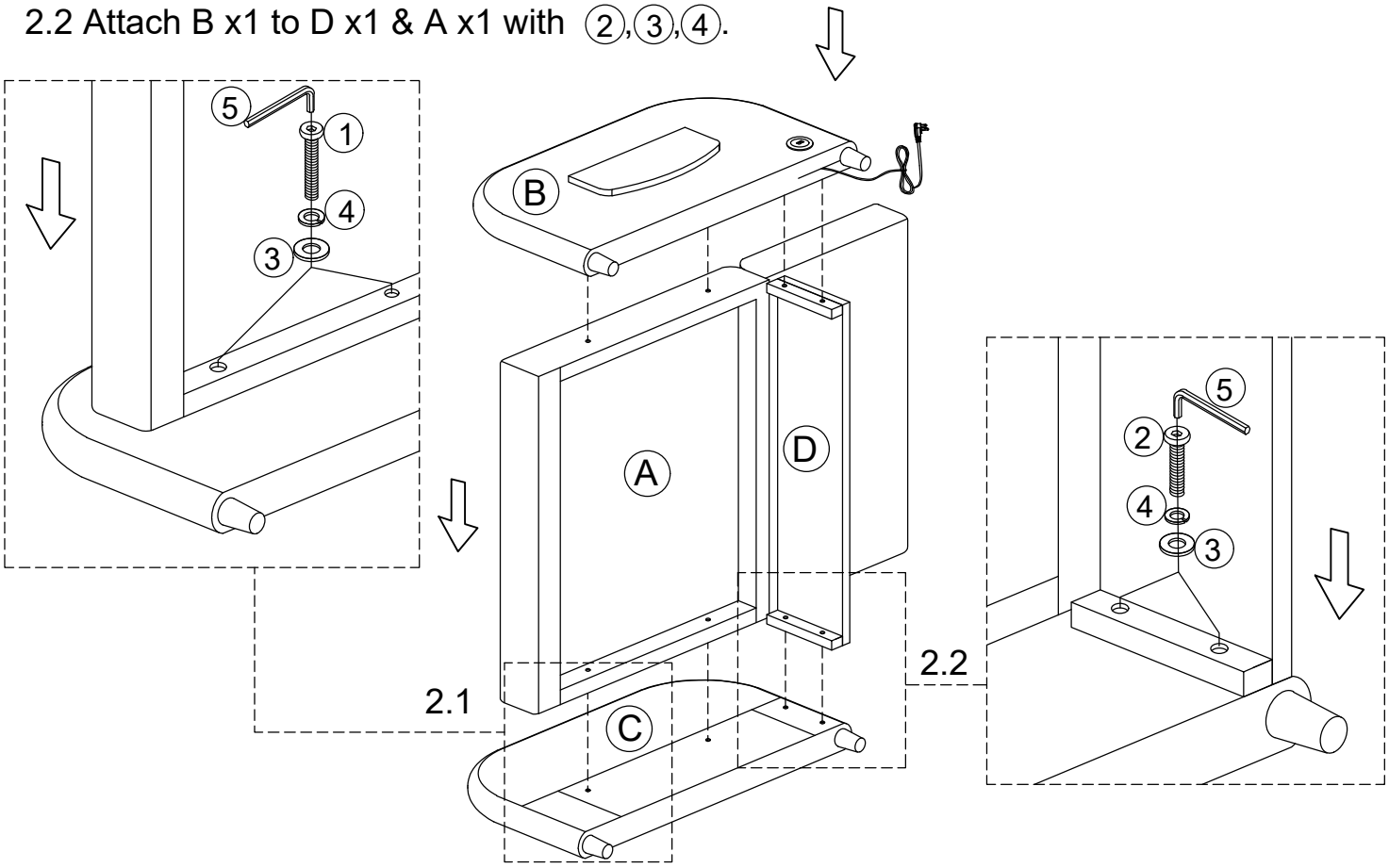

STEP 3:

1.1 Attach F x 1 to A x1.

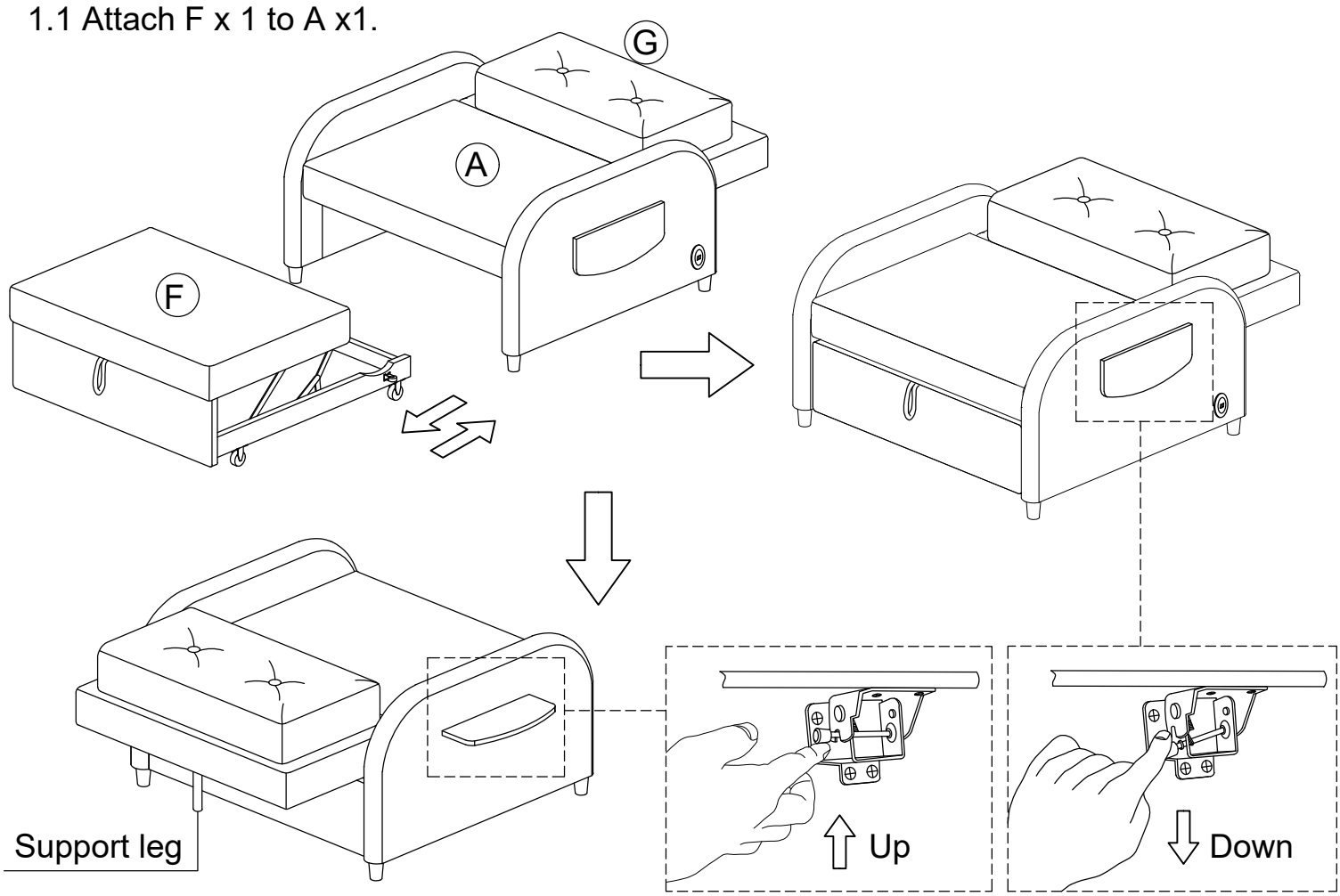

STEP 4:

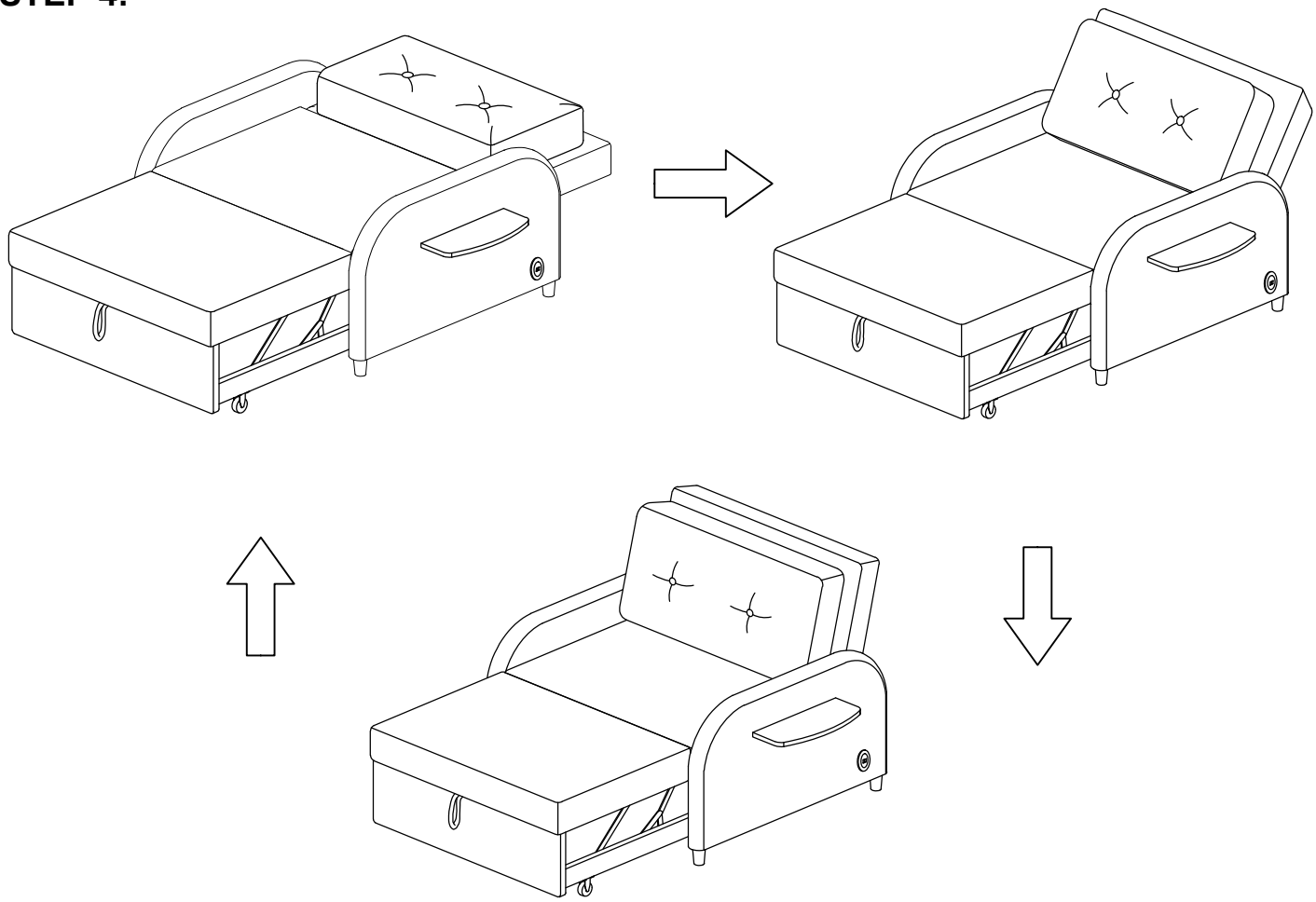

COMPLETE

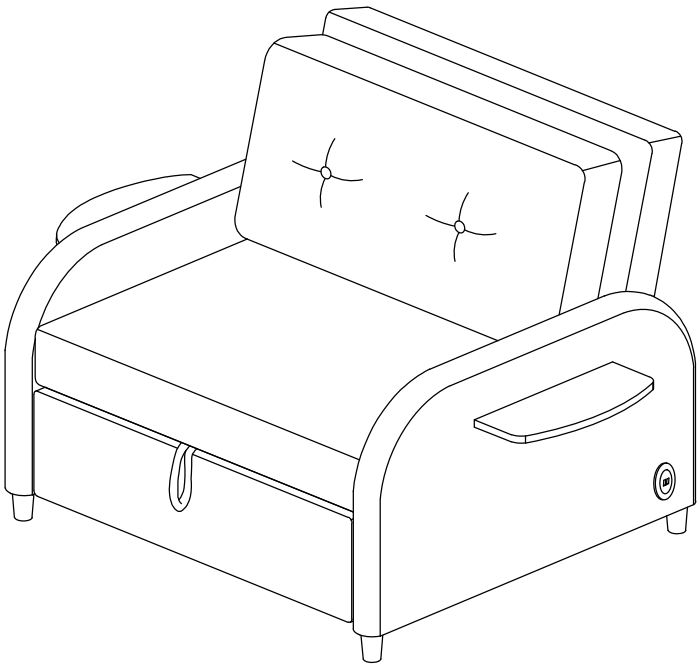

Helpful Hints
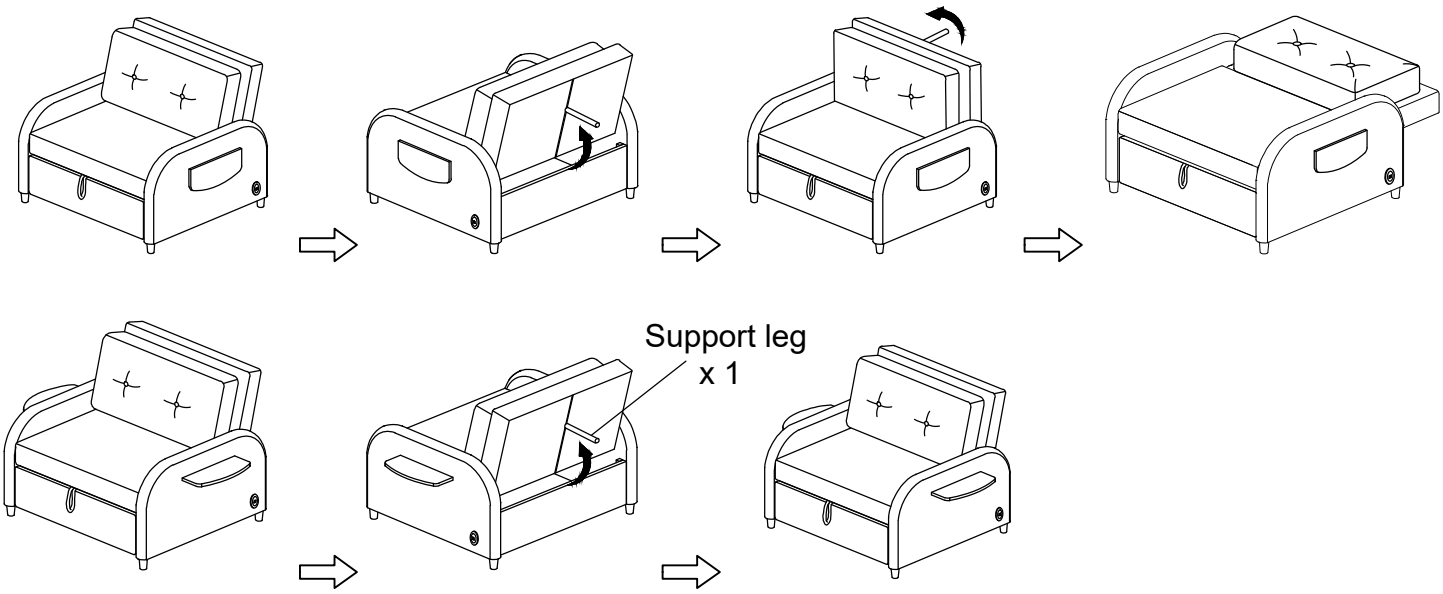
- Your futon can transform between a Sofa.
- Move your new furniture carefully, with two people lifting and carrying the unit to its new location.
- Your furniture can be disassembled and reassembled to move.
- Clean the product with a soft damp cloth. DO NOT use harsh chemicals or abrasive cleaners.