ASSEMBLY INSTRUCTIONS
20 INCH BATH VANITY (COMBO)

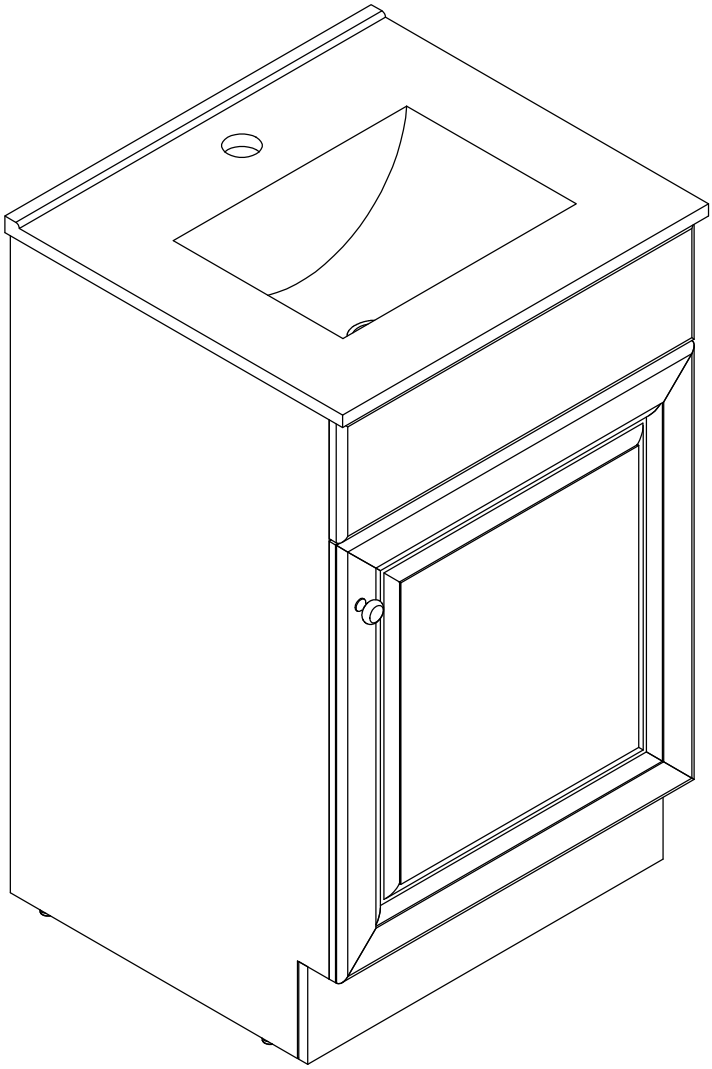

Thank you for purchasing this quality product. Be sure to check all packing material carefully for small parts which may have come loose inside the carton during shipment. Separate, identify and count all parts and hardware. Compare with the parts list to be sure all parts are present.
"DO NOT TIGHTEN SCREWS UNTIL COMPLETELY ASSEMBLED"

* Use of power tool to assemble this product will invalidate any claim and damage this product making unsafe !!!
* Please assemble on a clean soft surface to avoid damage.

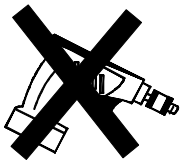

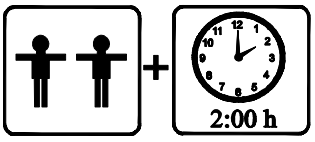

Tools Required

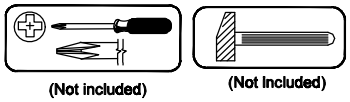

(Not included) (Not included)

IMPORTANT:

PLEASE READ INSTRUCTION BEFORE STARTING THE ASSEMBLY

PLEASE DO NOT RETURN TO STORE

Please do not return this product to the retailer!!
We are able to assist you in ANY way

If you find that you have any trouble with assembly or missing or damaged parts please contact the seller.

Before Installation

Important – Please read these instructions fully before starting assembly

Thank you for purchasing this quality product. Be sure to check all packing materials carefully for small parts, which may have come loose inside the carton during shipment. Identify and count all items according to the PARTS LIST and/or HARDWARE LIST shown below. Check you have all the components and tools listed on the following pages.

- We recommend that you assemble this product with the assistance of another person; this will make the assembly easier, and will help eliminate damage to the product or injury to persons during assembly.
- Please do not over tighten screws or bolts until the assembly is completed.
- Keep children and animal away from the work area, small parts could choke if swallowed.
- Please put all parts on a non-abrasive floor before assembly,and follow the assembly steps to assemble your newly purchased product correctly and efficently.

Cam Lock Assembly Instructions

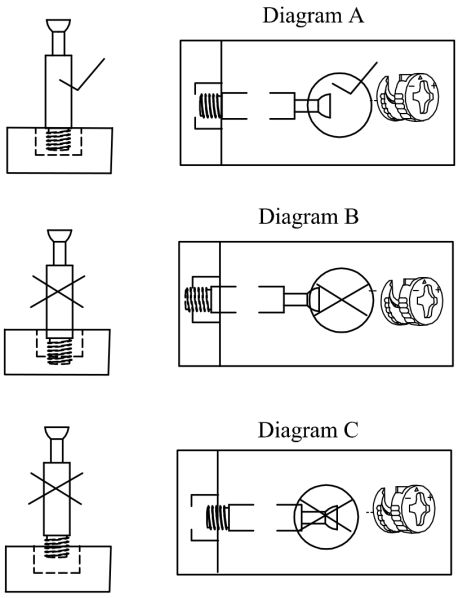

Insert Cam Bolt into hole as shown in diagram A.

Make sure not to insert the Cam Bolt:
Too deep as shown in figure B as this will cause the Cam Lock to be misaligned and unable to interlock properly.

Also avoid inserting the Cam Bolt too close to the surface of the hole as shown in figure C, as this will cause the Cam Lock to be too loose, and not interlock properly.

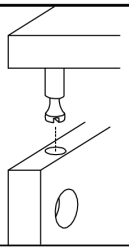

Connect the panels together.

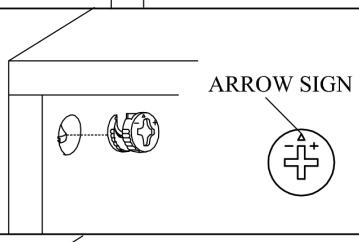

Insert the Cam Lock so the side opening fits over the head of the Cam Bolt.

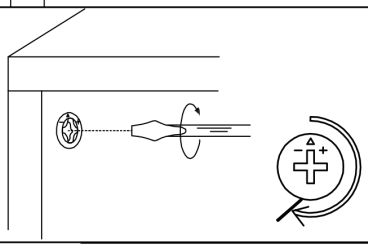

To tighten the Cam Lock, turn it clockwise on half a turn with a flat screwdriver.
**Do not use an automatic screwdriver as it may bend or break if too much power is imposed.*

Detail View - CABINET

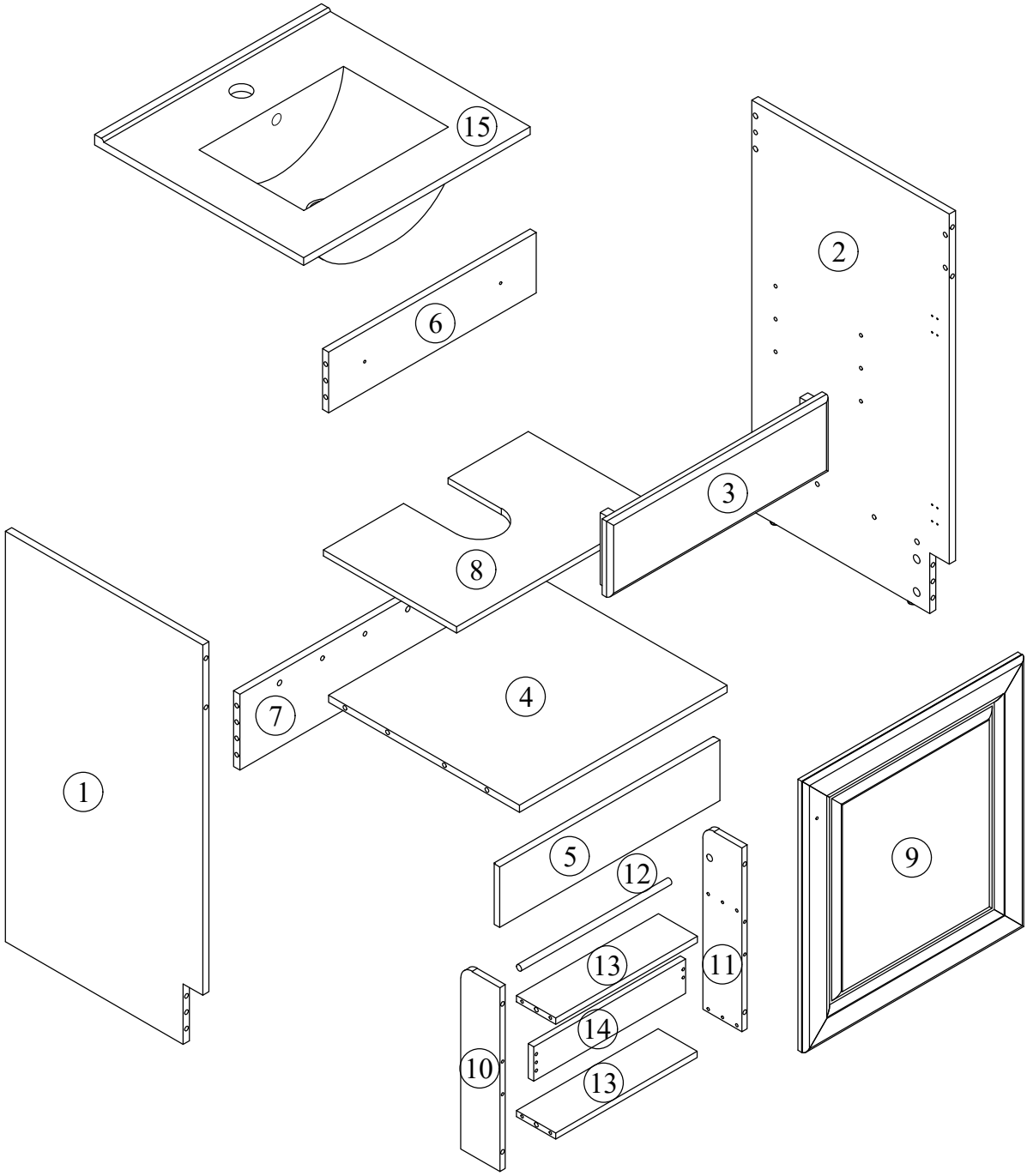

Identifying the Hardware -Indentify the hardware using the illustrations below.

Part List

1 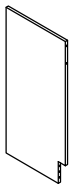 Side Panel (L) - 1pc	2 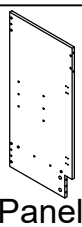 Side Panel (R) - 1pc
3 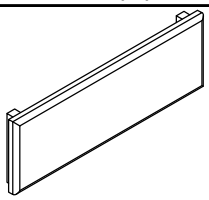 Top Frame Front - 1pc	4 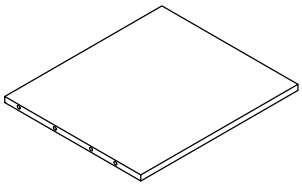 Bottom Panel - 1pc
5 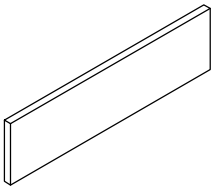 Bottom Panel Front - 1pc	6 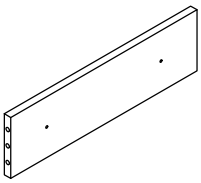 Back Panel Rear - 1pc
7 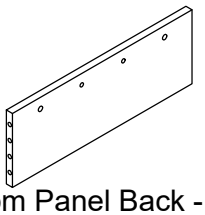 Bottom Panel Back - 1pc	8 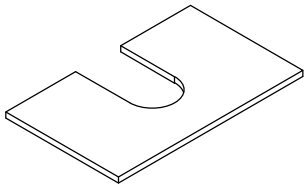 Adjustable Shelf - 1pc
9 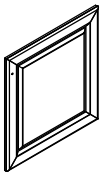 Door Cabinet - 1pc	10 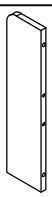 Panel Left Side Door - 1pc
11 Panel Right Side Door - 1pc	12 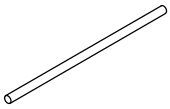 Round Bar Door - 1pc
13 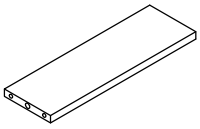 Panel Mid Door - 2pcs	14 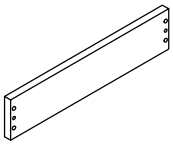 Back Panel Door - 1pc
15 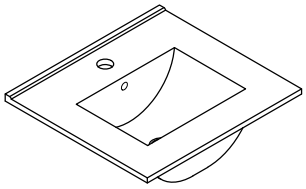 Sink - 1pc	

Hardware List

A ø6x35mm	B ø14.5x12mm	C ø14.5x9.5mm
Three in one bolts - 28pcs	Three in one lock - 18pcs	Three in one lock - 10pcs
D ø13x1/4"x28mm	E ø1/4"x16x1mm	F ø8x30mm
Hex-Head bolts - 4pcs	Washer 4pcs	Wood dowel - 18pcs
G ø6x30mm	H	I
Wood dowel - 16pcs	Laminate pad - 4pcs	Damping hinge - 2pcs
J ø7xø3.5x15mm	K	L ø5/32"x25mm
Flat head screw - 12pcs	Handle 1pc	Handle screw 1pc
M ø10xø5x50mm	N	O ø1/4"x16x1mm
Round head screw - 2pcs	Plastic wall bolts - 2pcs	Washer 2pcs
P 4mm		
Allen Wrench - 1pc		

STEP: 1

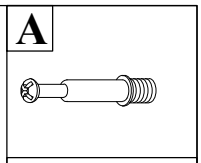

18PCS

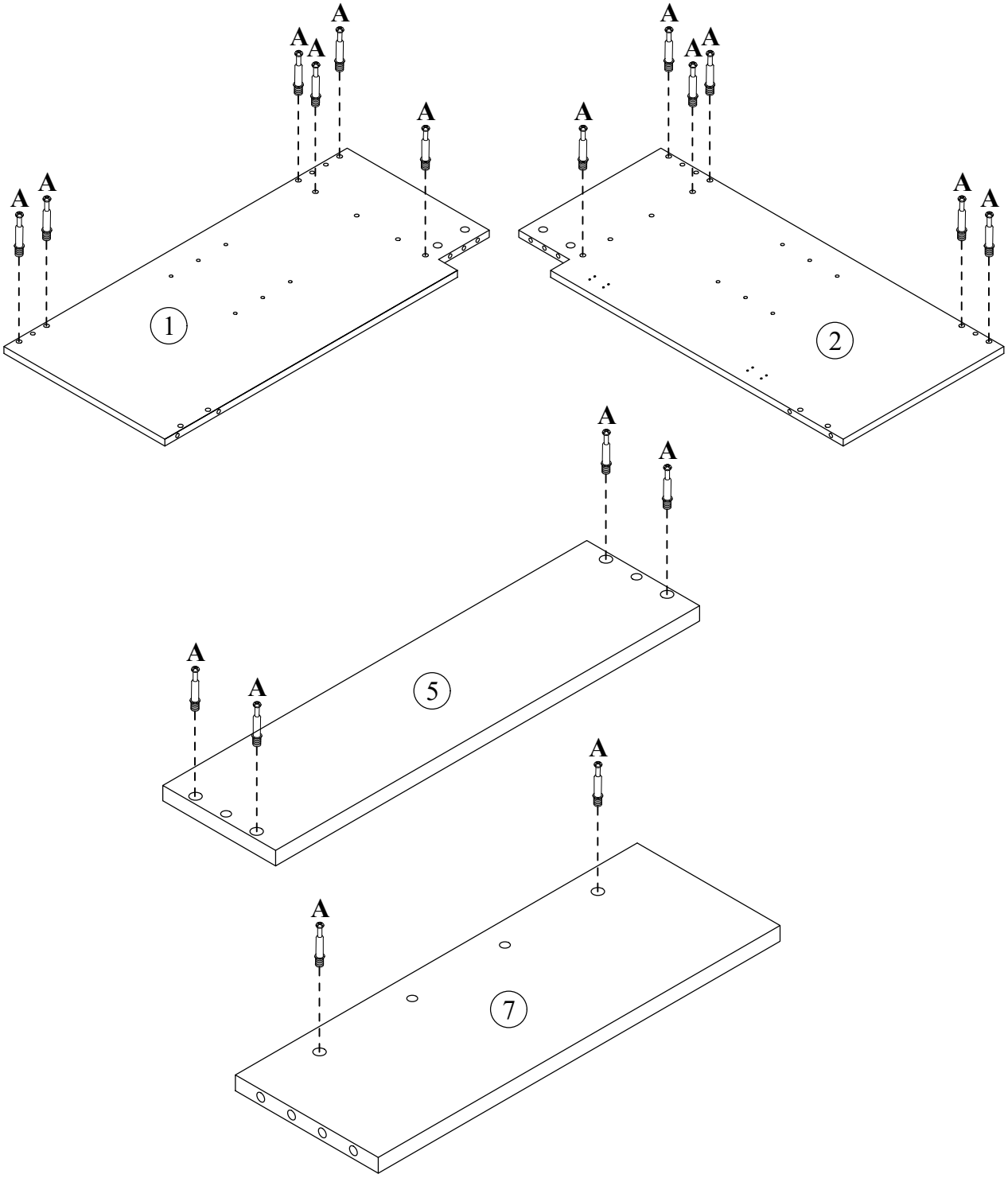

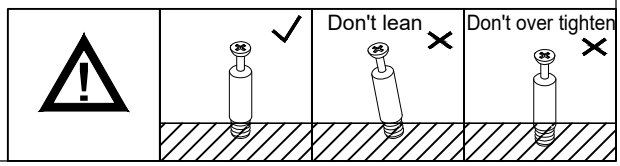

STEP: 2

B	F
2PCS	2PCS

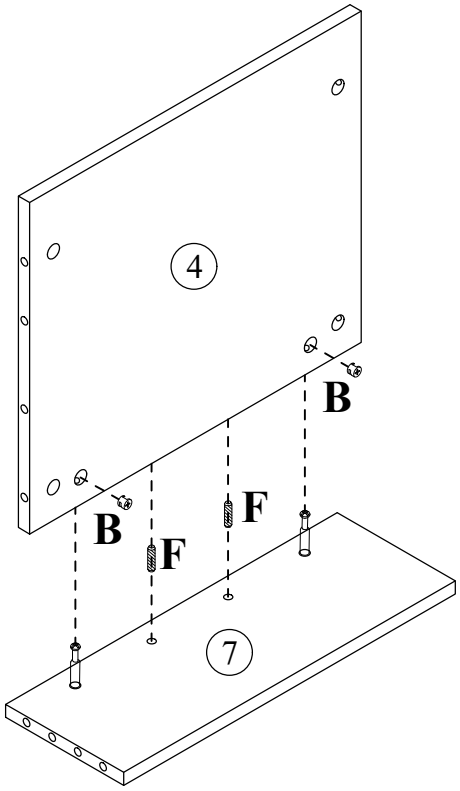

STEP: 3

B	F
6PCS	5PCS

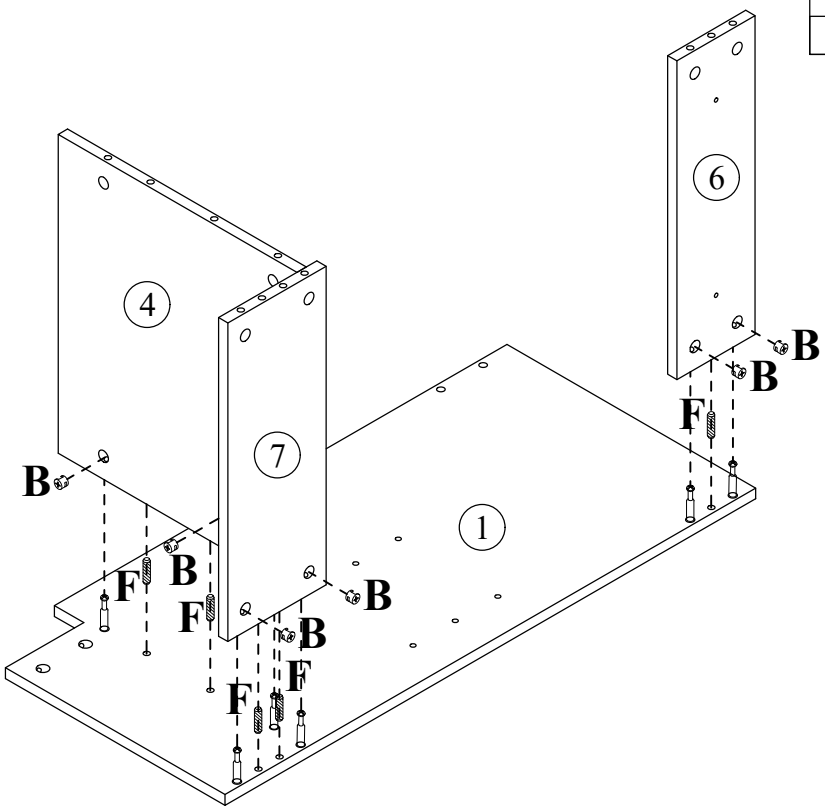

STEP: 4

B	F
6PCS	5PCS

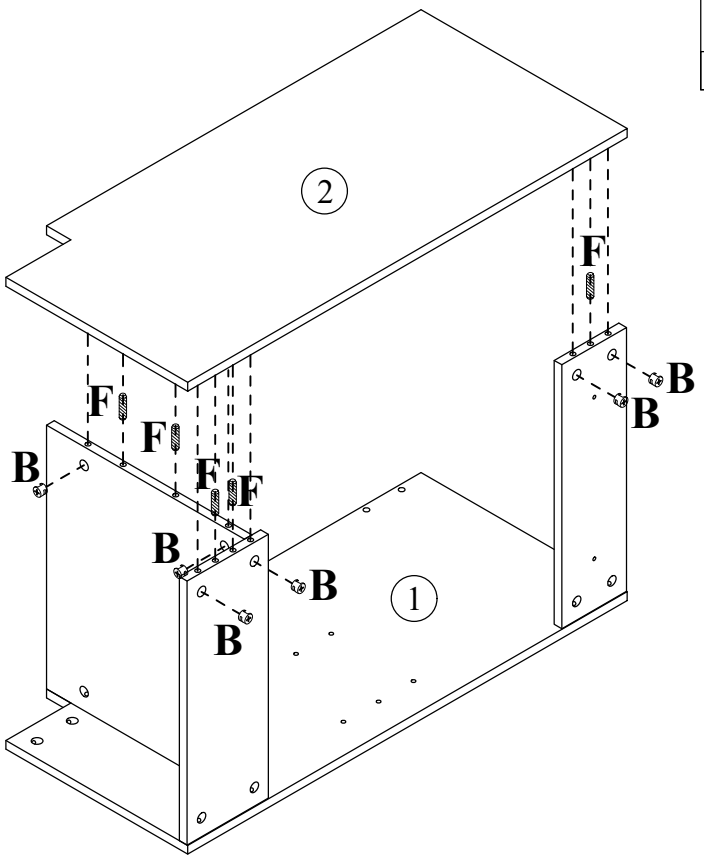

STEP: 5

B	F
4PCS	2PCS

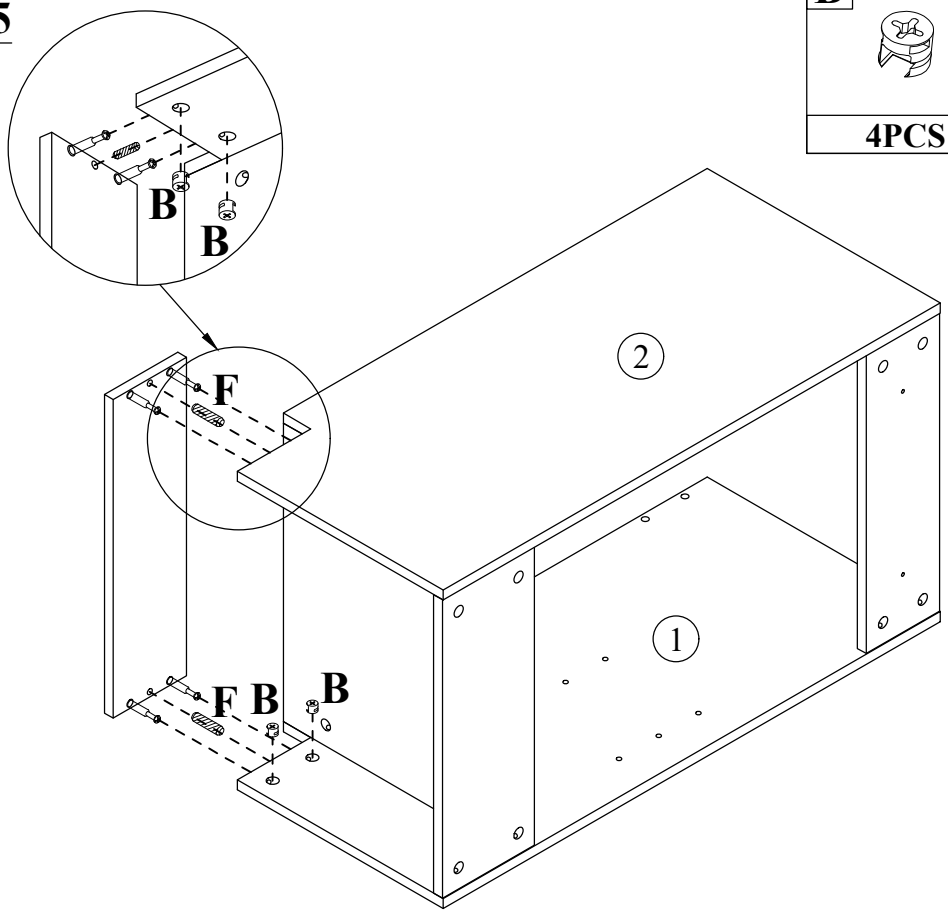

STEP: 6

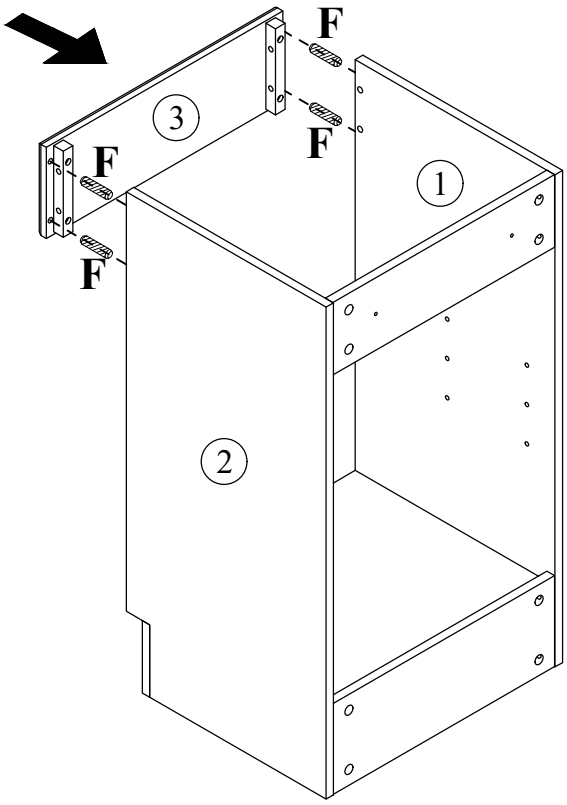

F
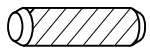
4PCS

STEP: 7

P	D	E
		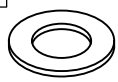
1PC	4PCS	4PCS

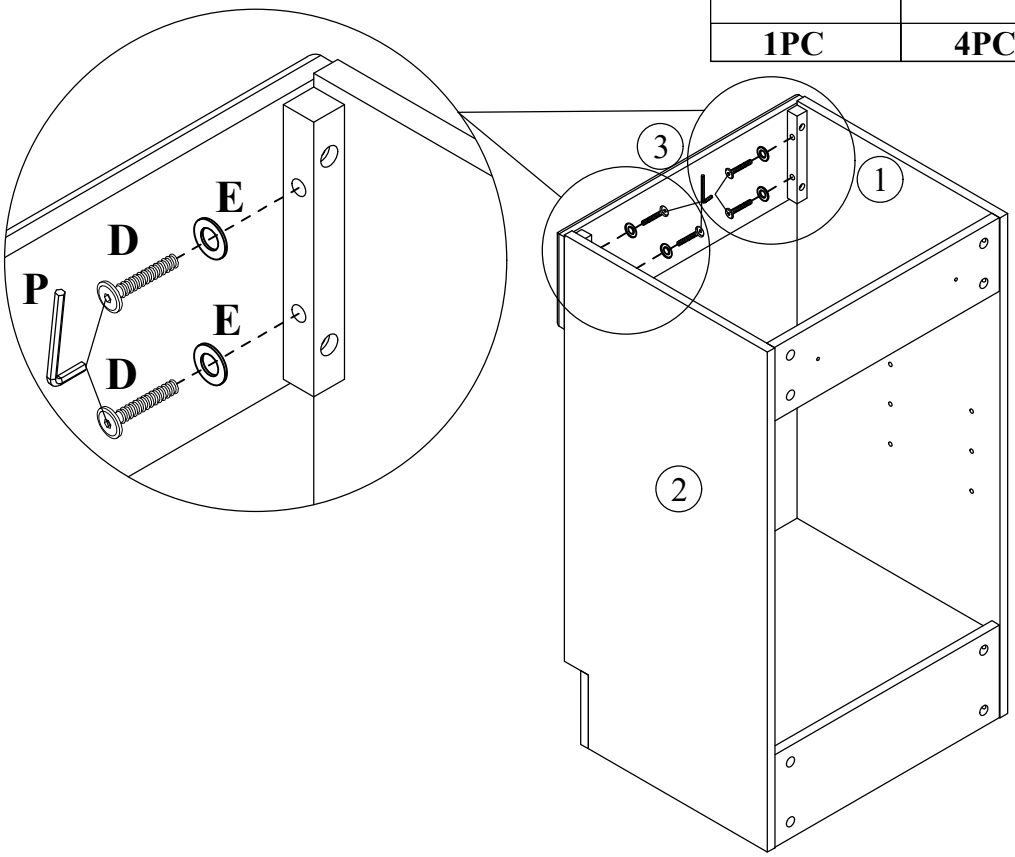

STEP: 8

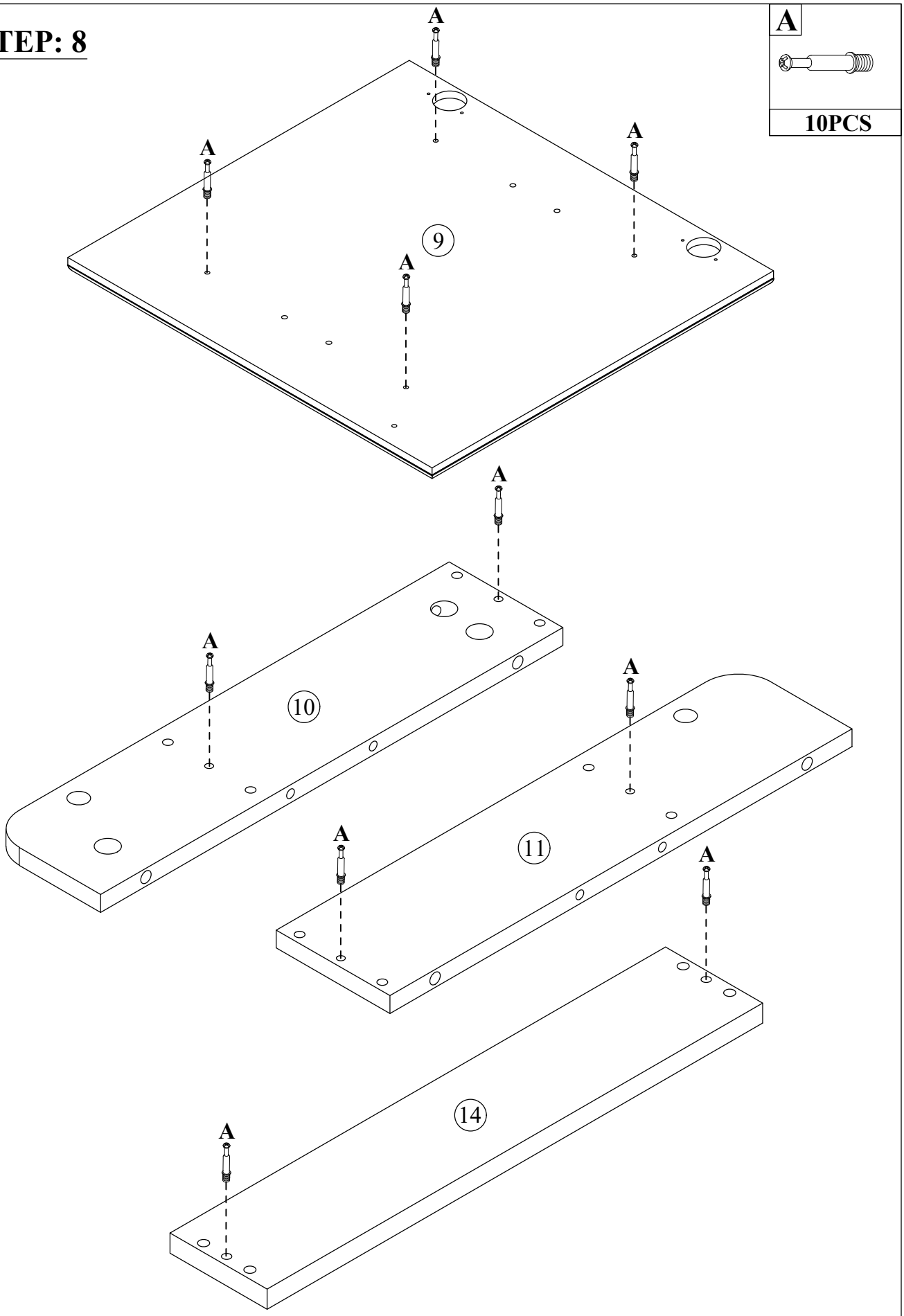

STEP: 9

C	G
6PCS	12PCS

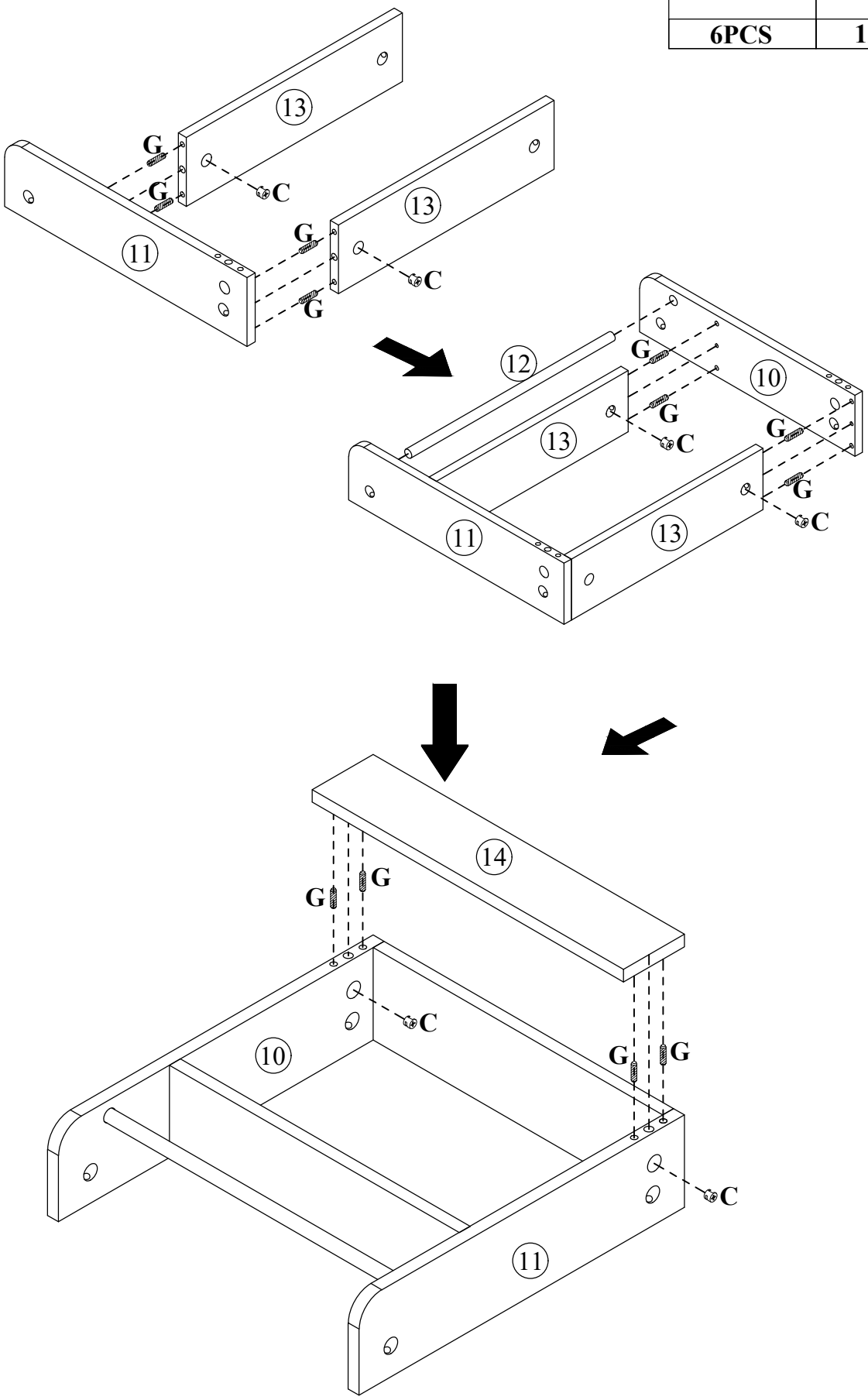

STEP: 10

C	G	I	J
4PCS	4PCS	2PCS	4PCS

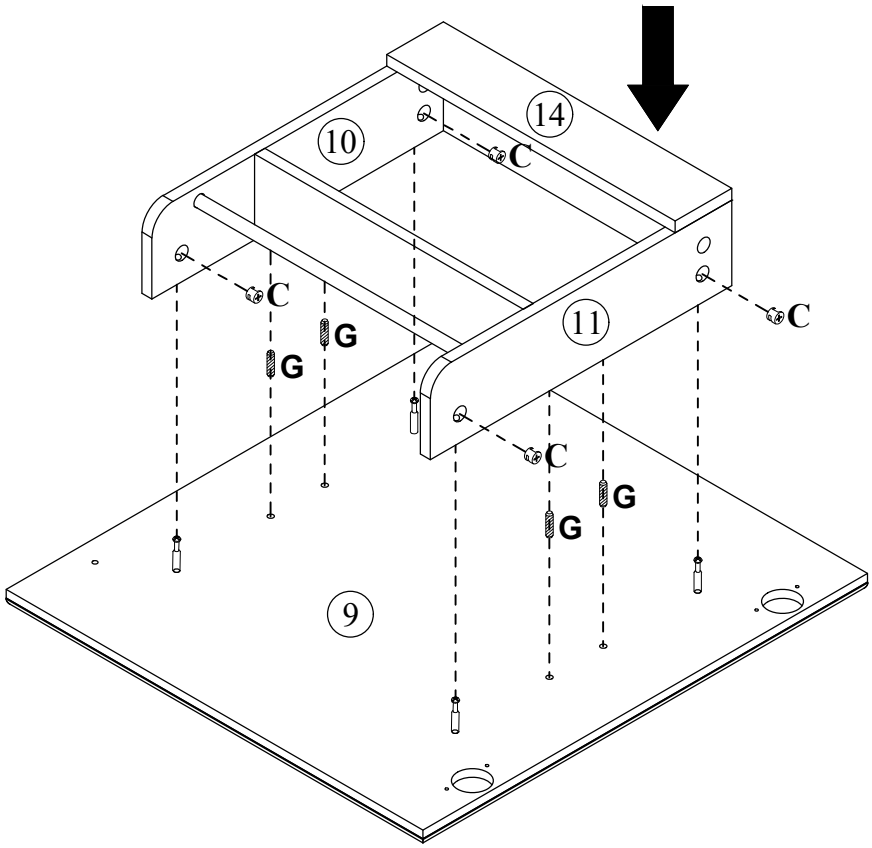

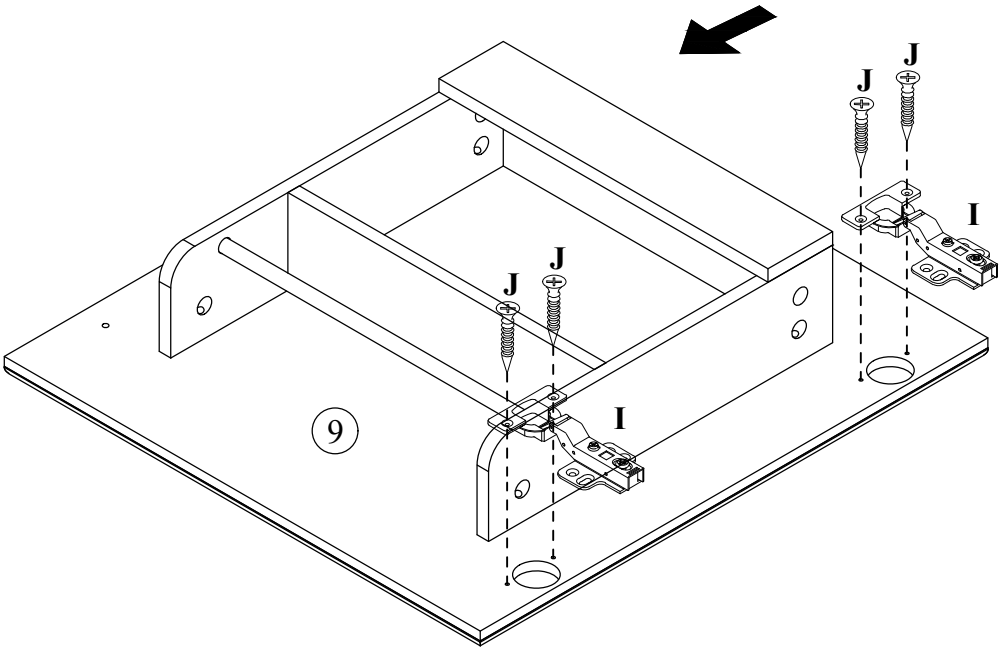

STEP: 11

M	N	O
2PCS	2PCS	2PCS

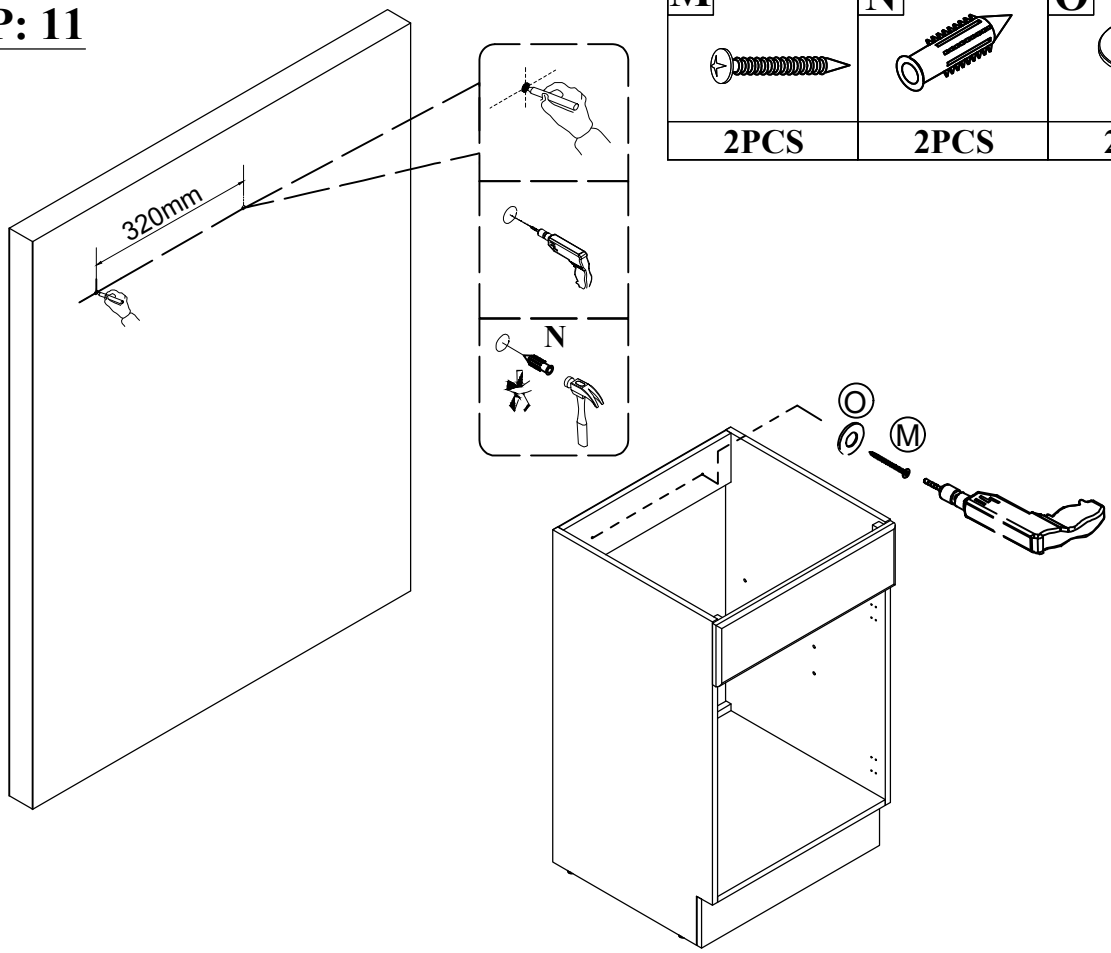

STEP: 12

H
4PCS

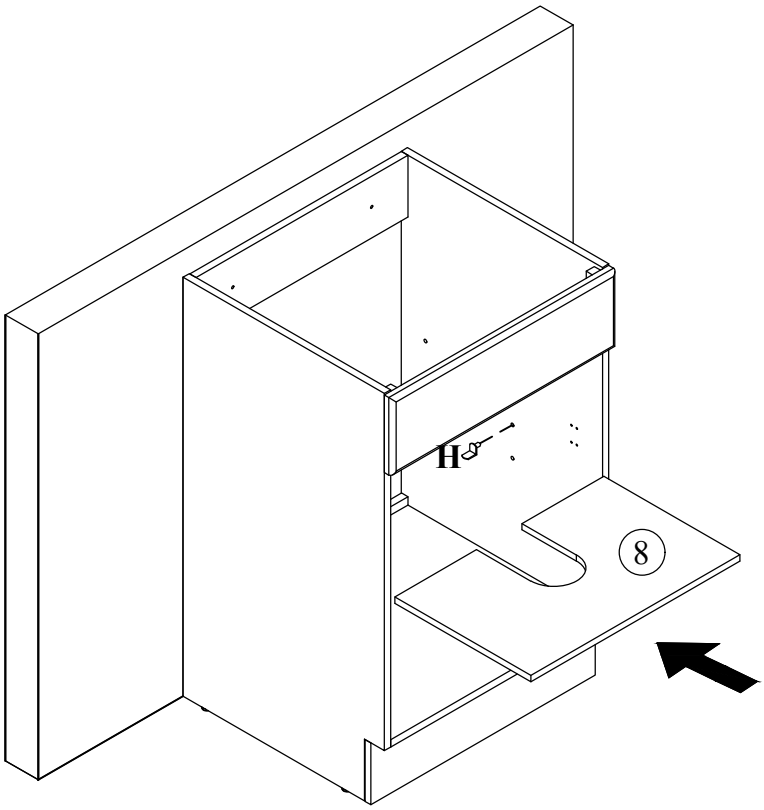

STEP: 13

K	L	J
1PC	1PC	8PCS

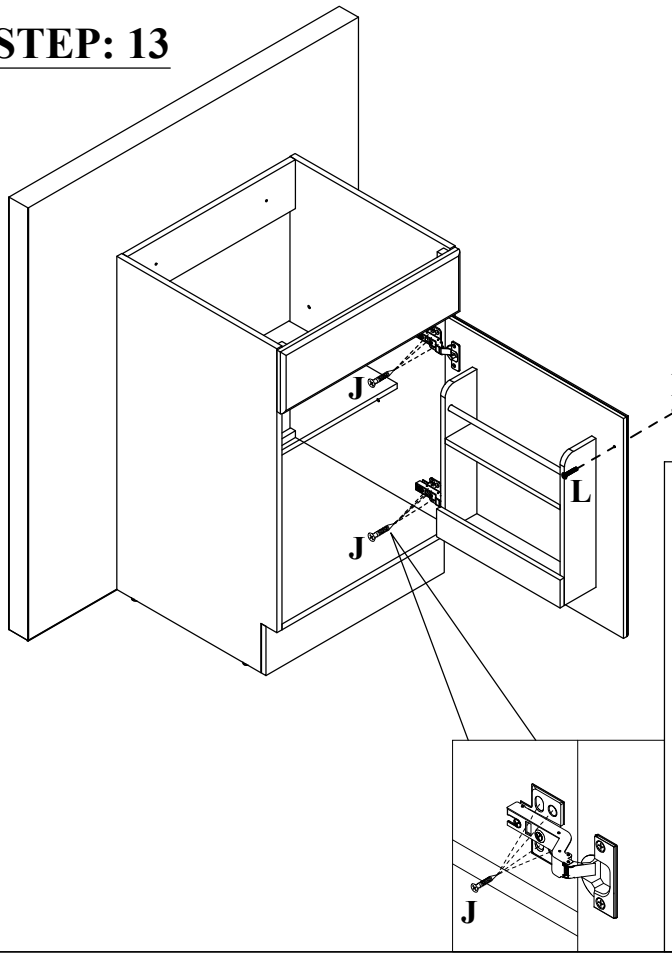

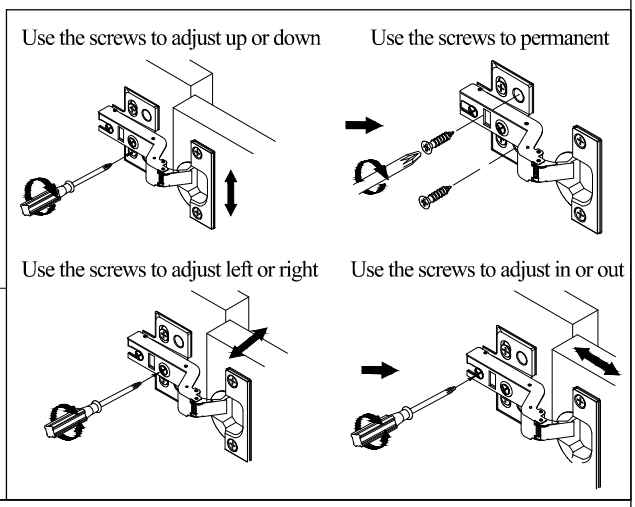

STEP: 14

Install the sink on the cabinet with glue.
Let stand for 24 hours

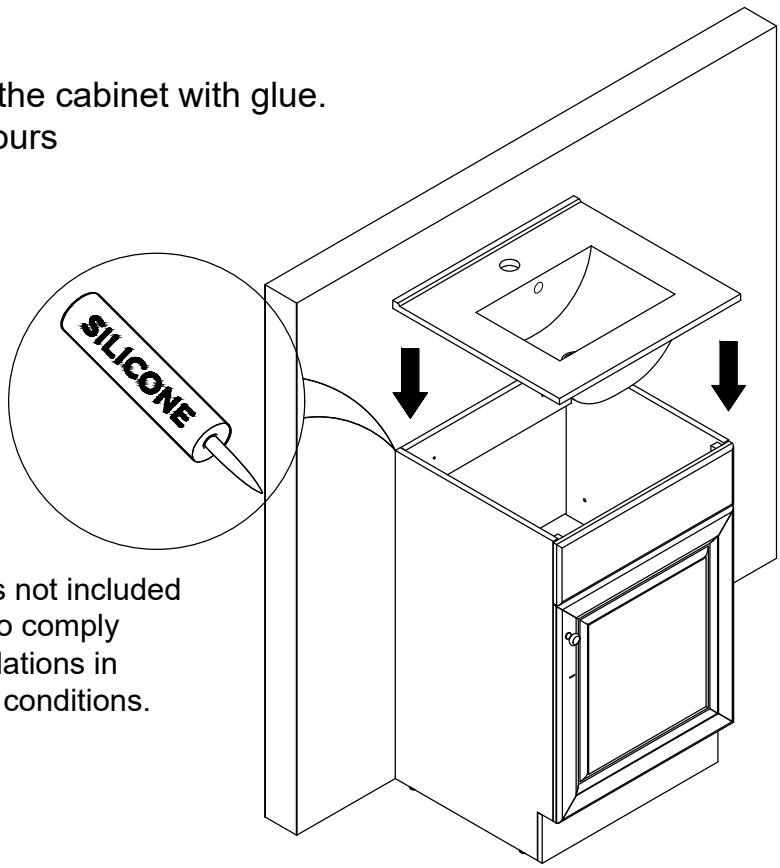

*Silicone glue is not included in the package to comply with safety regulations in certain shipping conditions.

STEP: 15

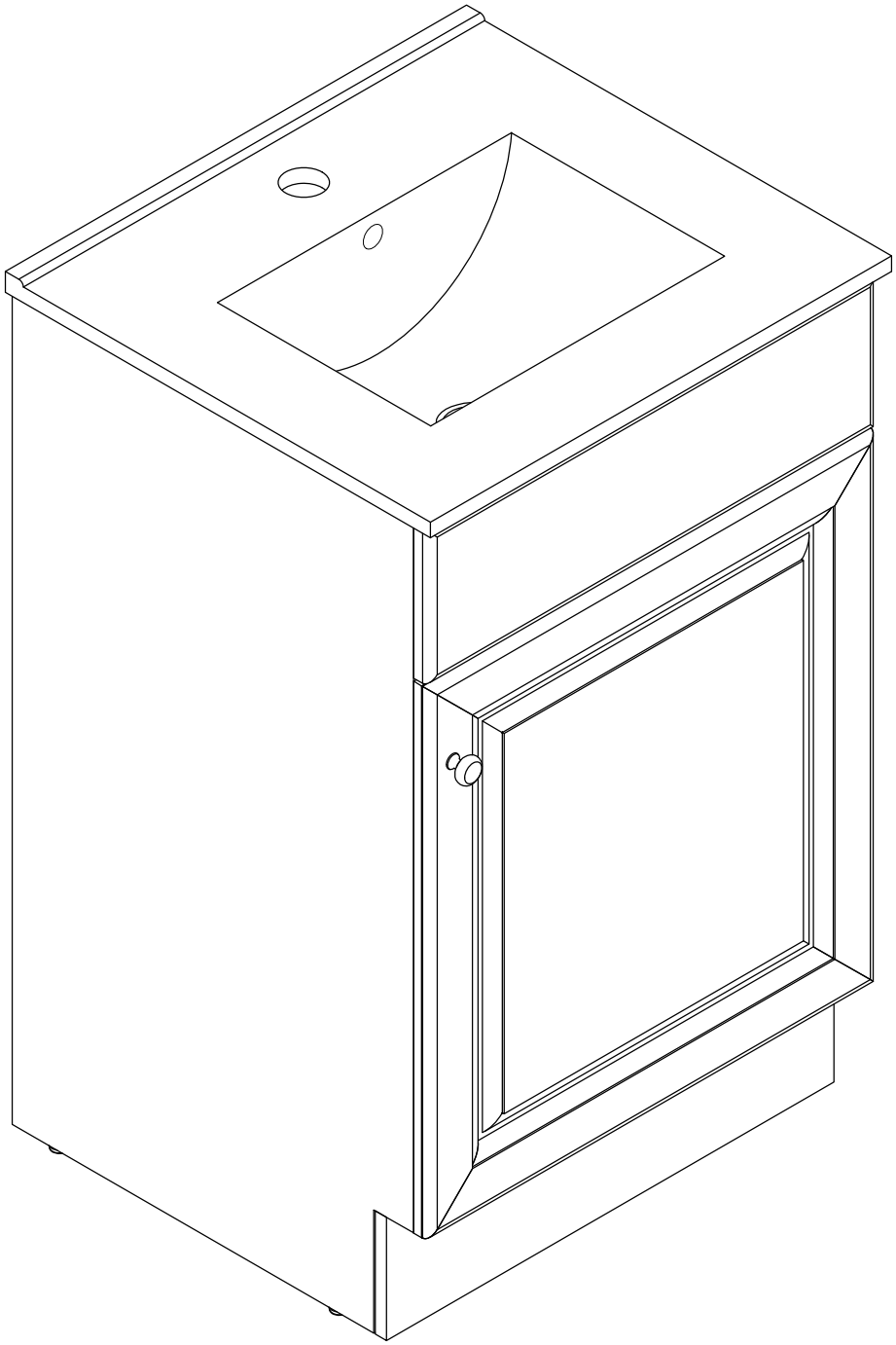

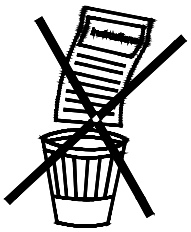

HINGE ADJUSTMENTS

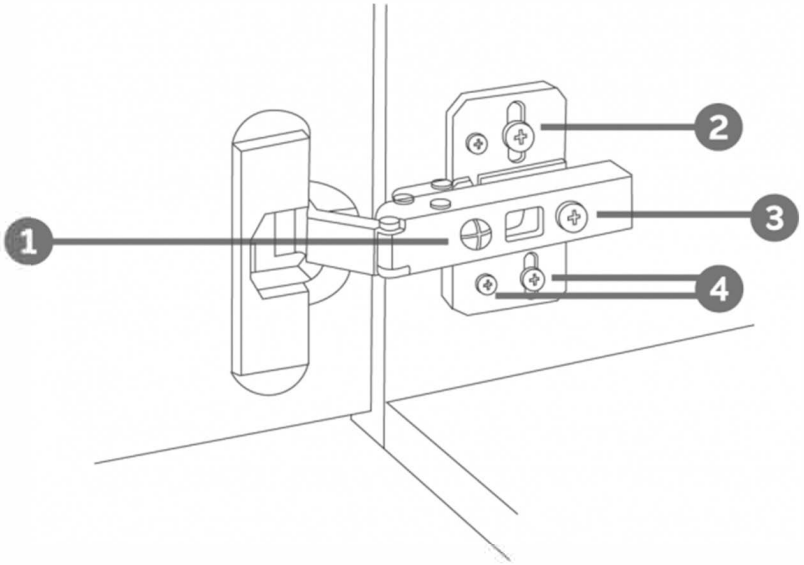

1 Sideways / Tilt adjustment

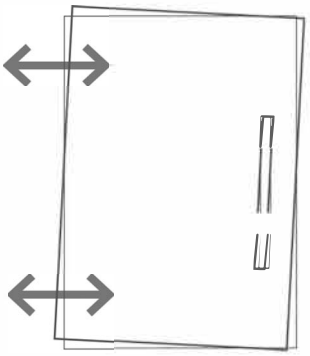

Turn the screw
clockwise to move the door further away from the side of the cabinet
anticlockwise to move the door closer to the side of the cabinet

2 4 Height adjustment

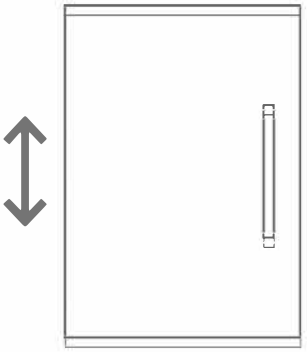

While supporting the weight of the door, turn the screws
clockwise to move the door up
anticlockwise to move the door down

3 Forward and back adjustment

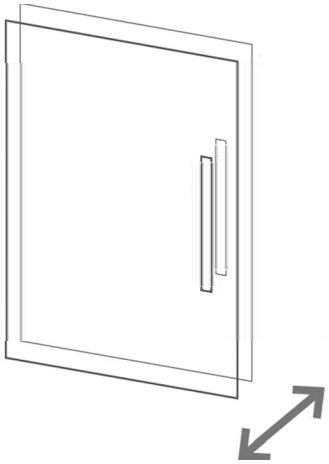

If the gap between the back of the door and the cabinet is too small, and the door may not close fully. Turn the screw
clockwise to decrease the gap between the door and the cabinet
anticlockwise to increase the gap between the door and the cabinet