MASSGAE OFFICE CHAIR
ASSEMBLY INSTRUCTIONS
YS251210 SERIES

ATTENTION

1. This chair comes with 1 box, please check the parts list and hardware list carefully to make sure you've received all parts.
2. If there are any missing parts, please contact us with the missing part and the missing part number, we'll resend them to you ASAP.
3. If there are any damaged parts, please contact us with clear picture or clear video, we'll offer you the best solution after confirming it.

WARRANTY AND RETURN

We offer 6-month warranty and free replacement for all damaged or defective parts you received. Check the condition of your package once upon the delivery. If you have any questions, please contact our customer service immediately.

CONTACT INFORMATION

If you order our product on Amazon/Walmart/Wayfair etc., please log in your Amazon/Walmart/Wayfair account to contact us.
If you order our product on Shopify, please contact us at **serviceteam@yalissey.com** Our service team will reply within 24 hours.

ASSEMBLY INSTRUCTIONS

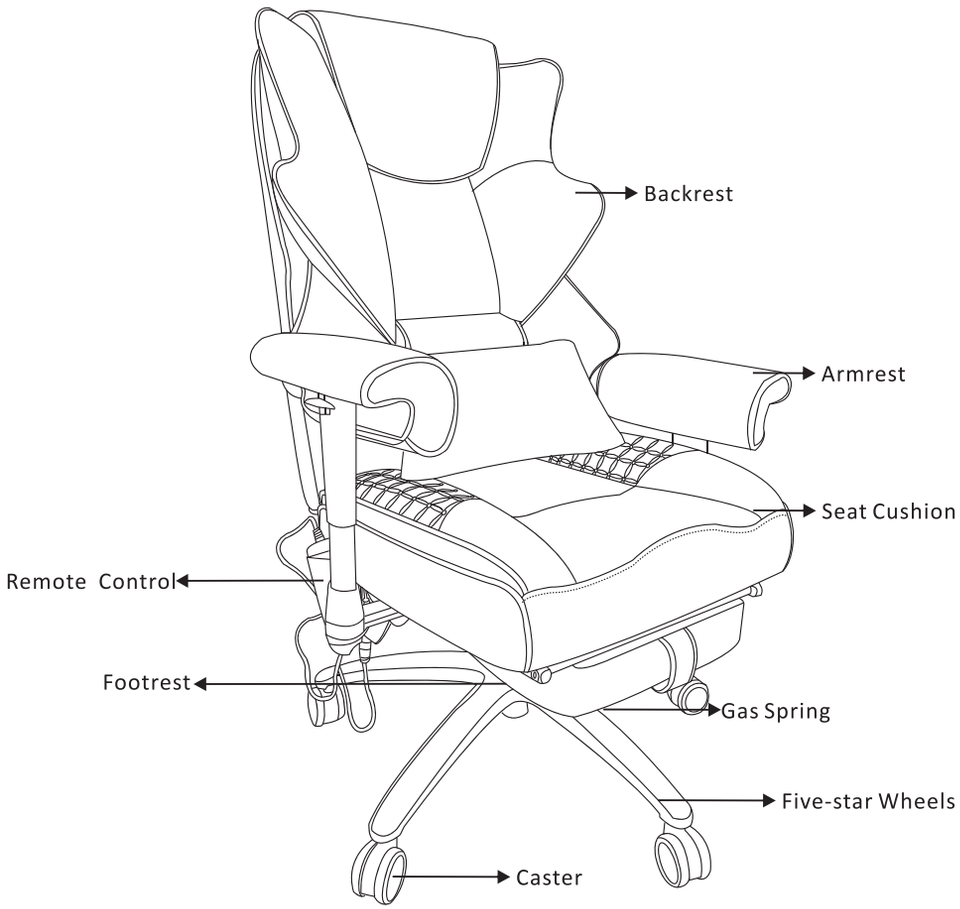

Parts List

I	K	L	M	N
5 pcs	1 pc	5 pcs	1 pc	1 pc
O	**P**	**Q**	**R**	**S**
2 pcs	2 pcs	1 pc	1 pc	1 pc
T	**U**	**V**		
1 pc	1 pc	1 pc		

Hardware List

A	B	C	D	F
M6*14mm	M6*20mm	M6*25mm	M8*25mm	
10pcs	12 pcs	4 pcs	3pcs	1 pc

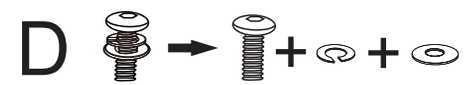

IMPORTANT SAFEGUARDS

1. If one or some screws are fully tightened during the assembly, the other screws may not be aligned with screw holes. 70% tighten before fastening all screws. Allen wrench is recommended instead of an electric drill.
2. If some screws are not aligned with holes during assembly, please loosen all the other screws to 70% and continue the assembly process.
3. If the items is not stable, please loosen all the screws, adjust it on a flat ground and tighten all the screws.
4. Before using the chair be sure that it is completely and properly assembled. Handle with care.
5. Regularly check if all screws are tightly secured.
6. Please do not exceed the maximum load weight of 400lbs.
7. Please do not use the office chair if any components are damaged, worn, broken or cracked.
8. Be careful when using the product to avoid squeezing and shearing, especially between movable parts!
9. Your office chair is equipped with casters for all types of flooring.
10. Please do not let children climb on or play with the product.

STEP 1

	K*1
	A*10
	I*5
	L*5
	F*1

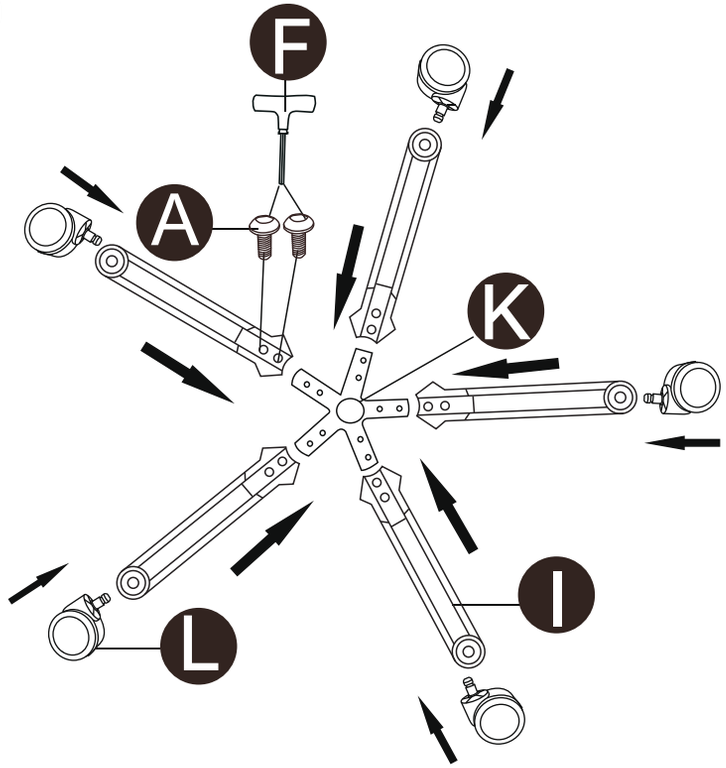

Press to install

First, we need to prepare the connector (K), 5* metal feet (I).5* universal casters (L), 6*14mm screws (Screw A) and a wrench (F). Then, according to the figure, insert the 5* metal feet into the connector, align the screw holes, install the screws and tighten them. Finally, a universal caster is installed on the tail of each metal foot

STEP 2

	M*1

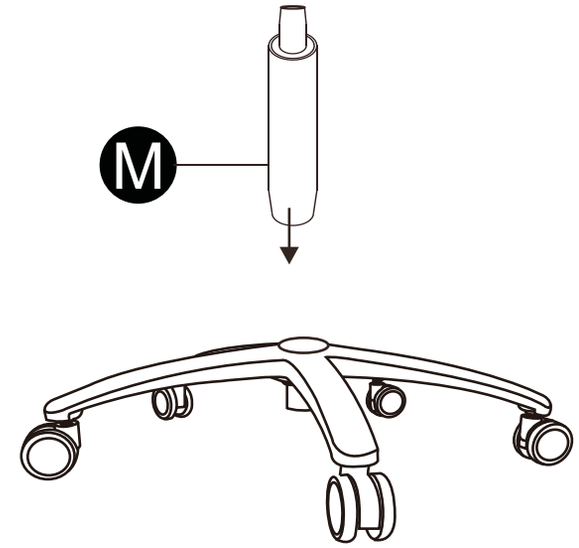

STEP 3

	S*1

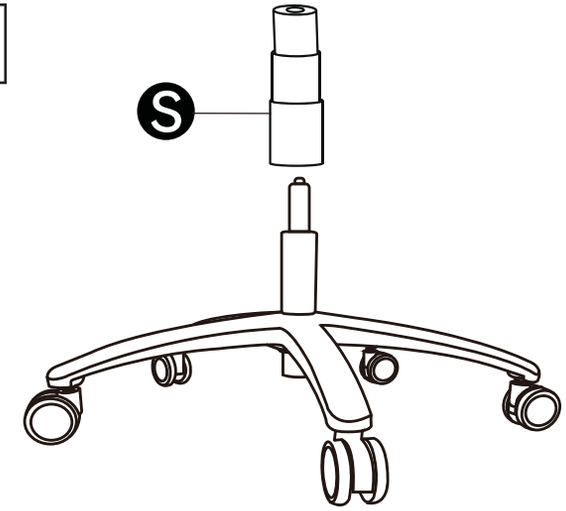

STEP 4

	T*1
	N*1
	C*4
	F*1

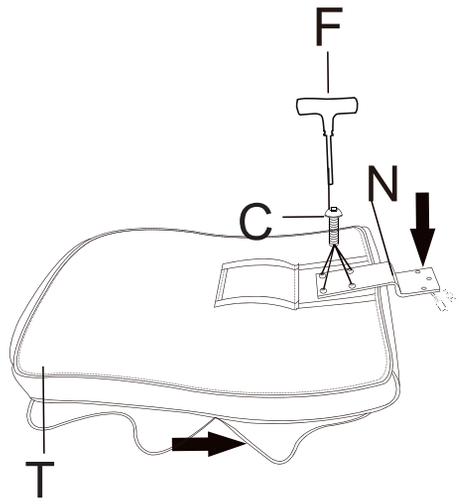

STEP 5

	O*2
	P*2
	B*4
	F*1

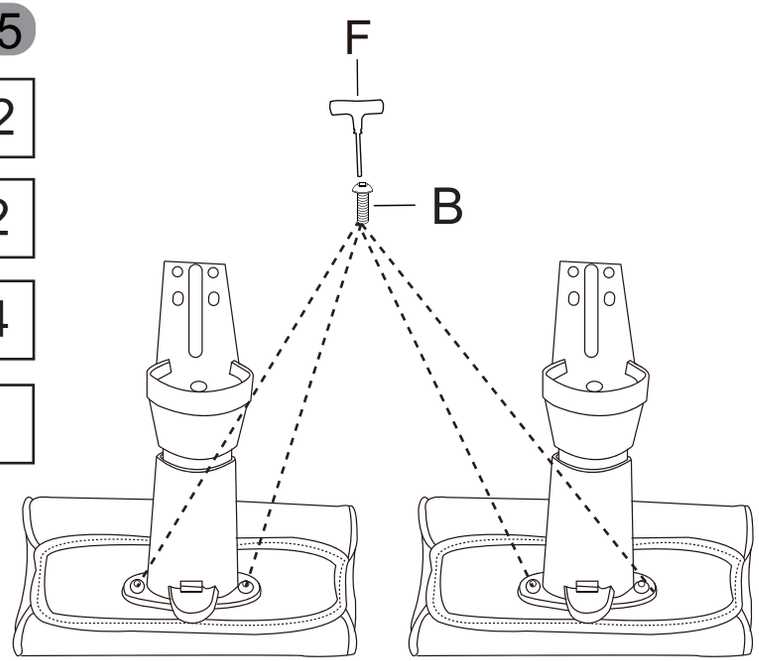

STEP 6

	U*1
	B*8
	F*1

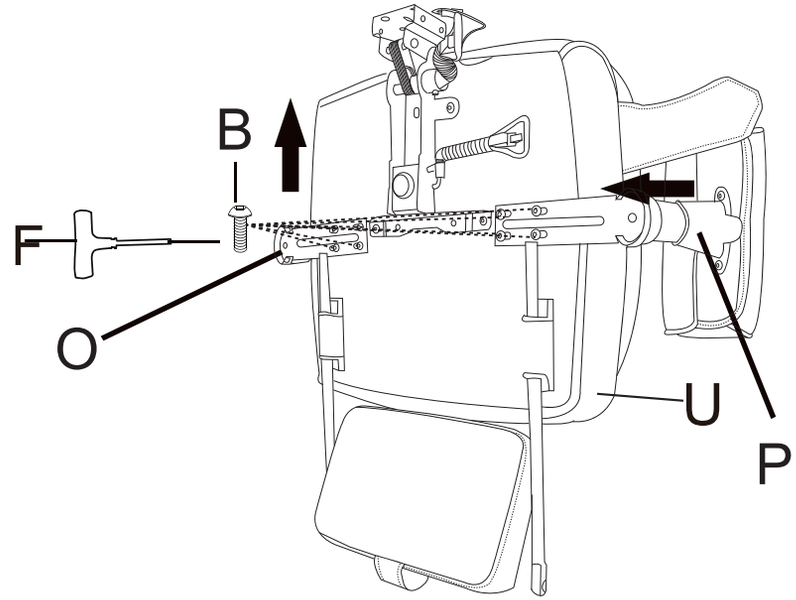

STEP 7

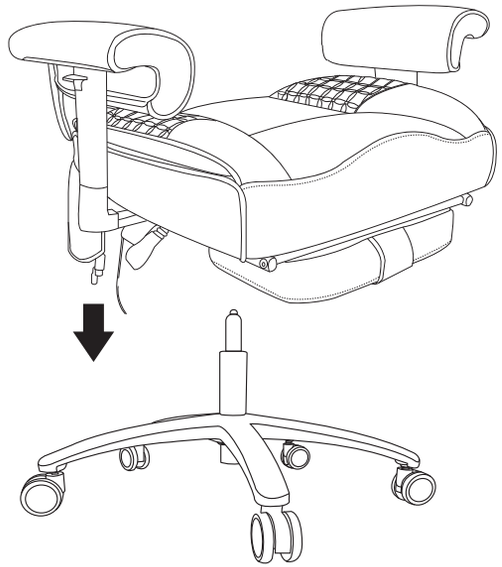

STEP 8

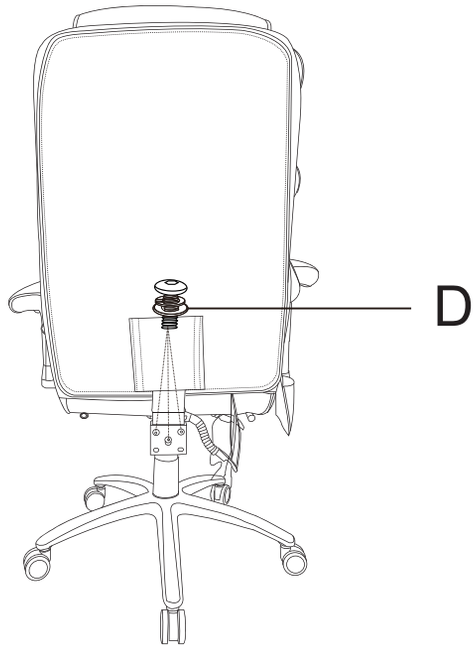

STEP 9

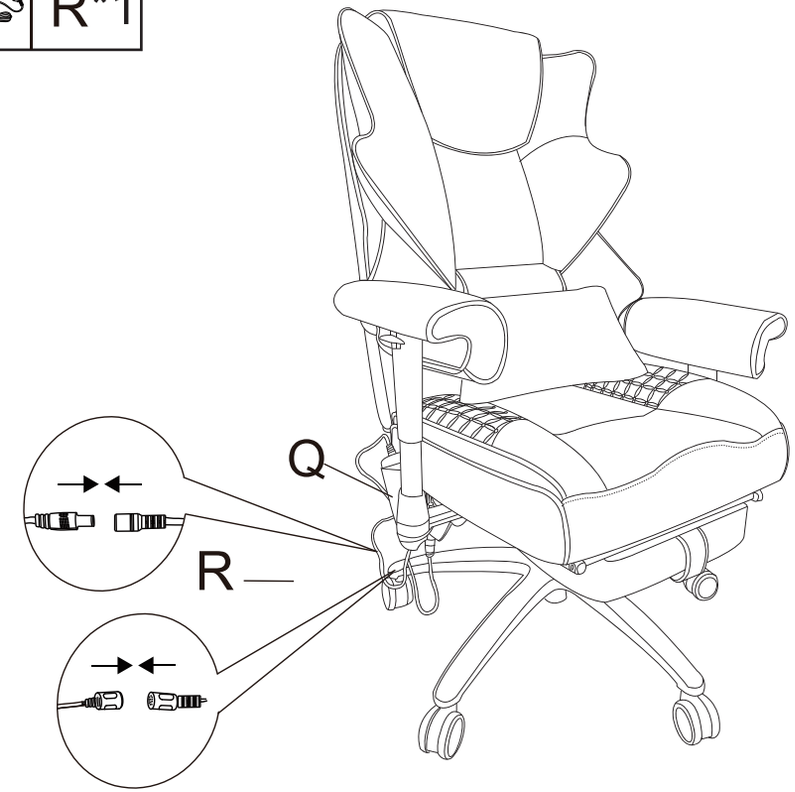

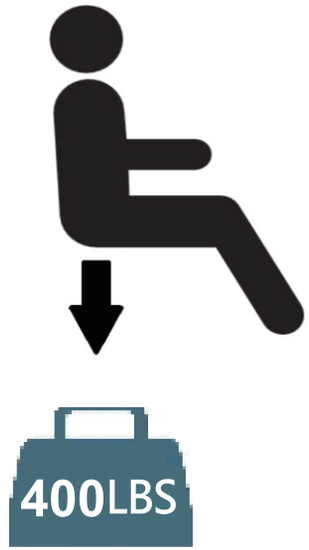

MAX LOAD-BEARING CAPACITY

Pull up to adjust the reclining angle of the office chair;
Press to lock the angle.

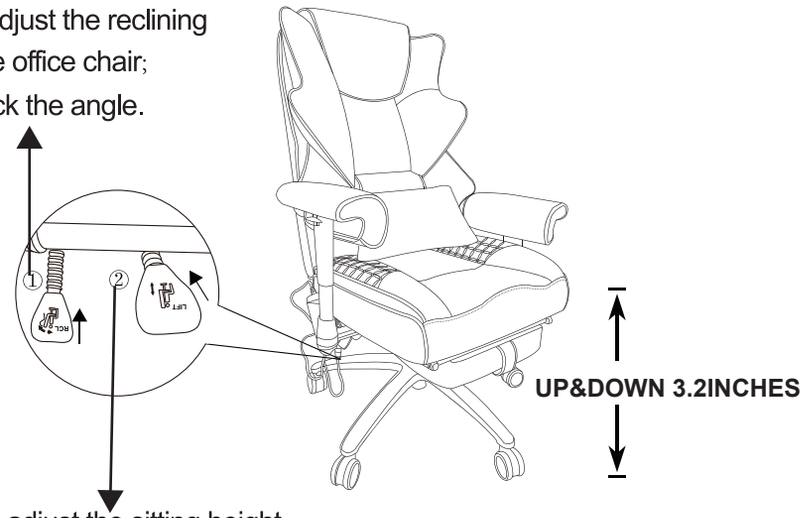

Pull up to adjust the sitting height.

You can raise or lower the seat by 3.2 inches, ensuring a customizable and comfortable sitting position.

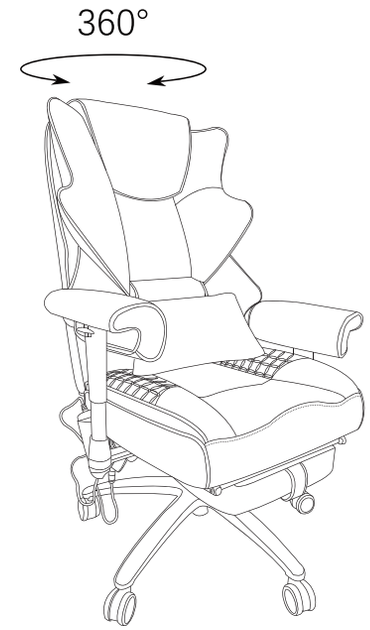

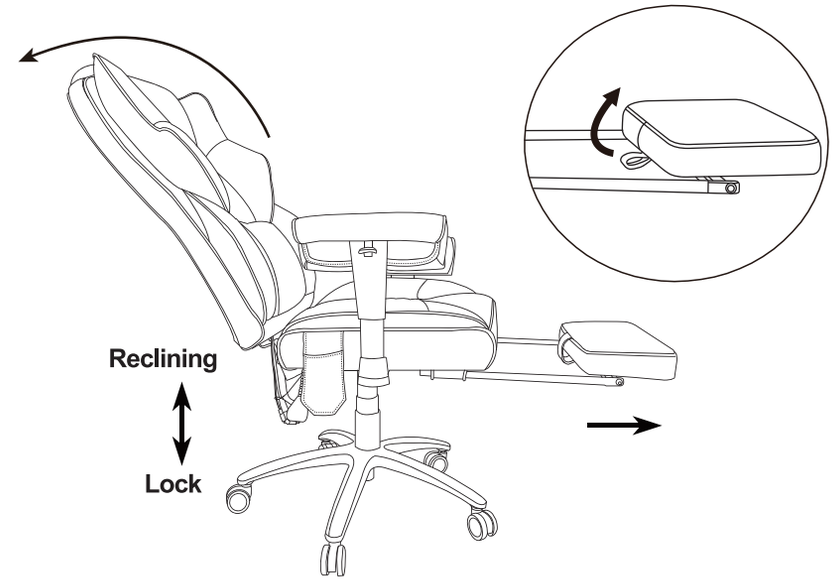

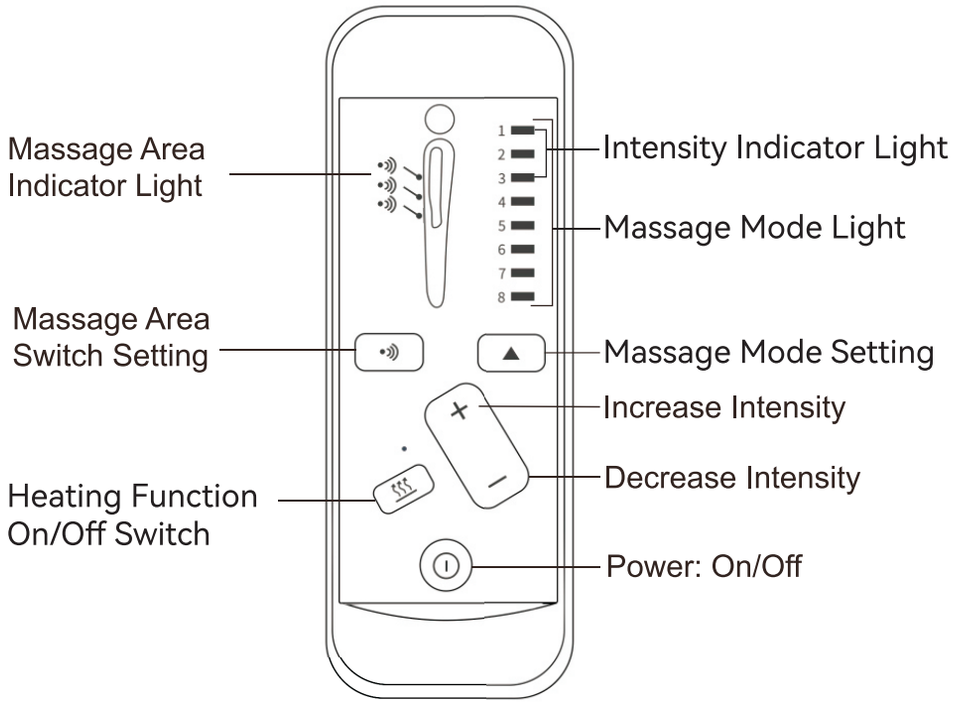

Function Explanation of Remote Control Buttons

: Power Button: On/Off

▲ : Press the triangular button to switch and select from eight massage modes.

: Press this button to turn on/off the heating function.

+ : Press the plus (+) button to increase the massage intensity.

— : Press the minus (-) button to decrease the massage intensity.

: Press this button to switch and select the massage area.

Operating Steps of Remote Control

Step1: Plug in the power plug, press the button to turn on the remote control.

Step2: Press the button to select the massage area, there are three different massage areas, which you can customize according to your preference.

Step3: Press the button to turn on/off the heating function. Adhering to the concept of safety first, the heating temperature of this office chair is up to 113 degrees Fahrenheit, it is recommended that you take off the thick coat when using indoors in winter.

Step4: Press the triangle button ▲ to select the massage mode. The numbers 1 to 8 represent eight different massage modes, which you can customize according to your preference.

Step5: Once you've set the massage mode, then press the plus button + or minus button — to adjust the massage intensity. There are 3 massage intensities.

When indicator light 1 is on, it indicates the weakest massage intensity, and when indicator lights 1 to 3 are all on, it indicates the strongest massage intensity.