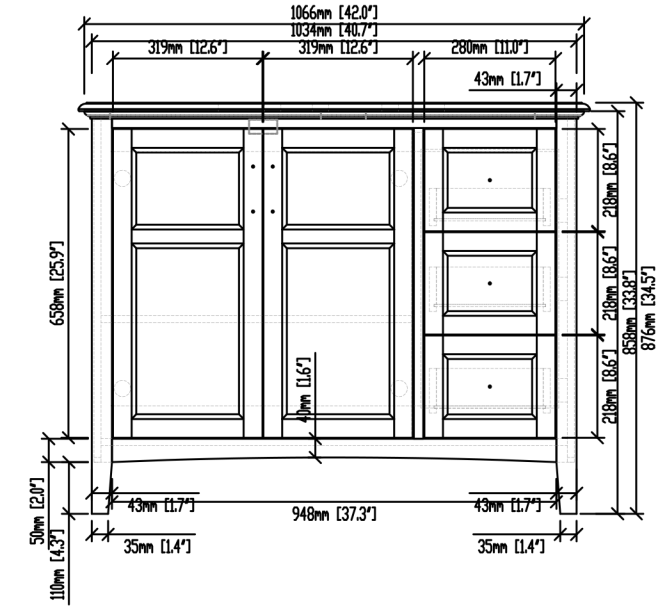
1066mm [42.0"]
1034mm [40.7"]
319mm [12.6"]
319mm [12.6"]
280mm [11.0"]
43mm [1.7"]
658mm [25.9"]
218mm [8.6"]
218mm [8.6"]
218mm [8.6"]
858mm [33.8"]
876mm [34.5"]
40mm [1.6"]
50mm [2.0"]
110mm [4.3"]
43mm [1.7"]
948mm [37.3"]
43mm [1.7"]
35mm [1.4"]
35mm [1.4"]

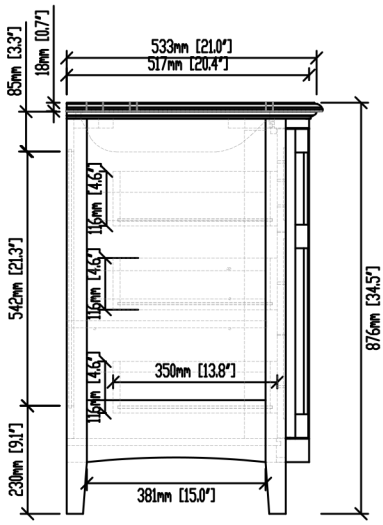
85mm [3.3"]
18mm [0.7"]
533mm [21.0"]
517mm [20.4"]
542mm [21.3"]
116mm [4.6"]
116mm [4.6"]
116mm [4.6"]
350mm [13.8"]
876mm [34.5"]
230mm [9.1"]
381mm [15.0"]

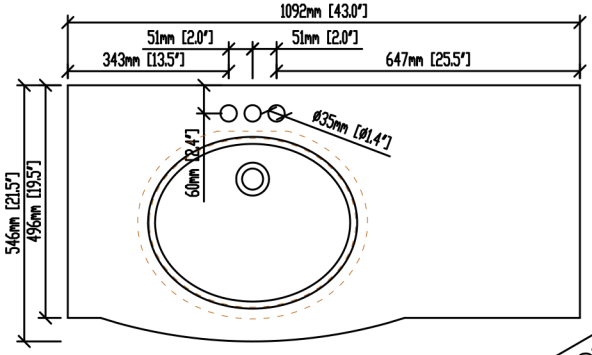
1092mm [43.0"]
51mm [2.0"]
51mm [2.0"]
343mm [13.5"]
647mm [25.5"]
Ø35mm [Ø1.4"]
60mm [2.4"]
546mm [21.5"]
496mm [19.5"]

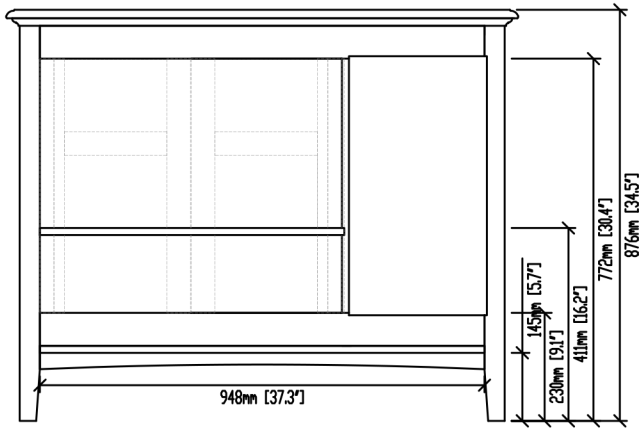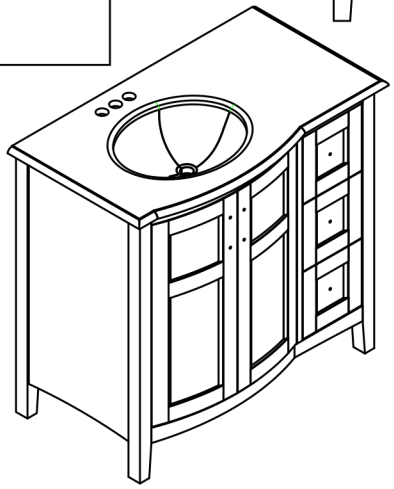
876mm [34.5"]
772mm [30.4"]
145mm [5.7"]
411mm [16.2"]
230mm [9.1"]
948mm [37.3"]