MCGR#832PH
Power Sofa P2

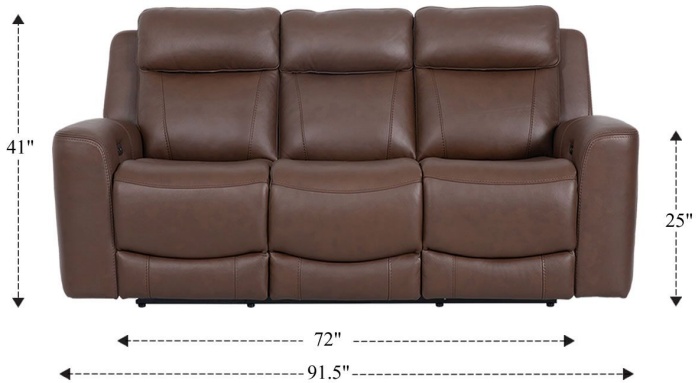

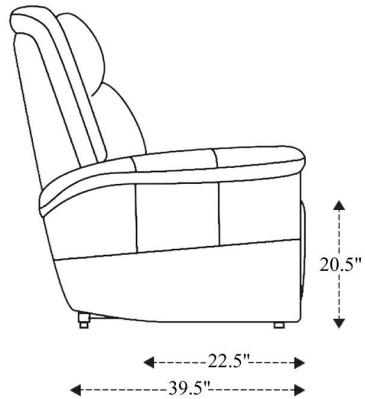

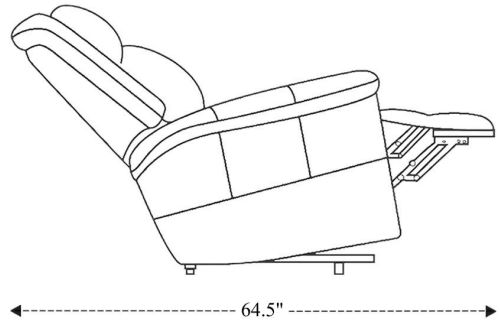

Overall Dimensions	91.5" x 39.5" x 41"
Overall Width	91.5"
Overall Depth	39.5"
Overall Height	41"
Overall Weight	262.5 lbs.
Fully Reclined	64.5"
Distance from Wall	18.5"
Back of Seat to end of Chaise	41.5"
Leg Height (Distance from Foot Rest to Floor in Full Recline)	22"
Head Height (Distance from Headrest to Floor in Full Recline)	31.5"

Seat Width	24"
Seat Depth	22.5"
Seat Height	20.5"
Arm Width	9.5"
Arm Depth	23"
Arm Height	25"
Back Width	25"
Back Height	24"
Headrest Extended from Back	7"

MCGR#812PH
Power Recliner P2

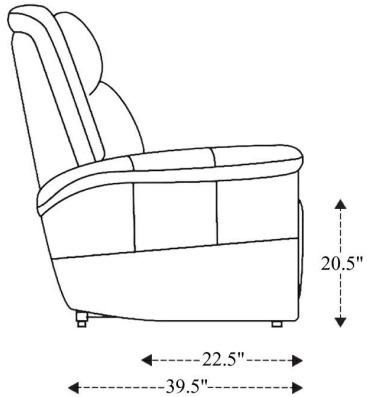

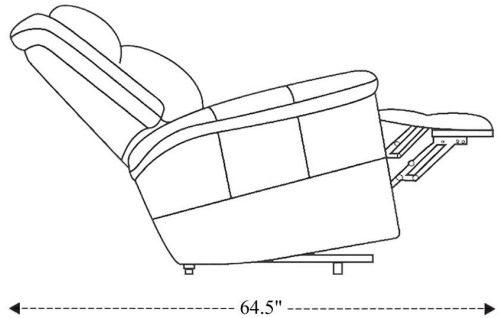

Overall Dimensions	44" x 39.5" x 41"
Overall Width	44"
Overall Depth	39.5"
Overall Height	41"
Overall Weight	114.75 lbs.
Fully Reclined	64.5"
Distance from Wall	18.5"
Back of Seat to end of Chaise	41.5"
Leg Height (Distance from Foot Rest to Floor in Full Recline)	22"
Head Height (Distance from Headrest to Floor in Full Recline)	31.5"

Seat Width	24"
Seat Depth	22.5"
Seat Height	20.5"
Arm Width	9.5"
Arm Depth	23"
Arm Height	25"
Back Width	25"
Back Height	24"
Headrest Extended from Back	7"