CORONA BED SIZE QUEEN

ASSEMBLY INSTRUCTIONS

SKU 4003LT Distressed Waxed Pine

800 lb
362 Kg

MAX BED WEIGHT

Seconique Furniture

seconique-us.com

IMPORTANT
PLEASE READ BEFORE YOU CONTINUE FURTHER
FOR DOMESTIC USE ONLY
CARE AND MAINTENANCE

- After unpacking this product, please keep the original packaging in case it needs to be returned for any reason.
- Please ensure all fittings and parts are present before commencing with assembly.
- We recommend that you lay a blanket or sheet on the floor to avoid damage to both your floor and the product.
- We strongly recommend that you keep children away from your work area.
- Assemble this product as close to its final position as possible.
- Never drag or push products as this could case damage to the joints making it inferior.
- Do not drag or push items across your furniture as this may cause the surface to scratch.
- Do not place this product next to radiator or in direct sunlight.
- Wood is a natural product and may expand if subjected to damp and may shrink or crack if subjected to heat. Therefore, it is recommended that room temperature is maintained, with no sudden temperature fluctuations.
- Make sure any spillage is wiped off immediately.
- Do not place hot or chilled items directly on to the surface, use a place mat or marking will occur.
- For general cleaning, use a soft cotton or micro fibre cloth and do not use detergents of any kind.
- Do not place on a wet or damp floor as staining may occur to your floor.
- From time to time, it may be necessary to tighten fittings; regular inspections should be carried out.

---

how to contact us:
More details how to assemble your product at: seconique-us.com then follows:

info@seconiqueus.com

seconique-us.com

SKU 4003LT Distressed Waxed Pine

---

seconique-us.com

seconique-us.com

YouTube

seconique US

@seconiqueus

BEFORE START **READ** QR CODE TO FIND MORE INFORNATIONS
HOW TO ASSEMBLY THIS PRODUCT:

SKU 4003LT Distressed Waxed Pine

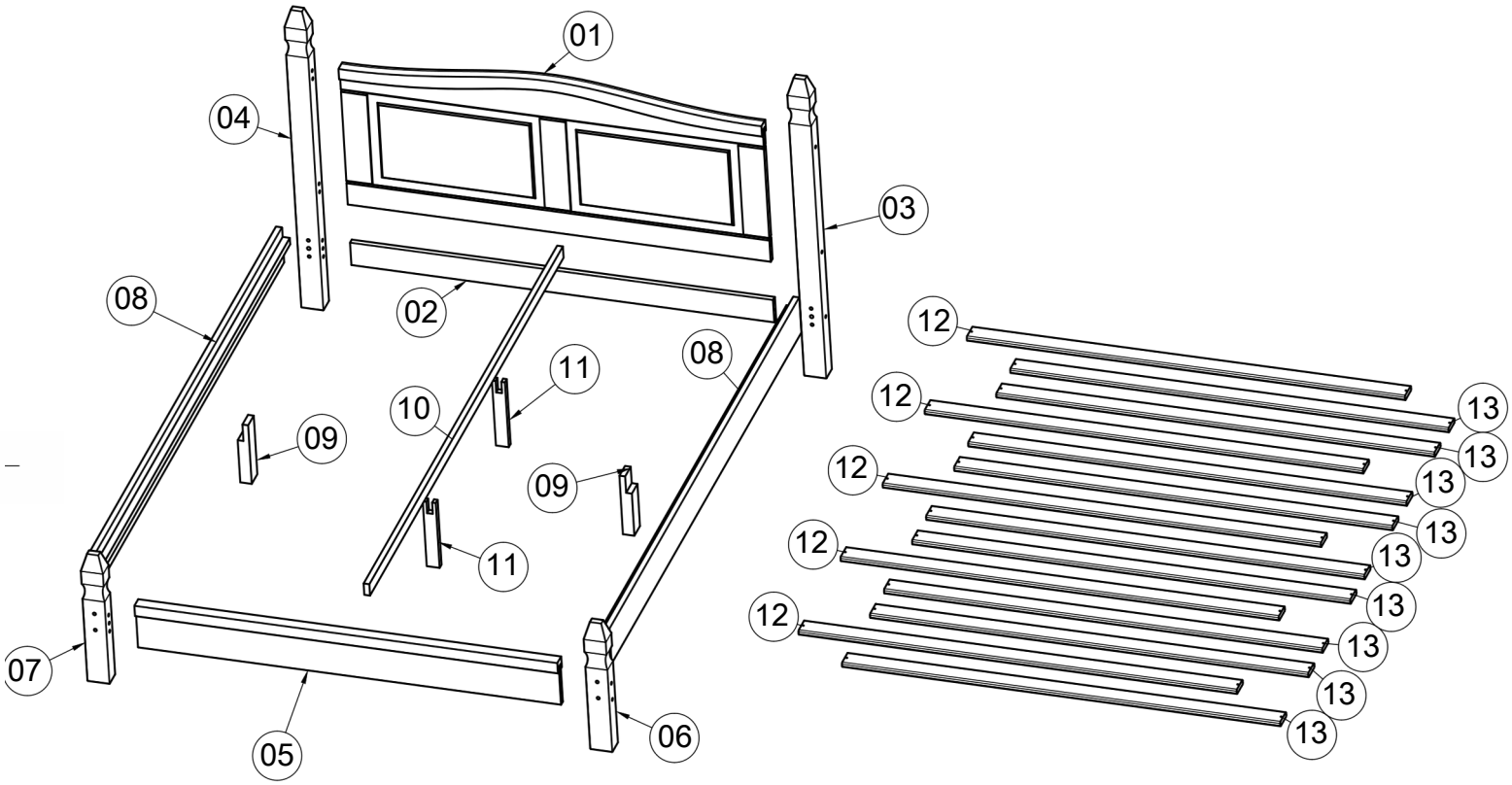

Please Note: The parts below have been stamped with the part number to help identify them during assembly

Part Number	Part Description	Quantity	Carton
01	Headboard Panel	1	2/2
02	Headboard Crossbeam	1	2/2
03	Right Headboard Post	1	1/2
04	Left Headboard Post	1	1/2
05	Footboard Panel	1	2/2
06	Right Footboard Post	1	1/2
07	Left Footboard Post	1	1/2
08	Siderails	2	1/2
09	Siderail Support	2	1/2
10	Centre Support Rail	1	1/2
11	Centre Support Leg	2	1/2
12	Slats (3 Holes)	5	2/2
13	Slats (2 Holes)	9	2/2

BEFORE START **READ** QR CODE TO FIND MORE INFORNATIONS
HOW TO ASSEMBLY THIS PRODUCT:

SKU 4003LT Distressed Waxed Pine

A	+1 10 x 50 mm	**14**	**H**	GLUE	**01**
B	1/4" x 110 mm	**04**	**I**	+1	**04**
C	+1	**04**	**J**	+1 3.5 x 30 mm	**33**
D	7 x 120 mm	**10**	**K**	+1 4.0 x 35 mm	**08**
E	7 x 100 mm	**04**	**L**	+1 4.0 X 16 mm	**10**
F		**01**	**M**		**02**
G	(SPACER) (WOODEN)	**02**	**N**	7 x 80mm	**02**

* Use of power tools to assemble this product will invalidate any claim and damage this product making it unsafe !!!
* Please assemble on a clean soft surface to avoid damage.

* Please check contents and read the instructions before commencing assembly.
* Assemble this product following the enclosed instructions carefully.
* Please take care to avoid damaging panels during assembly.

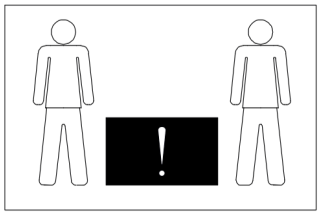

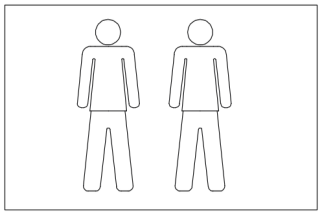

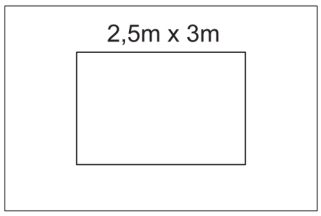

TOOLS REQUIRED

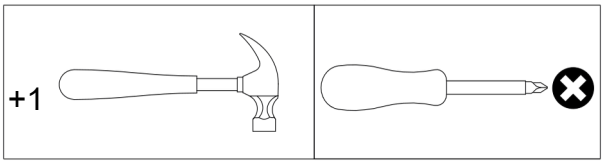

STEP 1

TOOLS REQUIRED:

PARTS REQUIRED:

01	Headboard Panel	**x1**	**05**	Footboard Panel	**x1**
02	Headboard Crossbeam	**x1**			

HARDWARE REQUIRED:

A	**10 X 50 mm**	**x10**
H	GLUE	**x1**

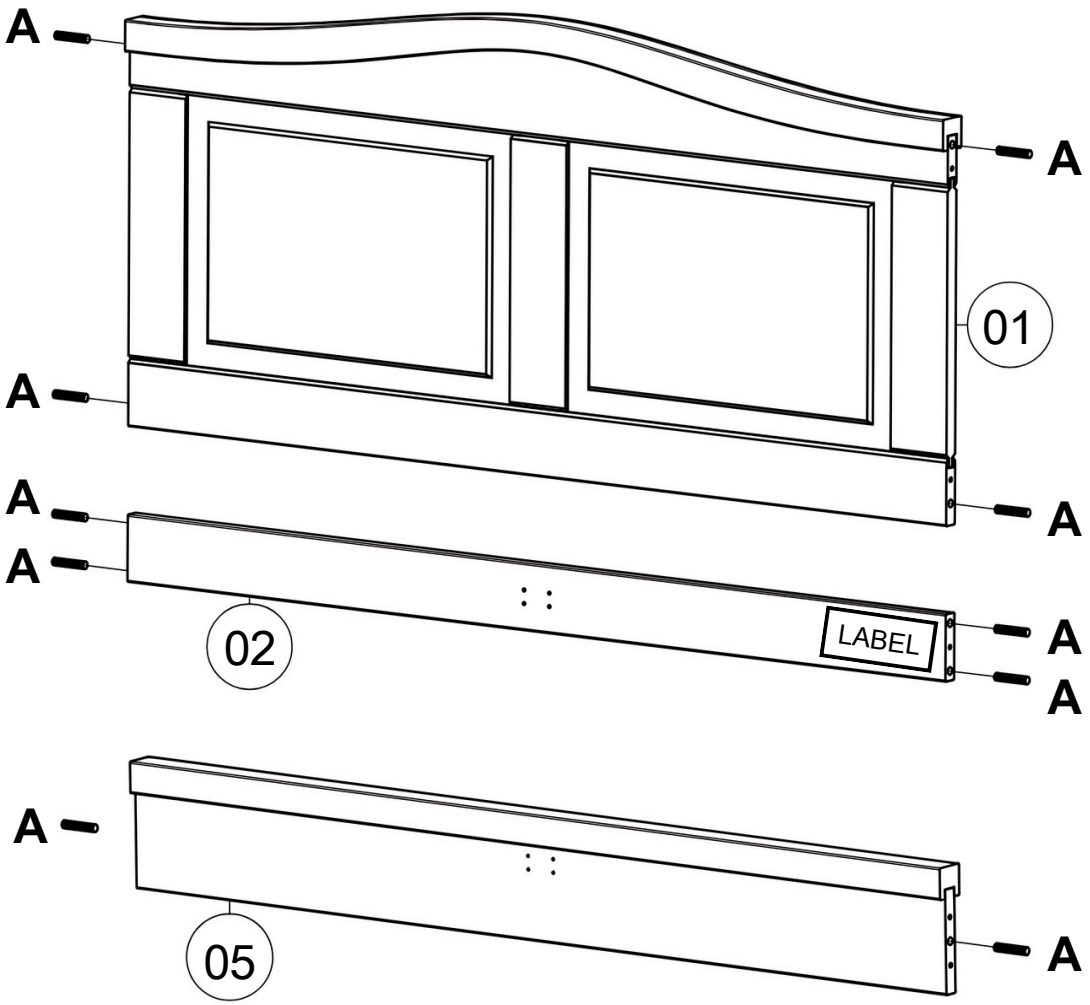

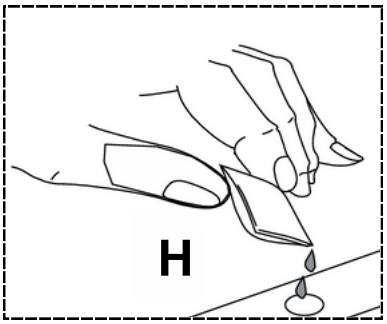

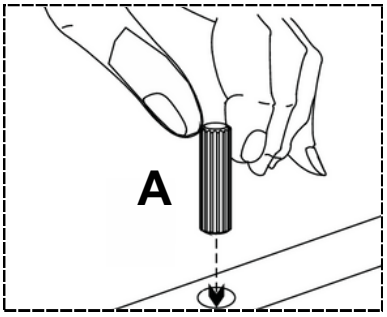

Glue must be added to the dowel holes on parts 01, 02 and 05.

STEP 2

TOOLS REQUIRED:

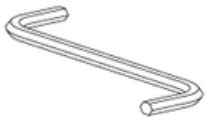

PARTS REQUIRED:

01	Headboard Panel	**x1**	**03**	Right Headboard Post	**x1**
02	Headboard Crossbeam	**x1**	**04**	Left Headboard Post	**x1**

HARDWARE REQUIRED:

D	**7 X 120 mm**	**x6**

D
04
D
D
01
D
03
D
D
02
LABEL
Please note the pre-marked holes and the label position.
D
F

STEP 3

TOOLS REQUIRED:

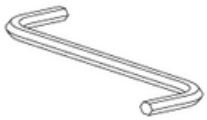

PARTS REQUIRED:

05	Footboard Panel	**x1**	**07**	Left Footboard Post	**x1**
06	Right Footboard Post	**x1**			

HARDWARE REQUIRED:

D	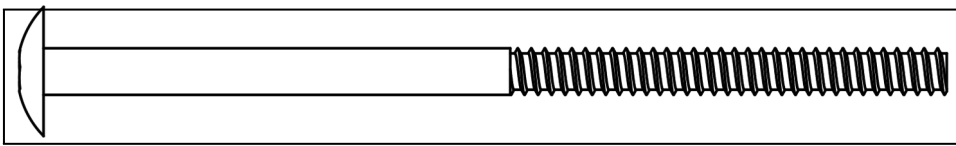 **7 X 120 mm**	**x4**

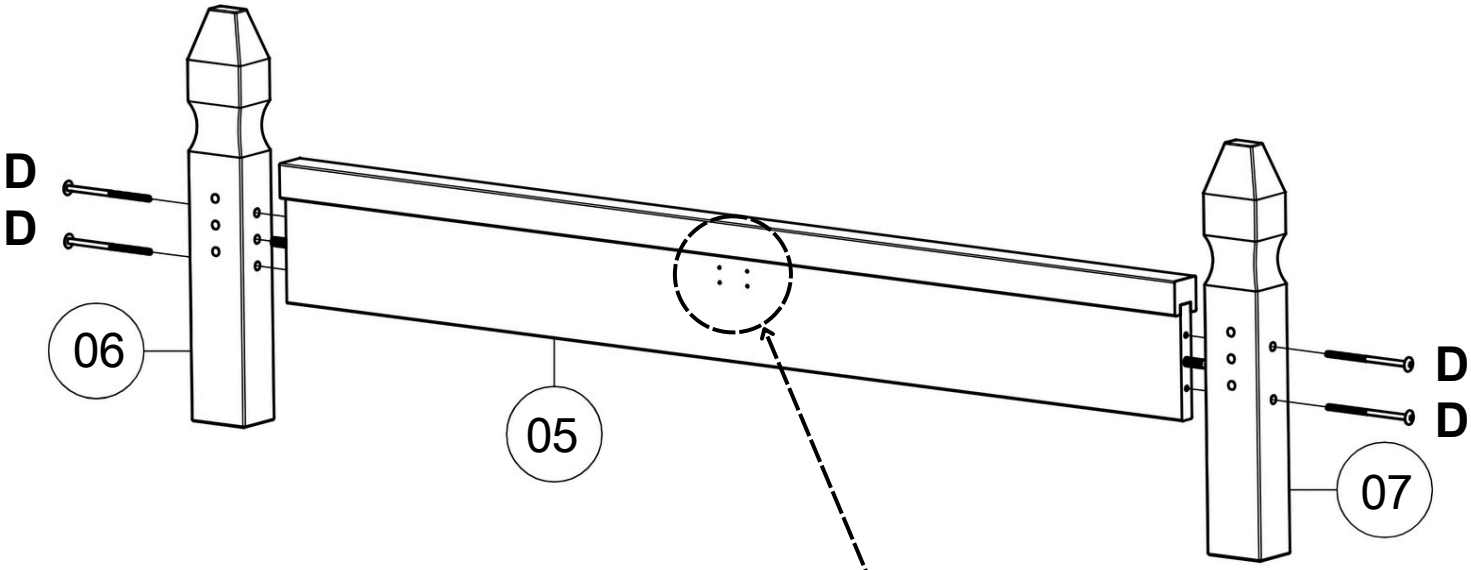

Please note the pre-marked holes!

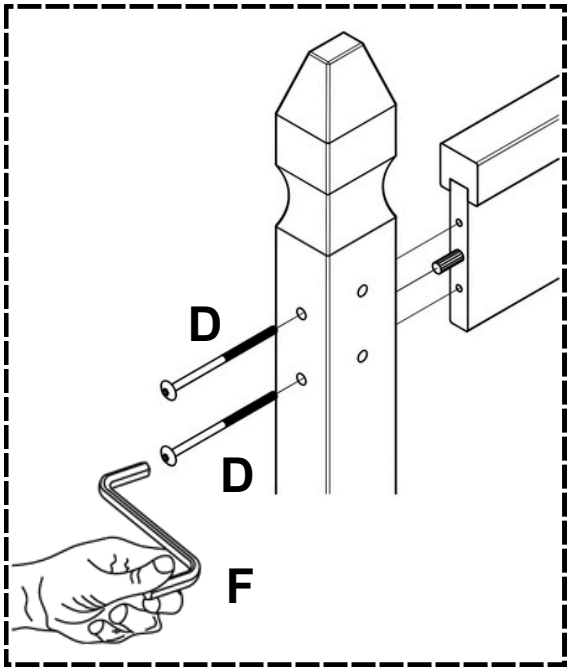

STEP 4

TOOLS REQUIRED:

PARTS REQUIRED:

08	Siderail	**x2**

HARDWARE REQUIRED:

A	**10 X 50 mm**	**x4**
H	**GLUE**	**x1**

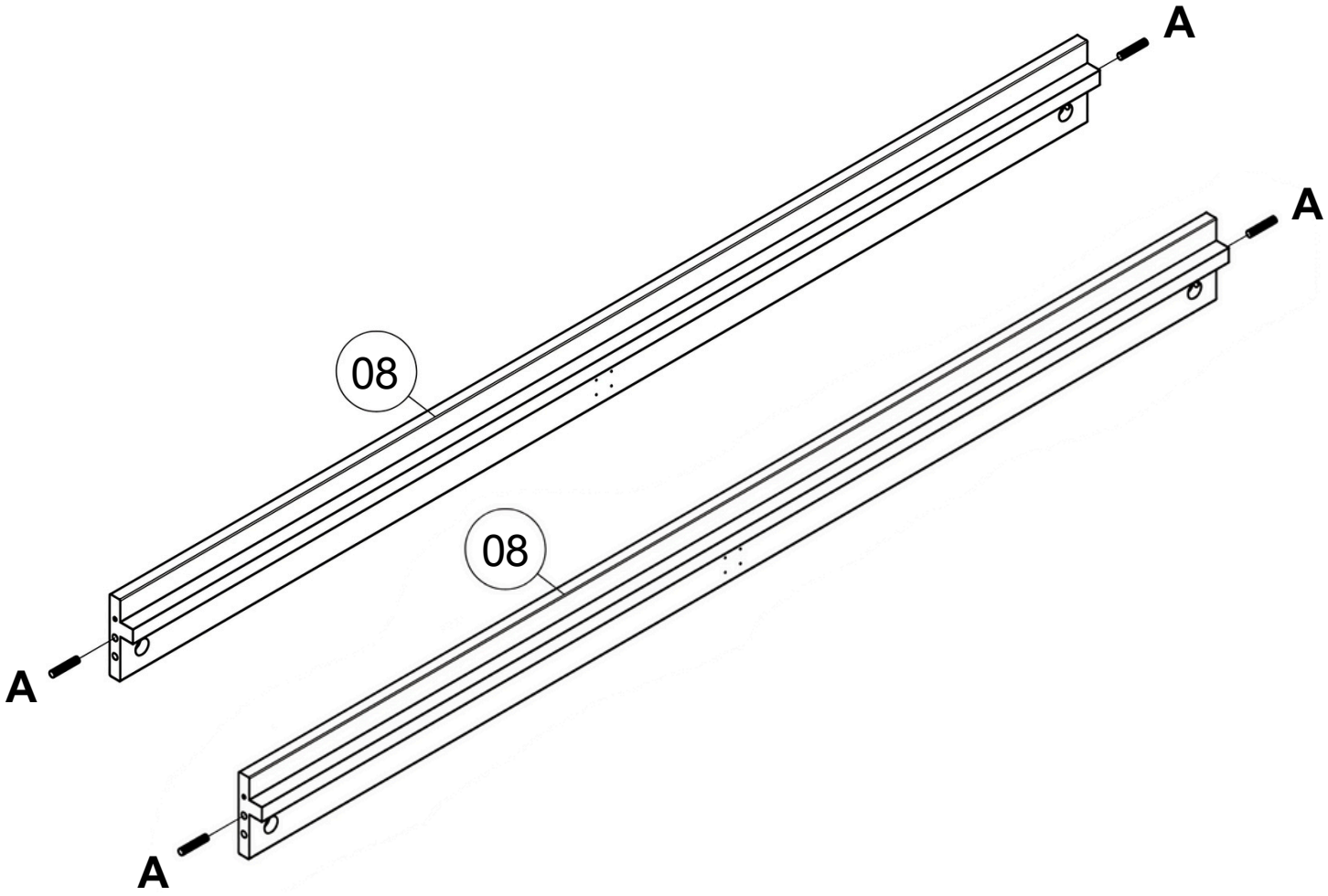

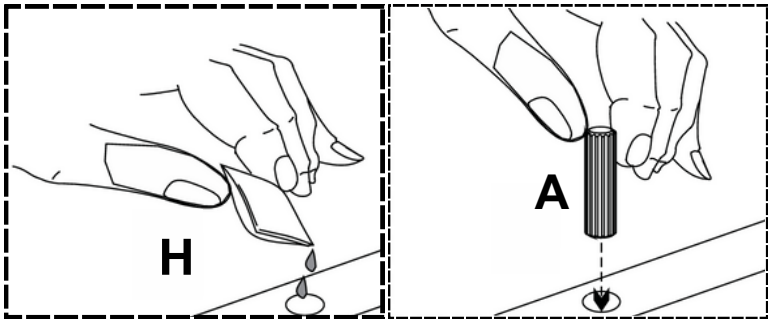

Glue must be added to the dowel holes on parts 08.

STEP 5

TOOLS REQUIRED:

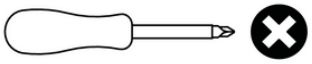

PARTS REQUIRED:

08	Siderail	**x2**	**09**	Siderail Support	**x2**

HARDWARE REQUIRED:

K	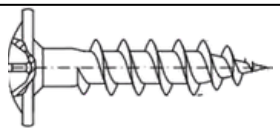 **4.0 x 35mm**	**x8**

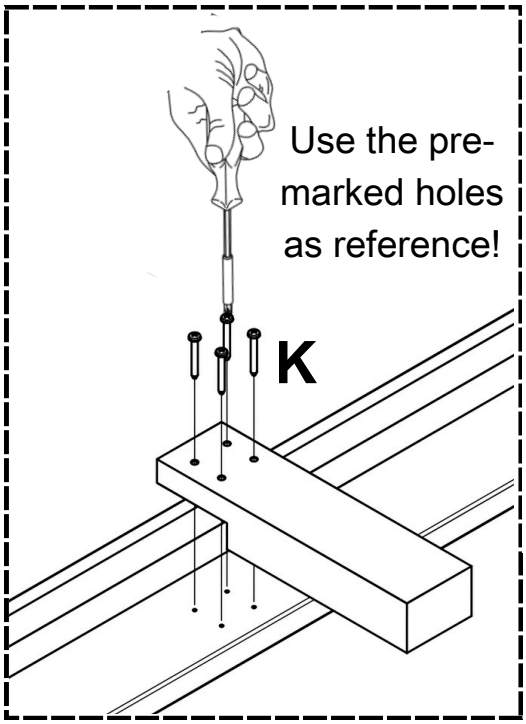

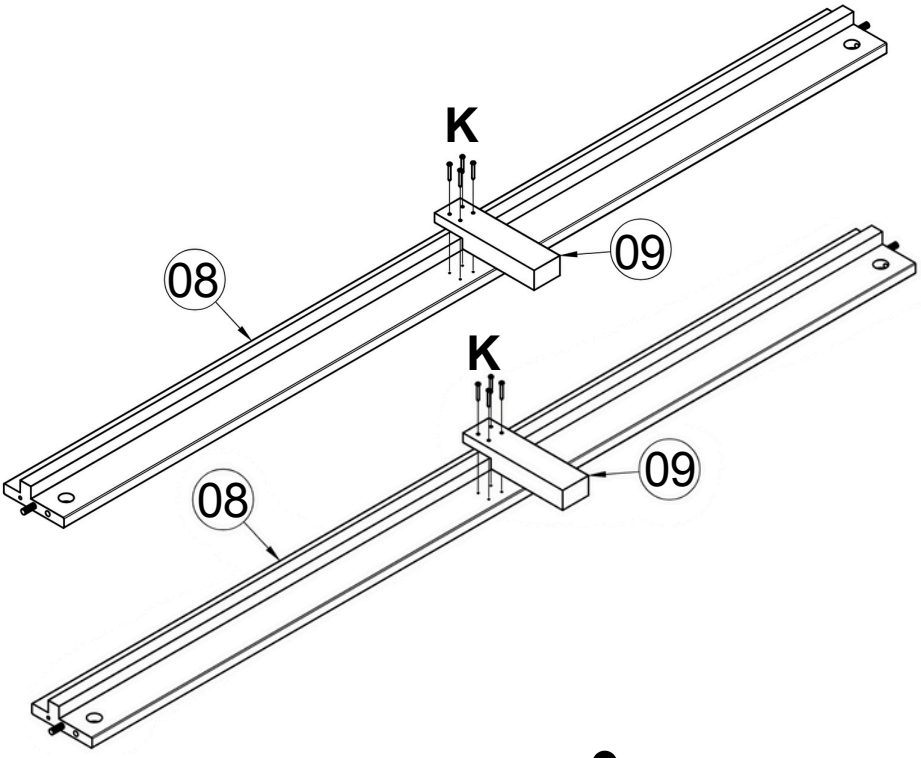

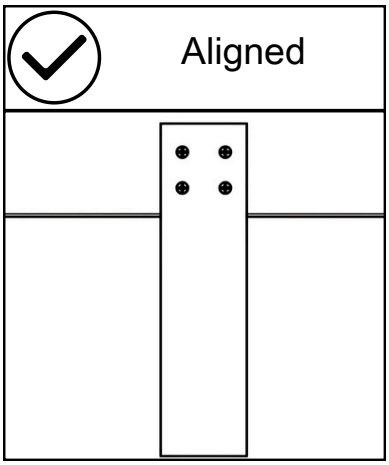

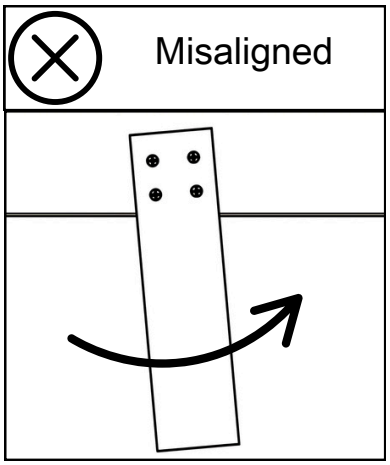

The Siderail Support (9) must be mounted perpendicular to the siderail (8). Make sure the part is not misaligned. Mount the Siderail Support (9) with its cut-out face flush against the underside of the siderail (8).

STEP 6

TOOLS REQUIRED:

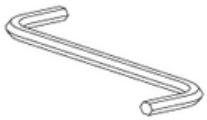

PARTS REQUIRED:

HARDWARE REQUIRED:

B	1/4 X 110 mm	x4
C		x4
E	7 X 100 mm	x4

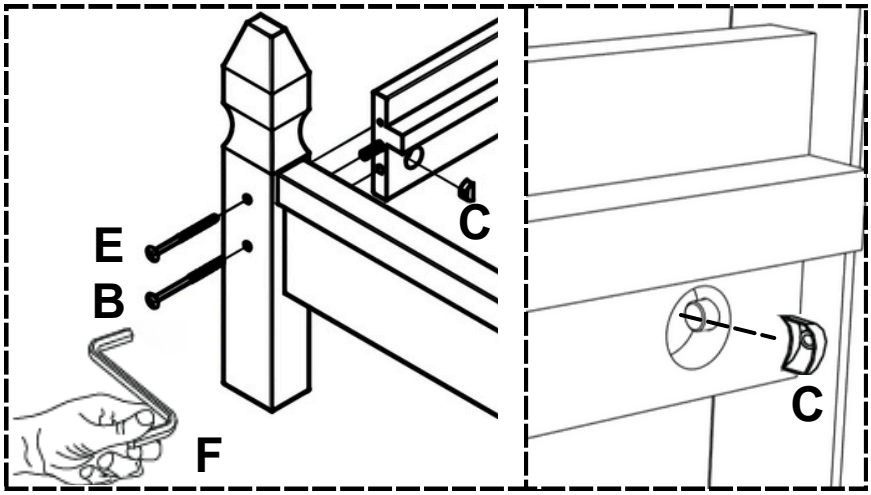

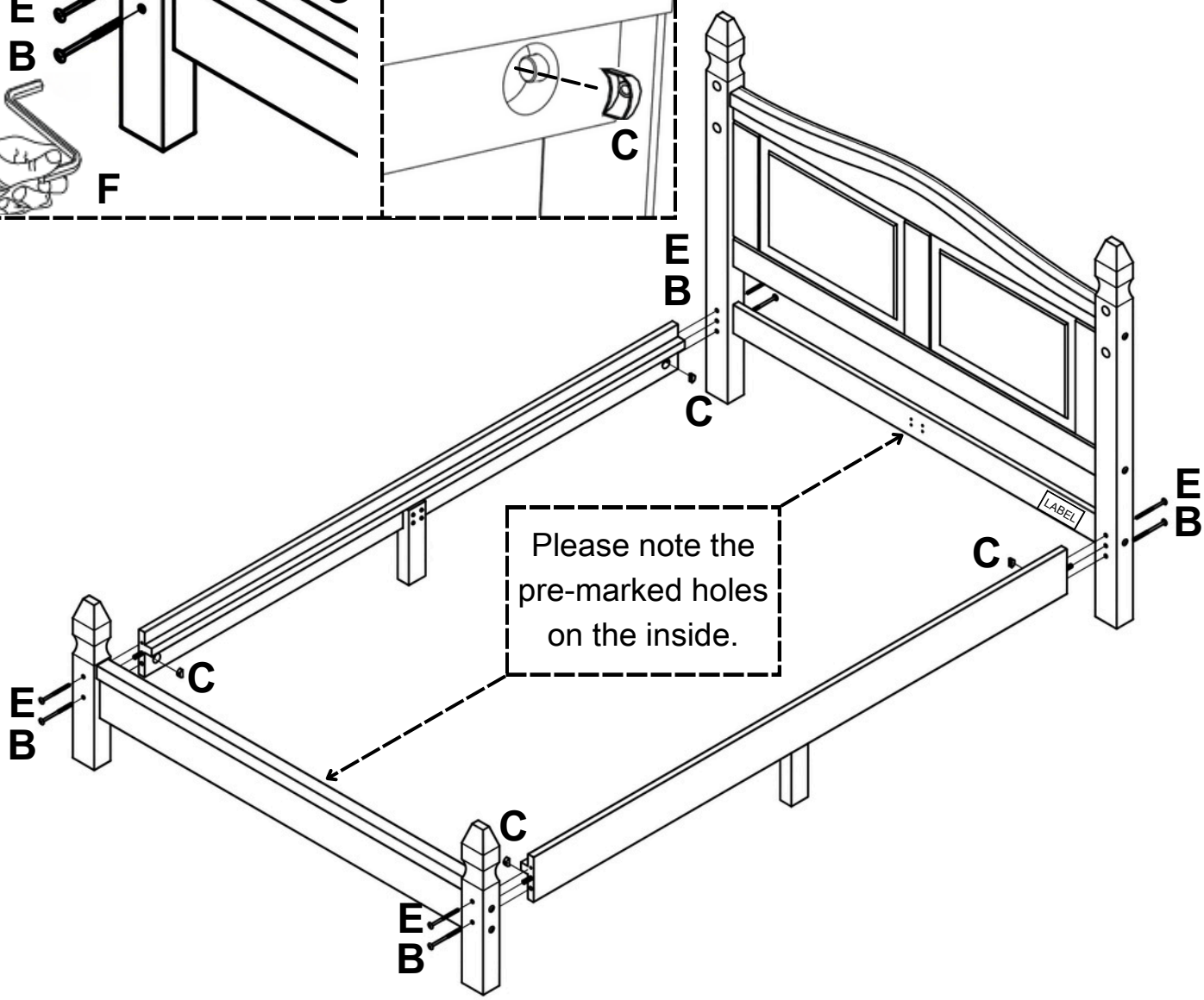

STEP 7

TOOLS REQUIRED:

PARTS REQUIRED:

HARDWARE REQUIRED:

I		**x4**
L	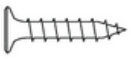 **4.0 x 16 mm**	**x8**
M	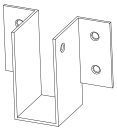	**x2**

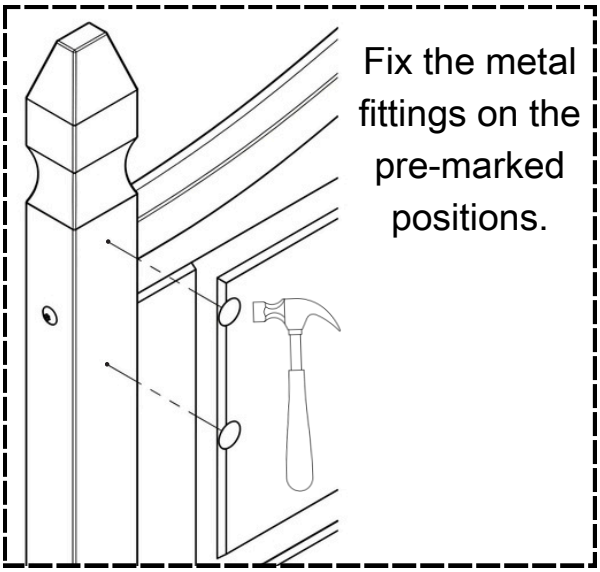

Fix the metal fittings on the pre-marked positions.

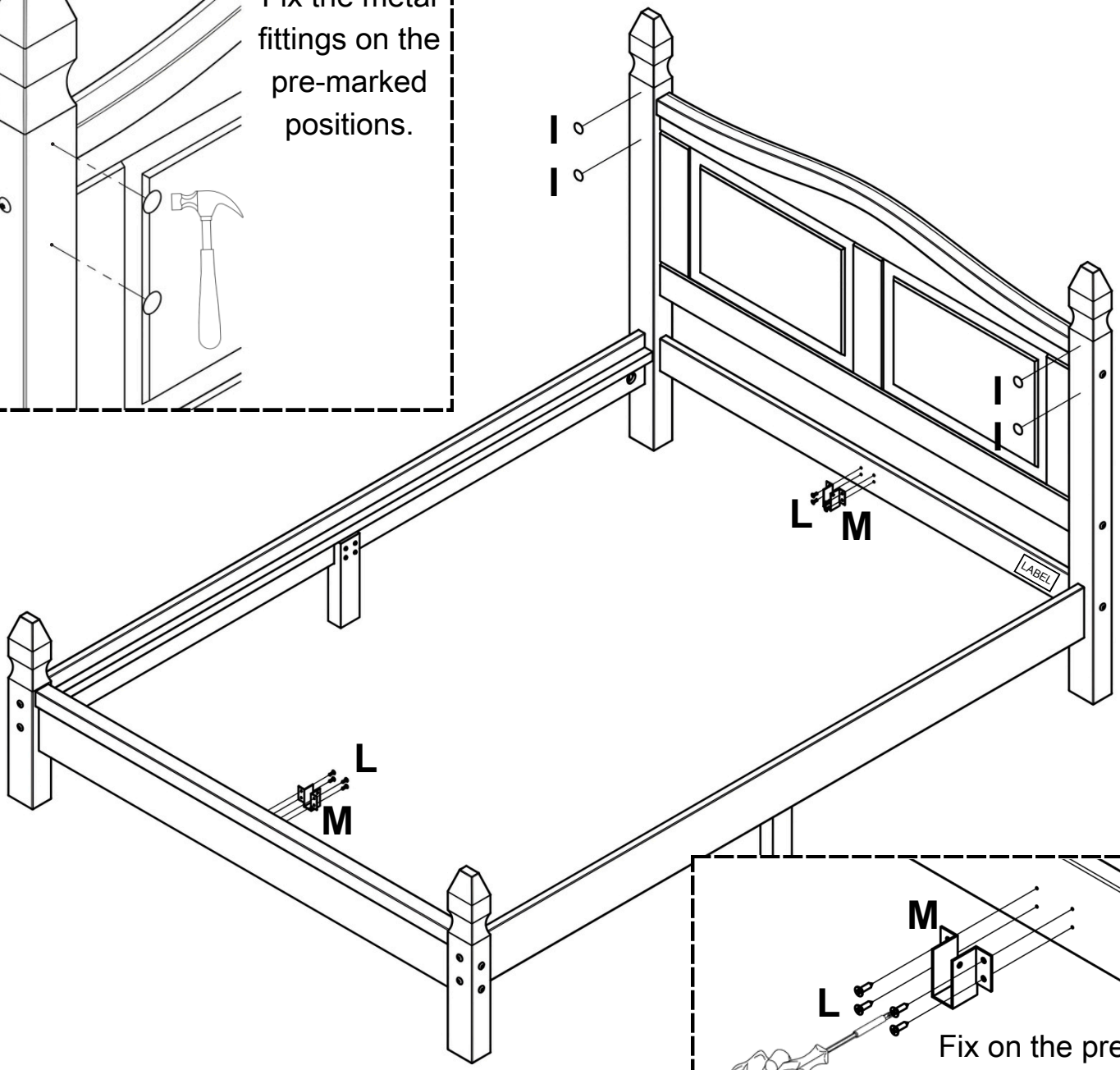

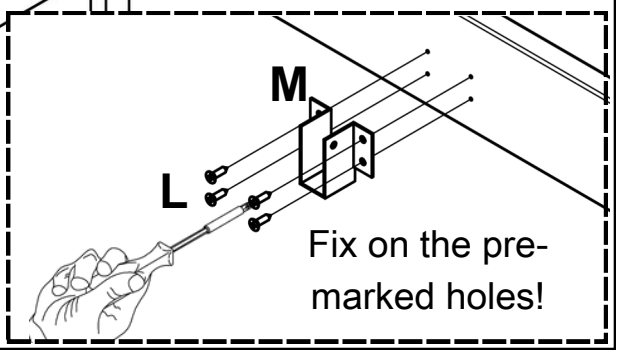

STEP 8

TOOLS REQUIRED:

PARTS REQUIRED:

10	Centre Support Rail	**x1**
11	Centre Support Leg	**x2**

HARDWARE REQUIRED:

L	**4.0 x 16 mm**	**x2**
N	**7 x 80 mm**	**x2**

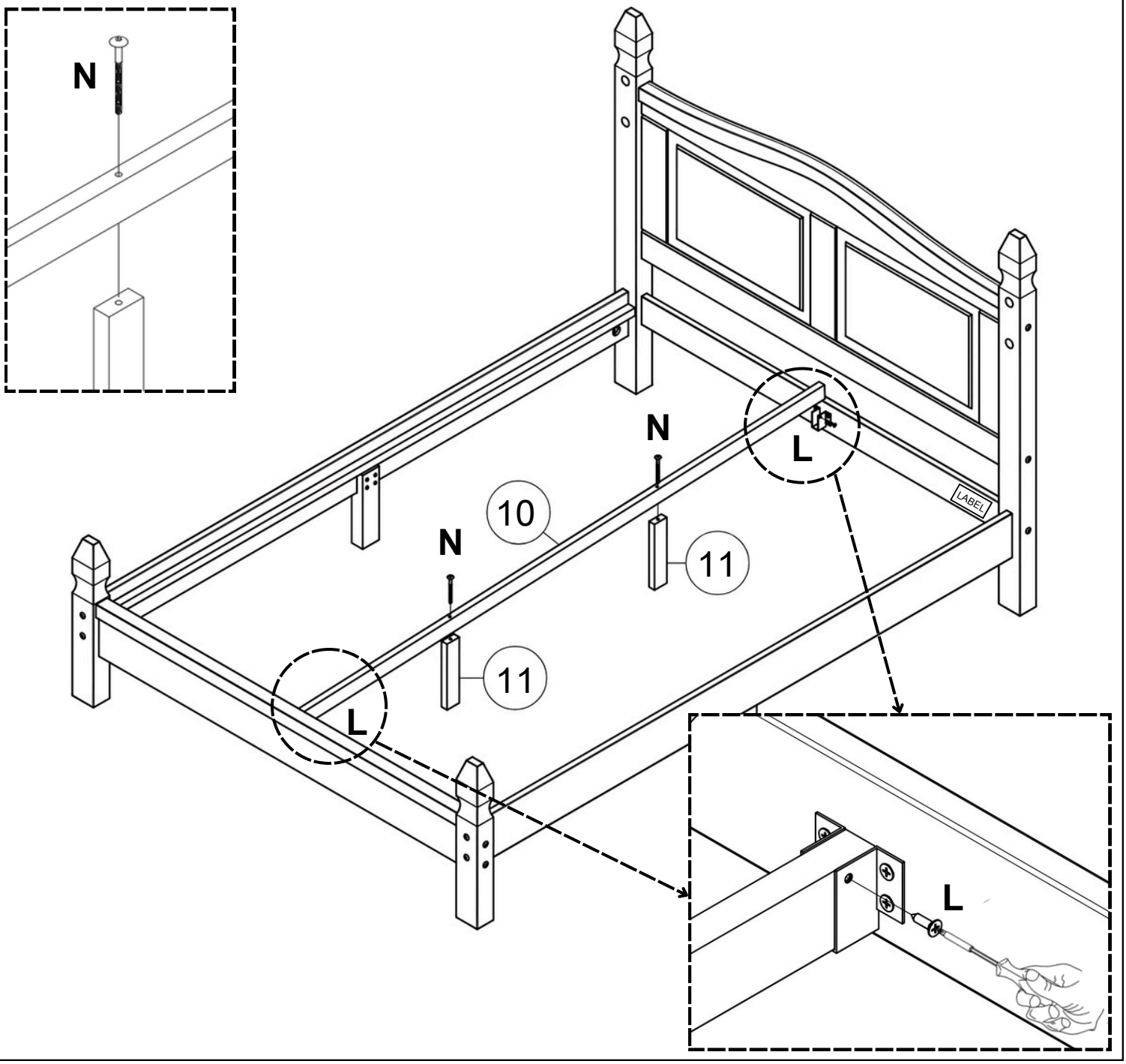

STEP 9

TOOLS REQUIRED:

PARTS REQUIRED:

12	Slats (3 Holes)	**x5**	**13**	Slats (2 Holes)	**x9**

HARDWARE REQUIRED:

G	(SPACER) (WOODEN)	**X2**
J	**3.5 x 30 mm**	**x33**

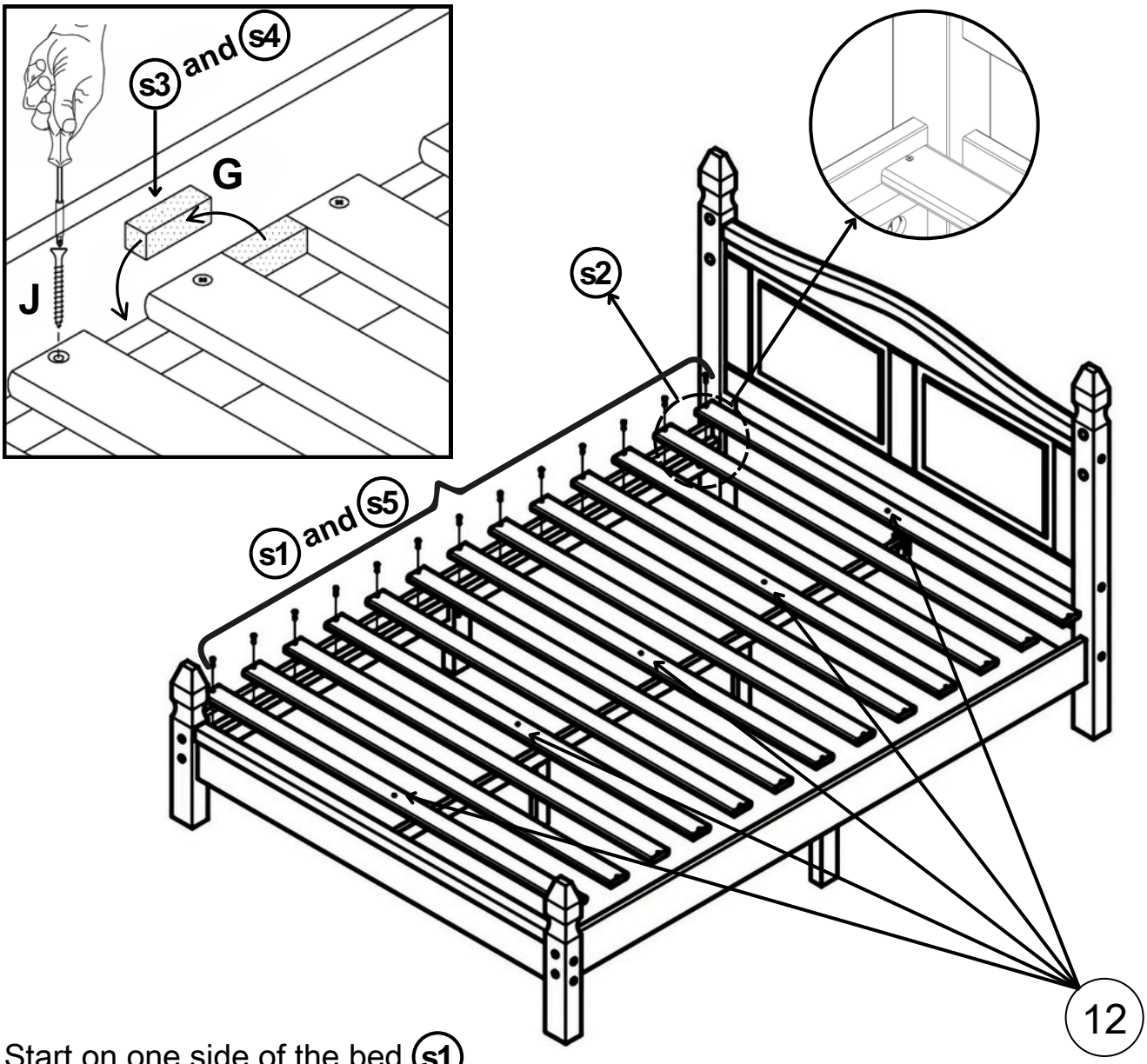

- Start on one side of the bed. s1
- Place the first slat adjacent to the headboard (Part 12). s2
- Use the spacer as shown to ensure correct spacing between the slats. s3
- Continue placing all the slats one by one, using the spacer. s4
- Fix all the slats to the first side rail (Part 8). s5

STEP 09	TOOLS REQUIRED:

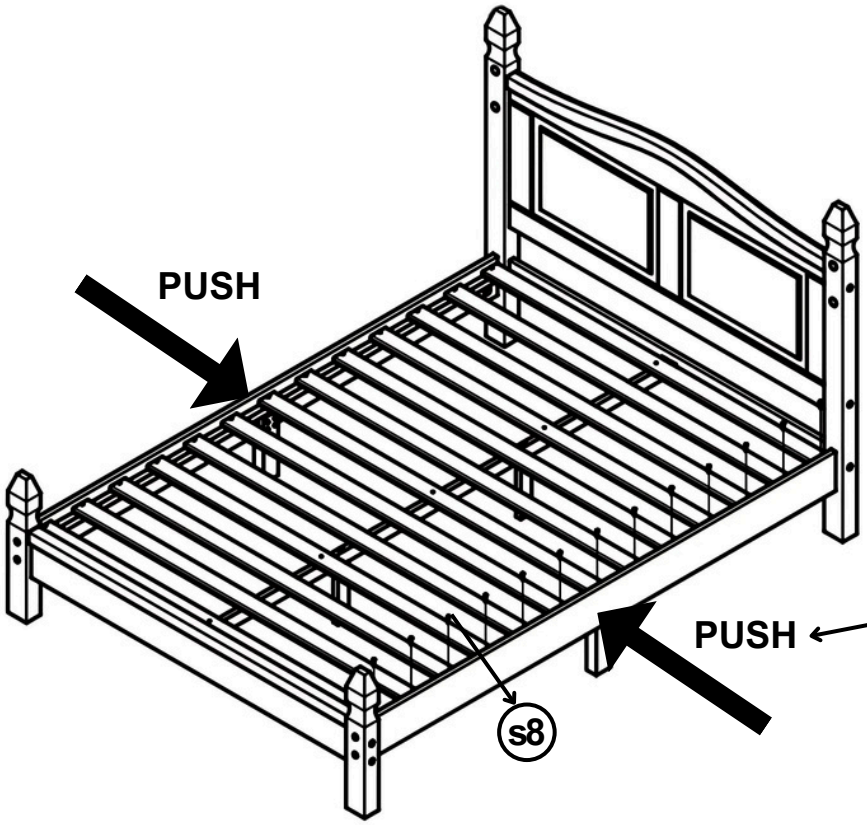

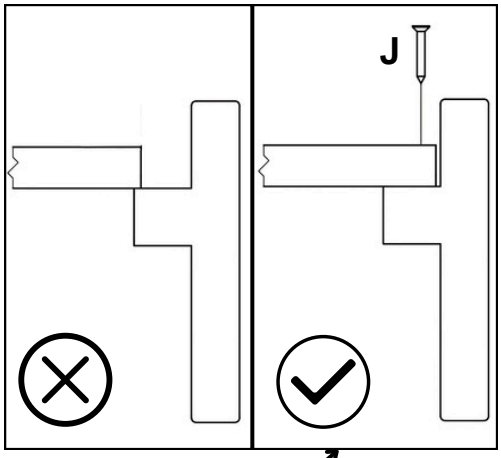

s6

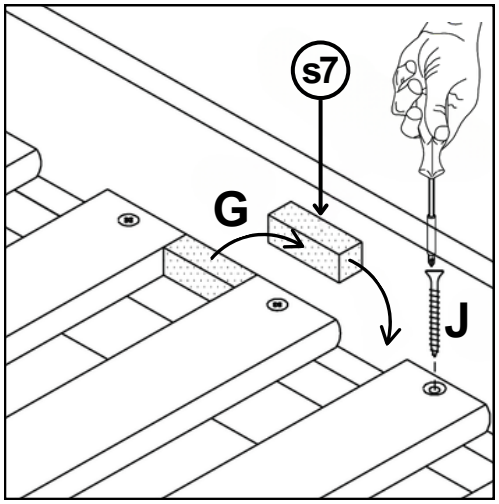

- Push the second side rail tightly against the slats. s6
- Use the spacer as shown to ensure correct spacing is maintained. s7
- Fix all the slats (Part 12 or 13) to the second side rail (Part 8). s8

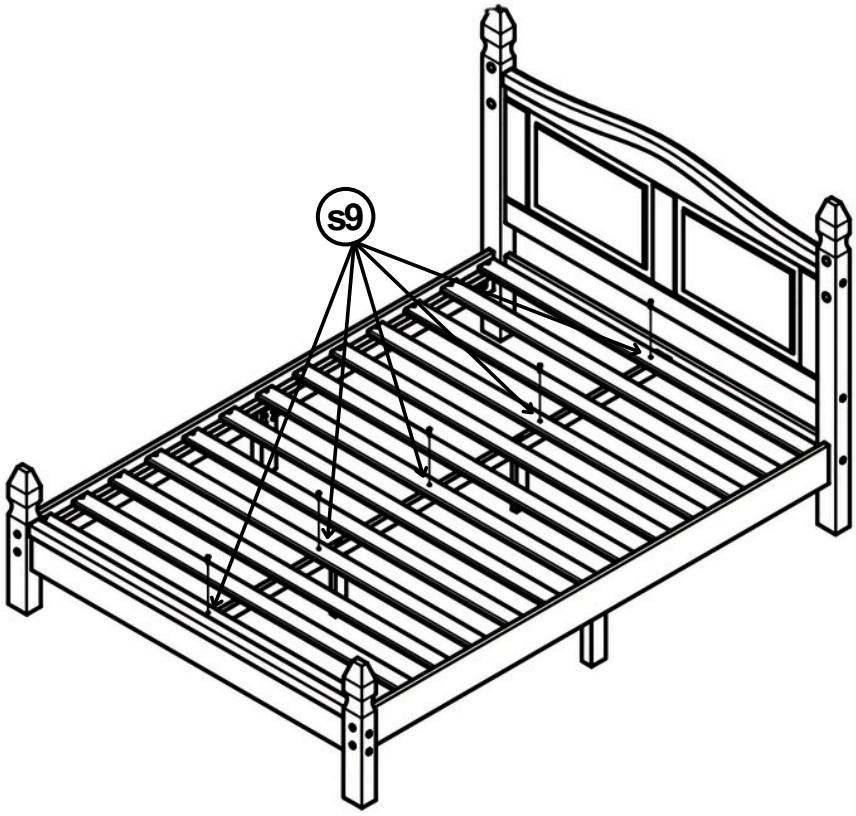

- If the central rail (Part 10) is misaligned, align it with the hole in the slat (Part 12). Once aligned, fix all the five central screws (Hardware J). s9