DREAMS IDEA

Instruction Manual



DREAMS IDEA

NO.CH0076

ABOUT US

DREAMSIDEA IS A ONE-STOP HOME

FURNISHING AND SERVICE COMPANY BASED IN USA.

WE ARE DEDICATED TO BRING YOUR DREAM HOME TO LIFE.

OUR SERVICES COVER FROM DESIGN, PRODUCTION,

DIRECT SELL, STORAGE, AND TRANSPORTATION.

IF REALITY IS THE NEAR SHORE

AND IDEALISM THE FAR SHORE,

DREAMSIDEA

AS THE FERRY BETWEEN THEM,

EAGER TO ACCOMPANY YOU ON A JOURNEY

TO YOUR IDEAL HOME.

ITEM NO.CH0076

WARRANTY

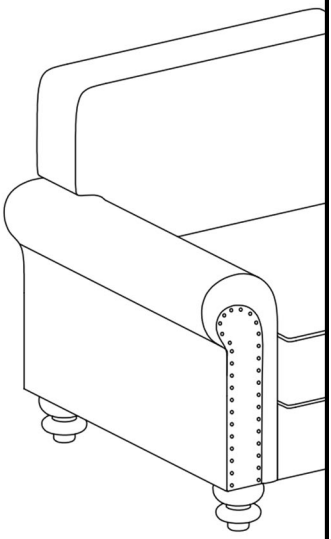

We strive to offer high quality product and we also try our best to satisfy each customer that order from us, no matter on products or services as needed. Each customer receives a record of their order, such as the order number or item receipt. For any items that are out of warranty period, you may still be able to purchase the replacement parts from our company if they are available.

Are you having difficulty
with assembly? Missing parts?
E-mail:support@dreamsidea.com
Tel:+1-562-510-9089

send an email with your order No. to us
For return, please check the return policy with the retailer or platforms you bought from.
Appreciate your purchasing from us.
Pop up your life by our furniture !

MAINTENANCE AND WARNING

Please read the manual thoroughly before you start installing.

Please keep the product away from sharp object.

Packaging and small parts may have choking hazard, please keep them away from children and pets.

Please clean the product according to each clean code, check the product description for more information.

Please keep the product away from fire.

If you have any other questions, please contact us, we will be glad to help you out.

If the product is placed under direct sunlight, the pattern or color might fade away overtime.

Check the product periodically to make sure everything is secured and tightened.

Always use proper tools for installation.

Do not jump on the product.





Two people





Around 35 min

PRODUCT DESCRIPTION

Classic armchair with rolled arms. Features a simple but classic silhouette. The signature wide rolled arms combined with plump seat and back cushions exude rich vintage charm and a solid sense of craftsmanship.

Cotton-linen blend fabric. Offers a natural, breathable, and skin-friendly touch, combining the softness of cotton with the texture of linen.

Oversized backrest and seat cushion. Compared to standard armchairs, the taller, wider backrest and deeper seat provide more comprehensive body support, offering excellent envelopment and bolstering for significantly enhanced comfort.

Solid wood frame and solid wood gourd-shaped legs. A sturdy internal wood frame ensures long-term stability and load-bearing capacity. The distinctive solid wood gourd-shaped legs at the base add elegant vintage outlook while enhancing overall stability and design detail.

Multi-functional relaxation core. Serves as both a comfortable solitary reading chair and a tasteful accent chair in the living room, either as a statement master chair or flexible as the sofa. Its substantial presence and unique design inject steady and style into any corner.

EXPLODED VIEW

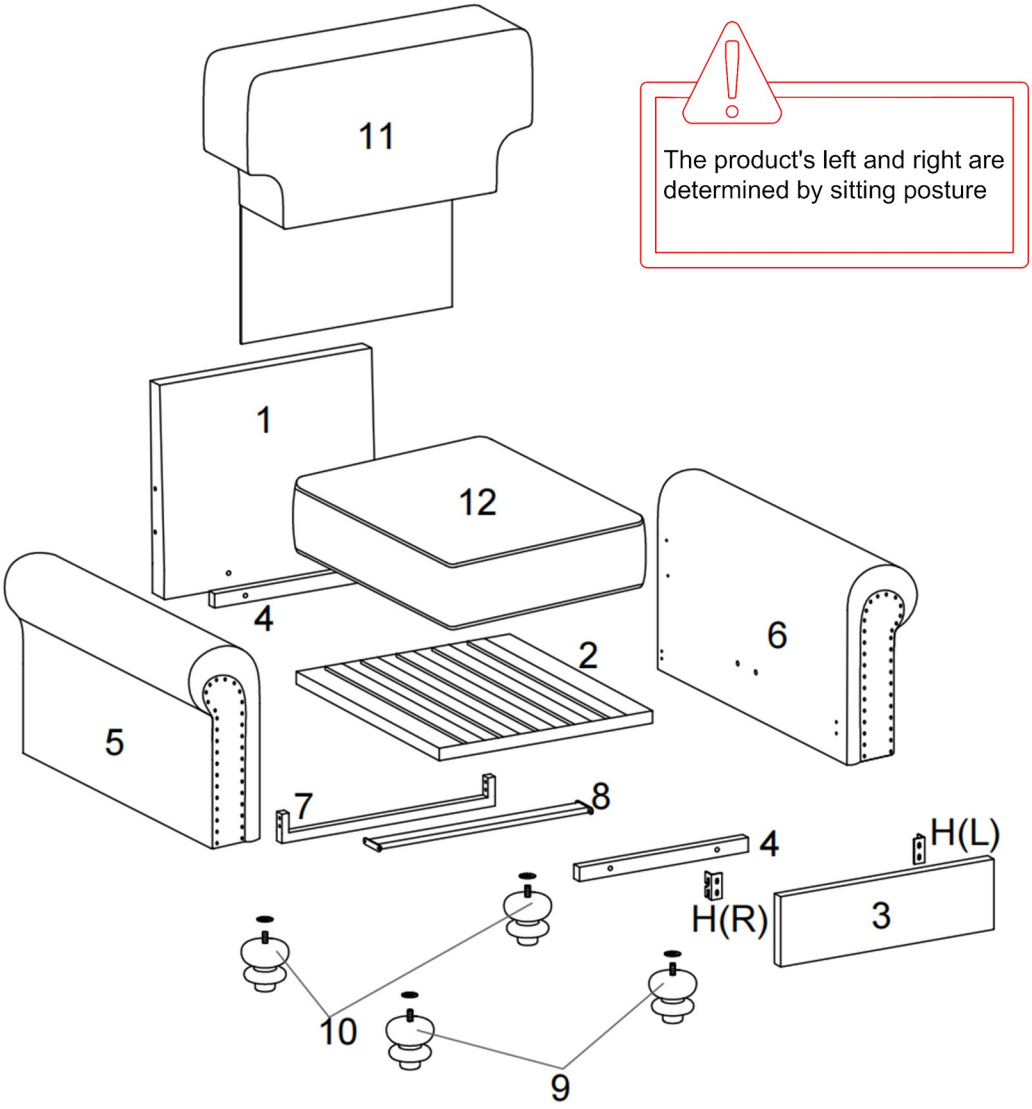

The product's left and right are determined by sitting posture

PARTS

5*1

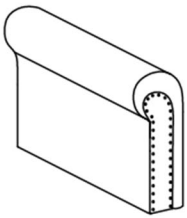

Right arm

6*1

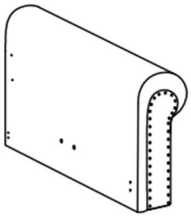

Left arm

1*1

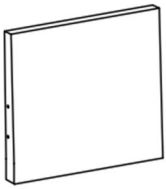

Backrest

8*1



Connect bar

7*1



Rear connect bar

3*1



Front panel

4*2



Rail bar

12*1

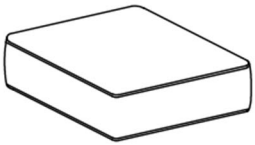

Seat cushion

11*1

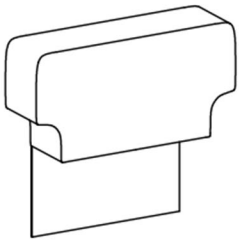

Back cushion

2*1

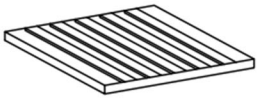

Seat frame

9*2



Front legs



Rear legs

HARDWARE

TOOL LIST

A*4



M6*16mm
Bolts

B*10



M6*30mm
Bolts

C*6



M6*35mm
Bolts

D*4



M6*60mm
Bolts

E*12



Flat washer

F*4

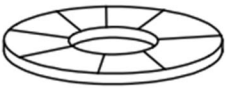

Plastic washer

G*1



Allen key

H*1



Connecting iron plate

Please make sure all hardware&packing material fitting the list. Especially some small accessories may be missing during transportation. Please contact us if you have any question.

step 1 ---Cut the plastic air compression bags

Cut the plastic air compression bags, and take out the cushion (11&12). Let it recover to its original shape, the whole recovery process might take 48 hours, you may gently slap on it to speed up the process.

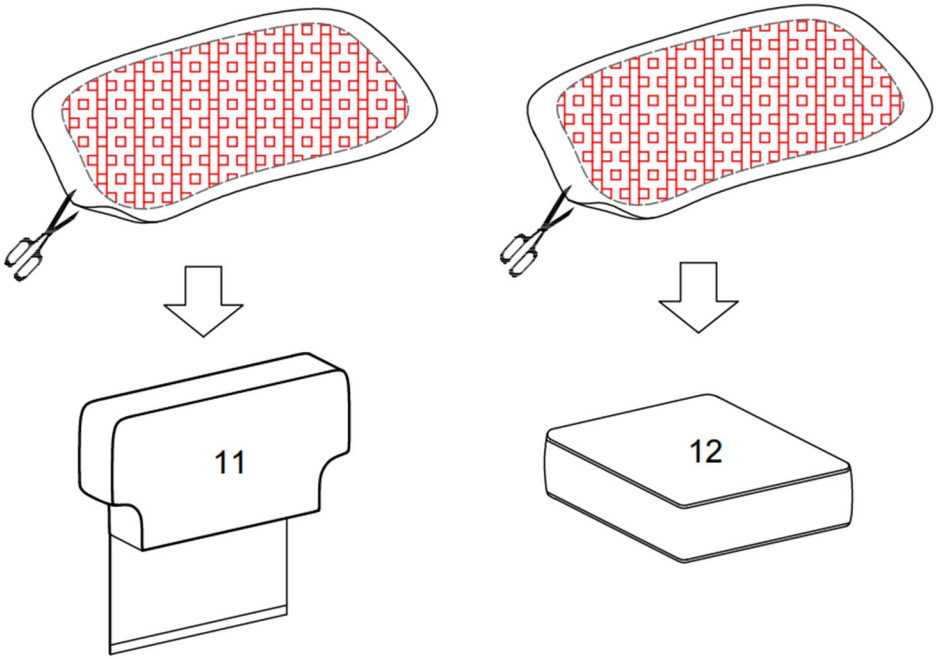

Please exercise caution when opening the packaging to avoid injury or damage to the product.

step 2 ---Take out the chair components

Take out the chair components from the Armrest frame.

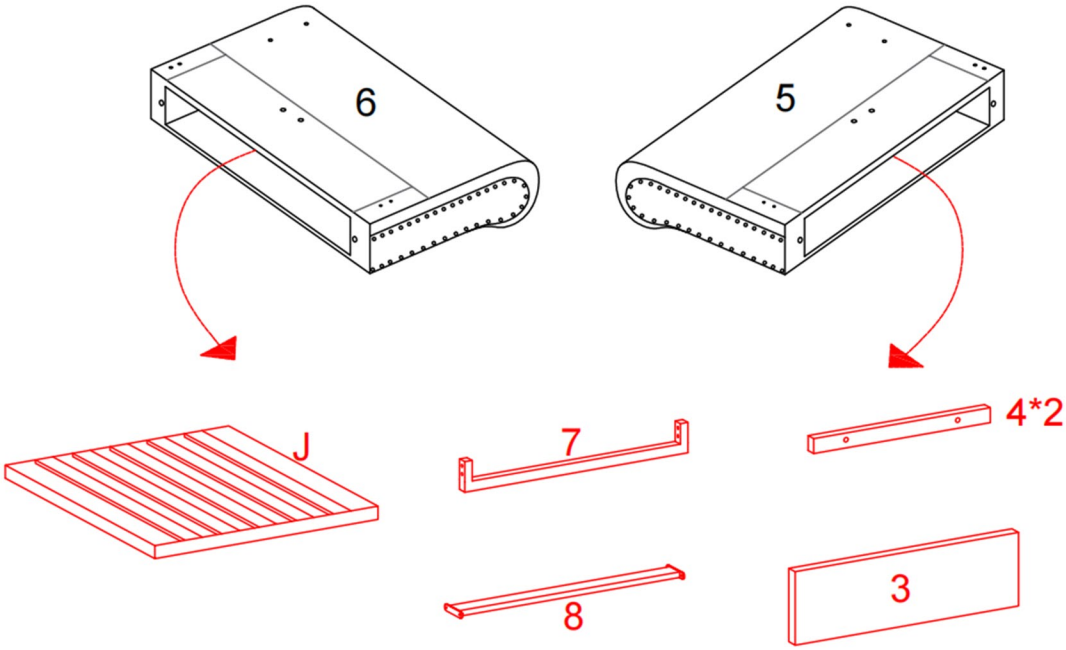

step 3 ---Install the Rail bar (4) and Connecting iron plate (H)

As shown in the diagram, first attach the Rail bar (4) to the Front panel (3),Use the allen key (G) provided to tighten Bolts(B) and Flat washer (E).

Attach the Connecting iron plate (H) to the Front panel (3),Use the allen key (G) provided to tighten Bolts(A) .

Note: Make sure the Velcro on the wooden strip faces the arrow direction shown in the figure.

We suggest tightening the bolts for 30-50% first, make sure the process is correct and bolt holes are aligned, then fully tightening them all.

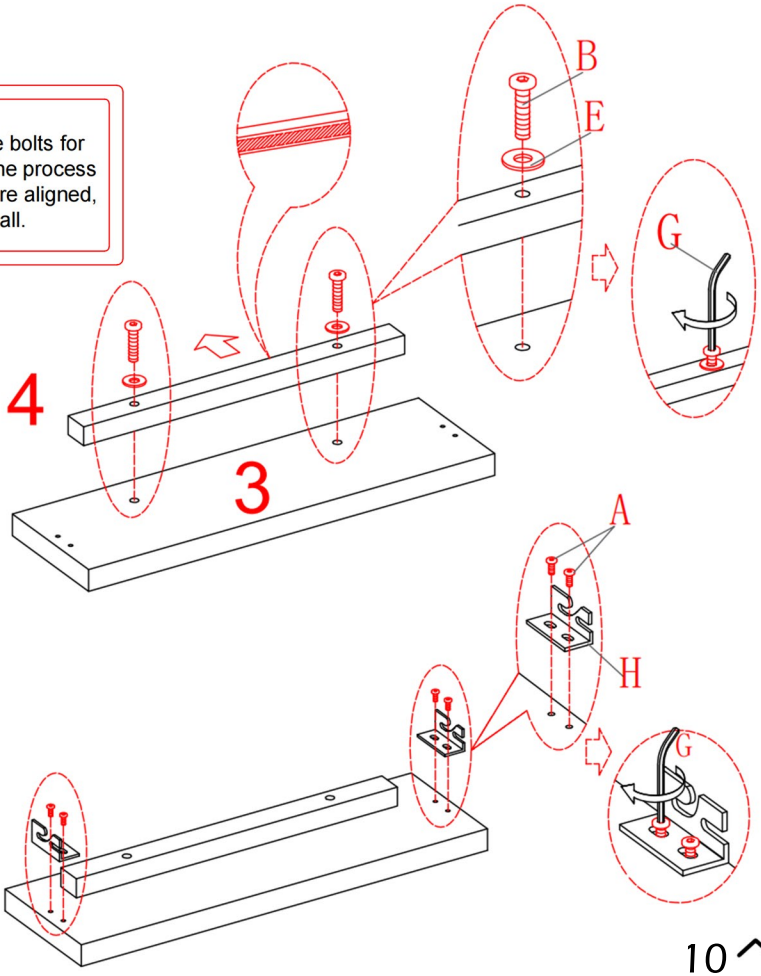

step 4

Pre-install Bolts (B) into the corresponding holes of the Armrest as shown in the figure, screw in 30%.

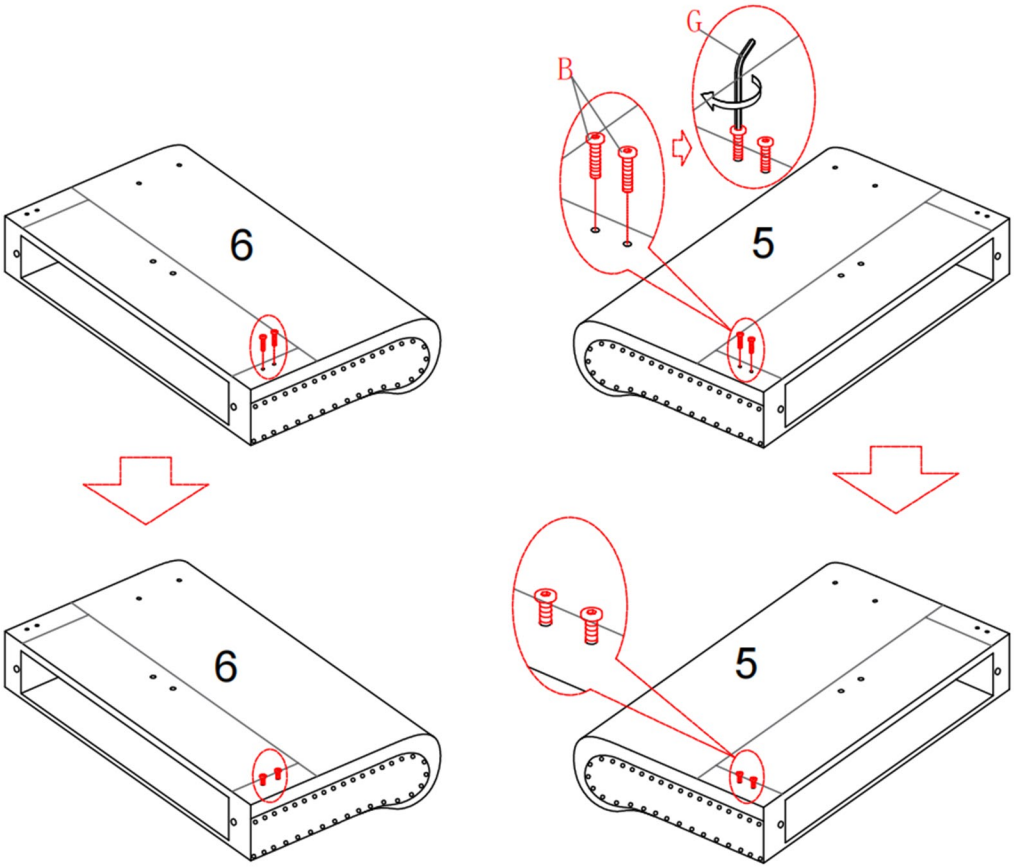

step 5 ---Install front panel (3)

Slide the front panel into the corresponding position as shown in the figure, tighten it with Allen key (G)

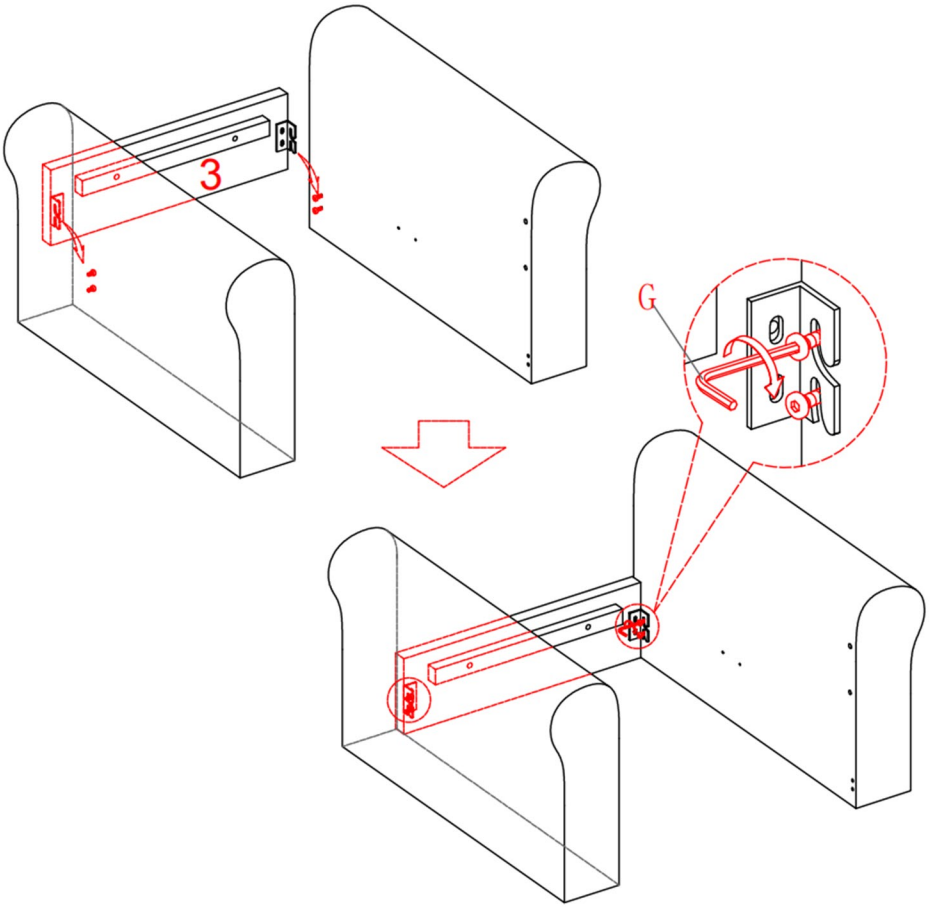

step 6 ---Install the Rail bar (4)

As shown in the diagram, first attach the Rail bar (4) to the Backrest (1),Use the allen key (G) provided to tighten Bolts(C) and Flat washer (E).

Note: Make sure the Velcro on the wooden strip faces the arrow direction shown in the figure.

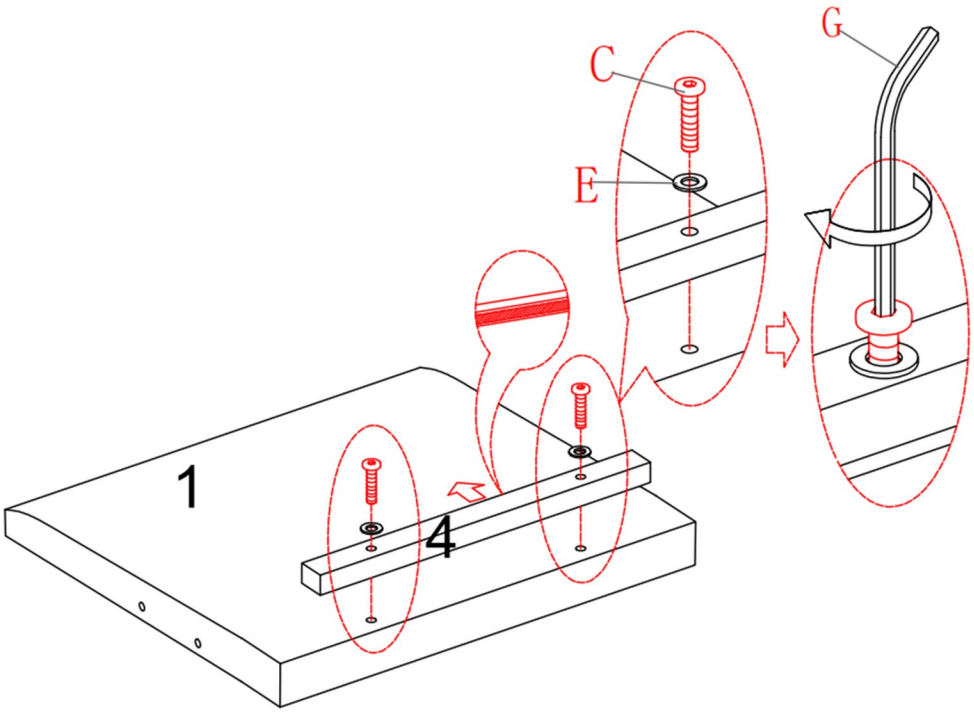

step 7 ---Install the Backrest (1)

Install the Backrest (1) between the Armrests (5& 6).
Use the allen key (G) provided to tighten all four Bolts(D) and Flat washer (E), DO NOT tighten the Bolts completely.

We suggest tightening the bolts for 30-50% first, make sure the process is correct and bolt holes are aligned, then fully tightening them all.

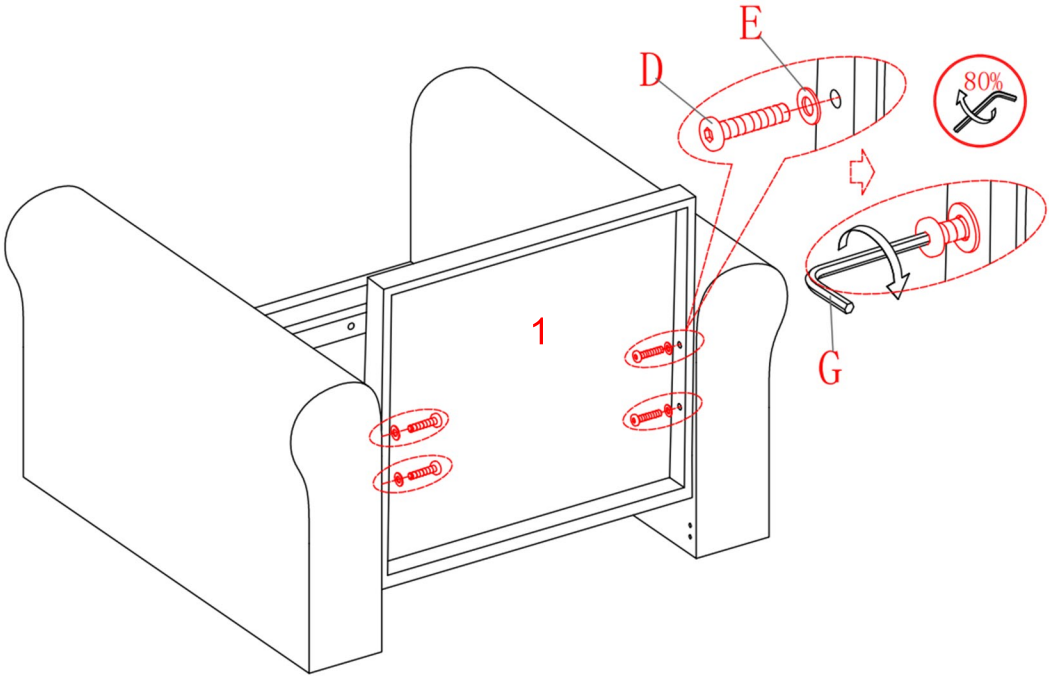

step 8 ---Install the Rear Connect Bar (7)

Then, install the Rear Connect Bar (7) between the Armrests (5 & 6).
Use the allen key (G) provided to tighten all four Bolts(C), DO NOT tighten the bolts completely.

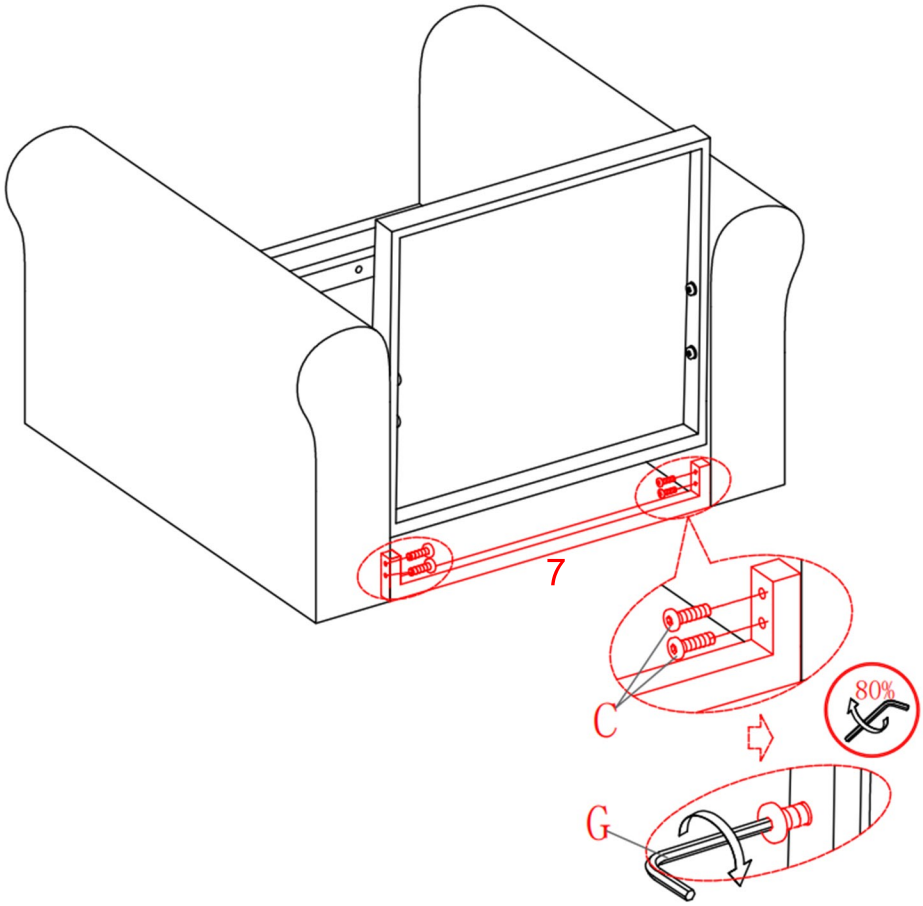

step 9 ---Install the legs (9&10)

Flip the frame again. Place the plastic washer (F) on it and then twist the Wooden Legs (9&10) into the bottom of the armrests by screwing them in.

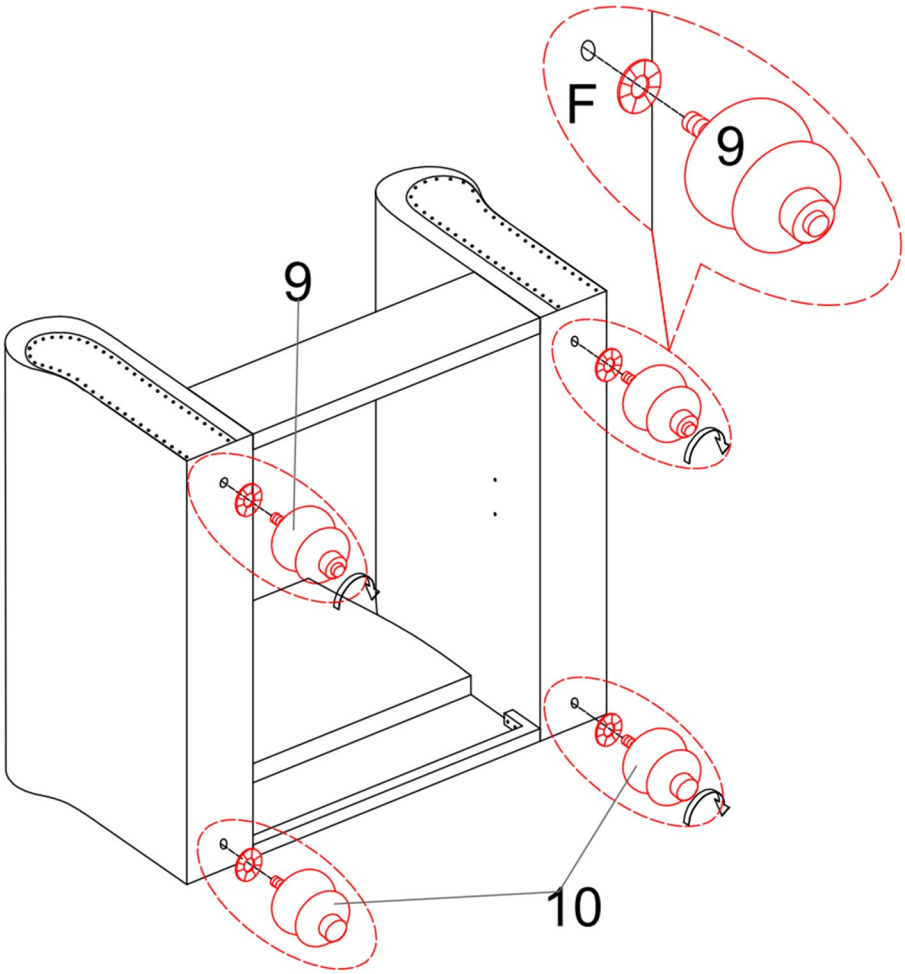

step 10 ---Install the Connect Bar (8)

Install the Connect Bar (8) between the Armrests (5 & 6).
Use the allen key (G) provided to tighten all four Bolts(B) and Flat wahser (E), DO NOT tighten the bolts completely.
Note:Please ensure Connect bar(8) is positioned with the Velcro side facing up as shown in the figure.

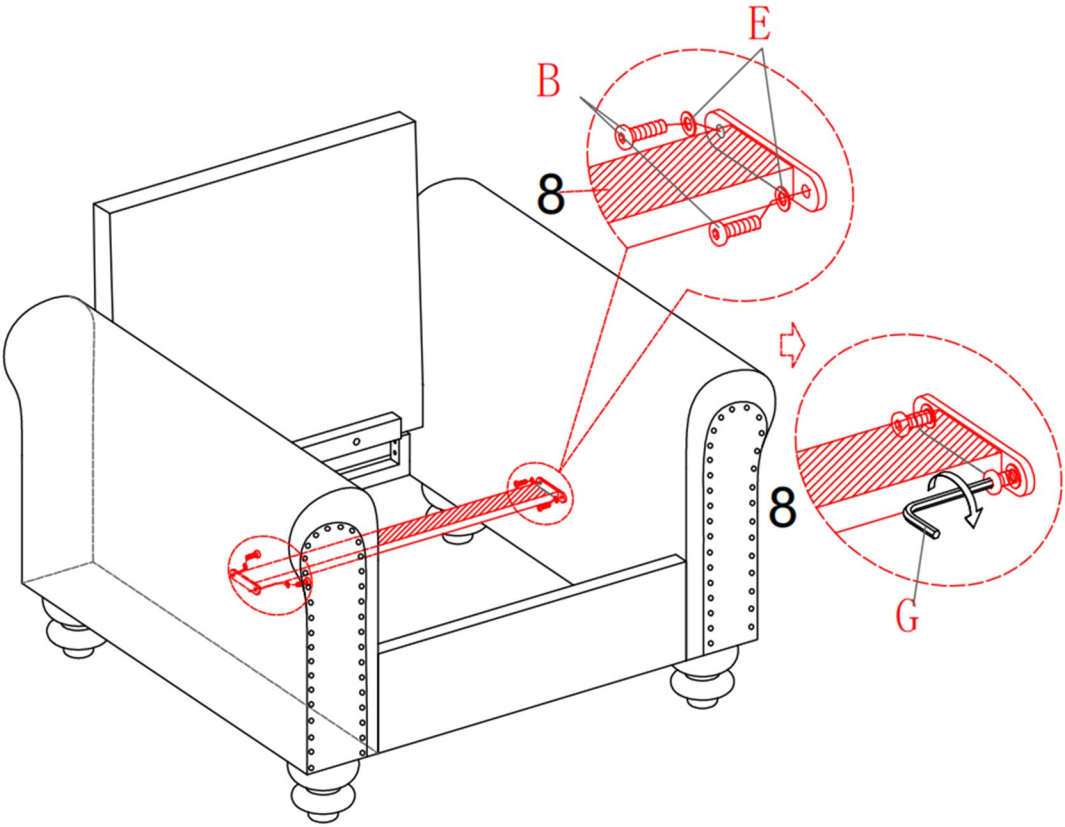

step 11

Tighten all bolts.

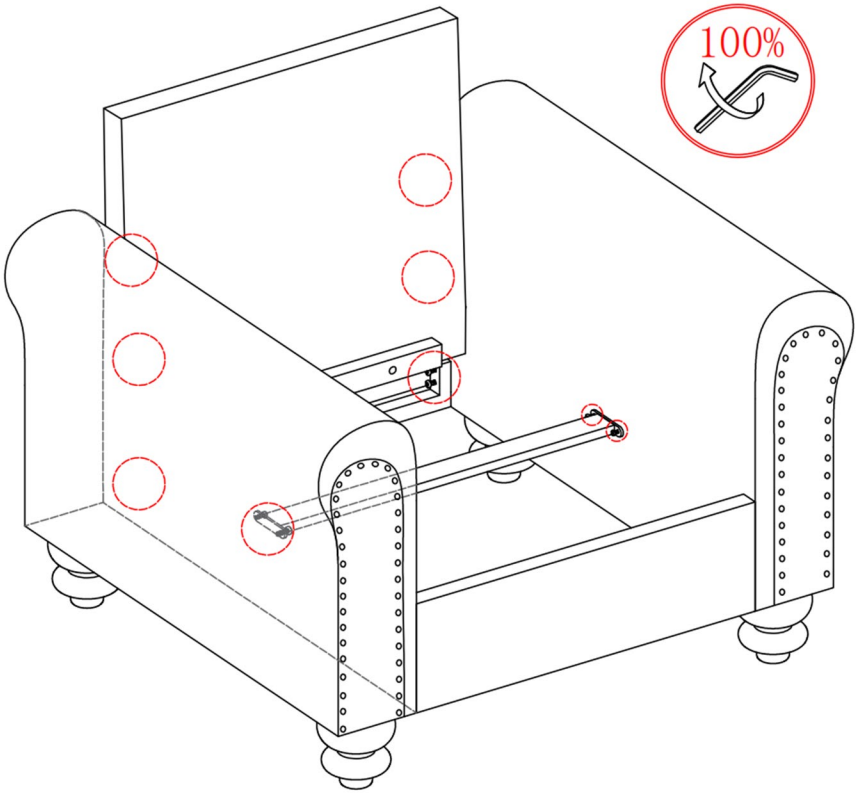

step 12 ---Place the Seat frame (2)

Lay the seat frame (2) flat and align it with the position shown in the figure.

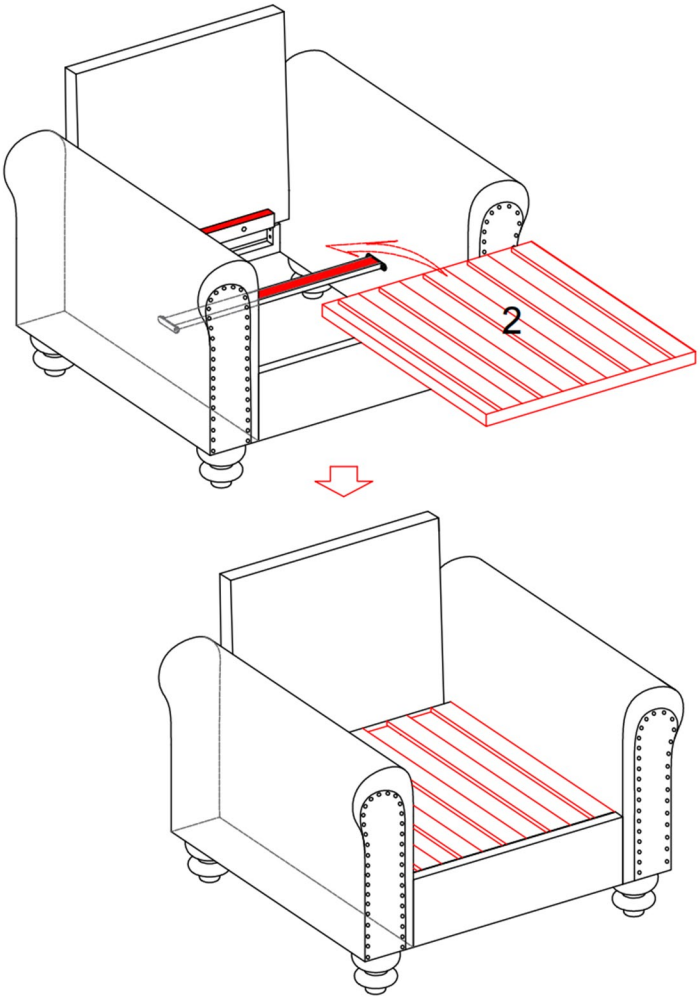

step 13 ---Place the Seat cushion (12)

Place the Seat cushion (12) on it.

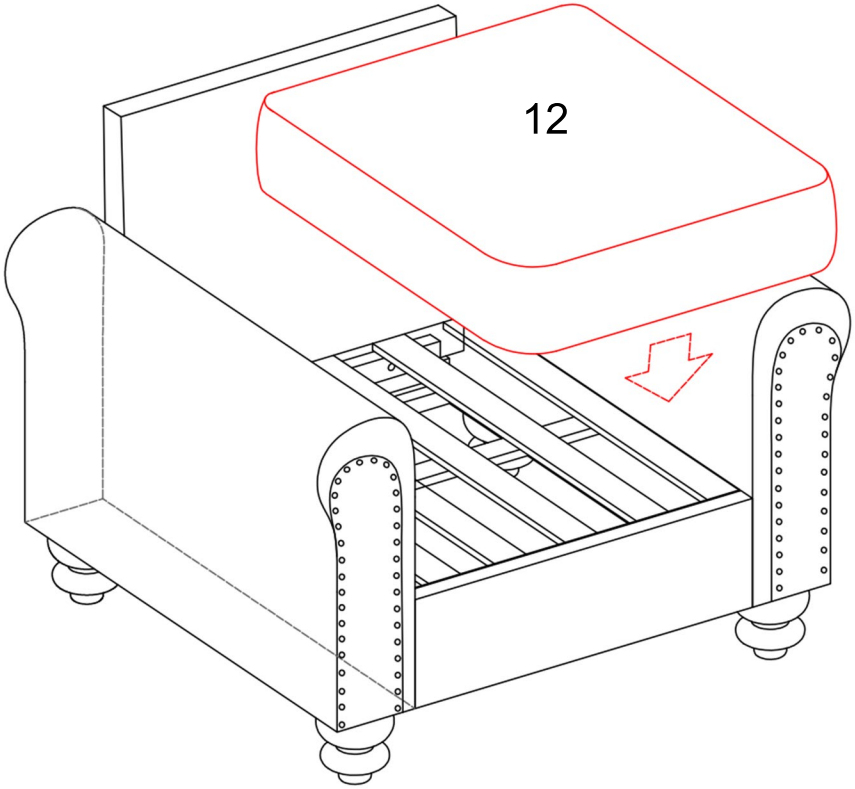

step 14 ---Install the Back cushion

Slide the Back Cushion (11) over the Back Frame. Secure the velcro flap at the bottom/back as illustrated.

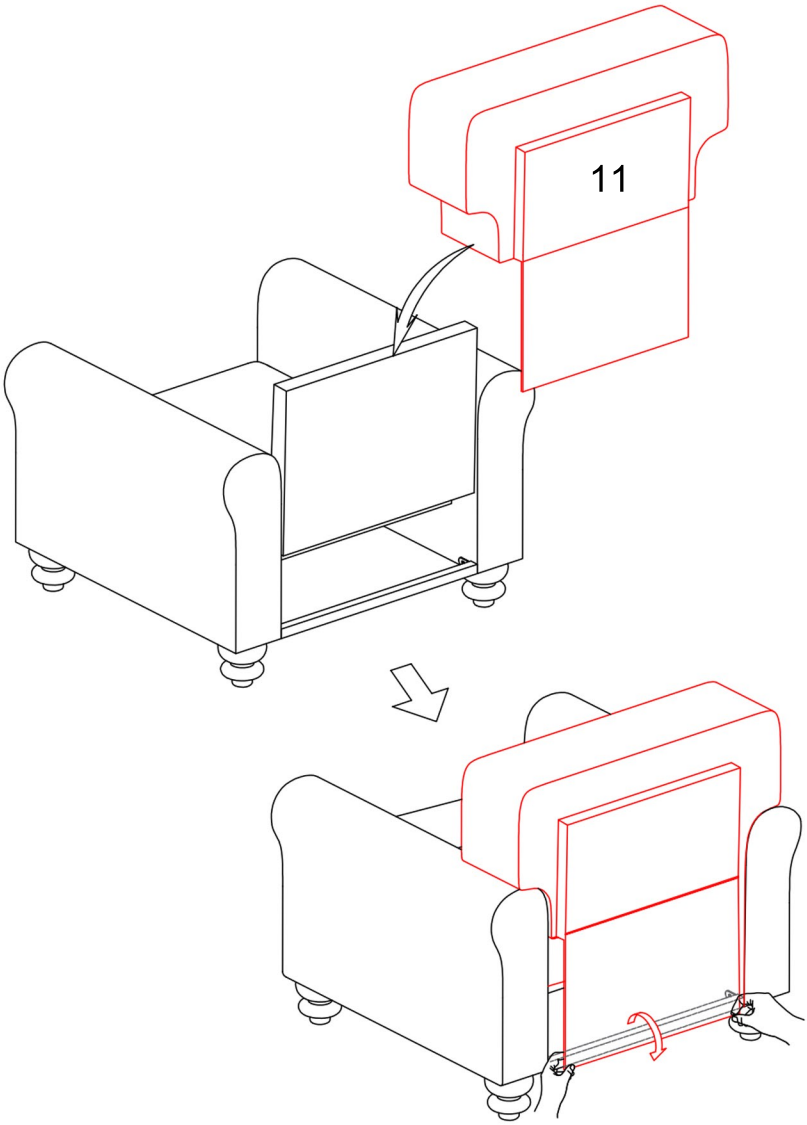

step 15 ---Adjust chair leveling feet

Please note: the legs of the chair can be adjusted by twisting the leveler on the tip of the legs as shown, it can help you use this chair on ground that is not flat, please check before you use the chair.

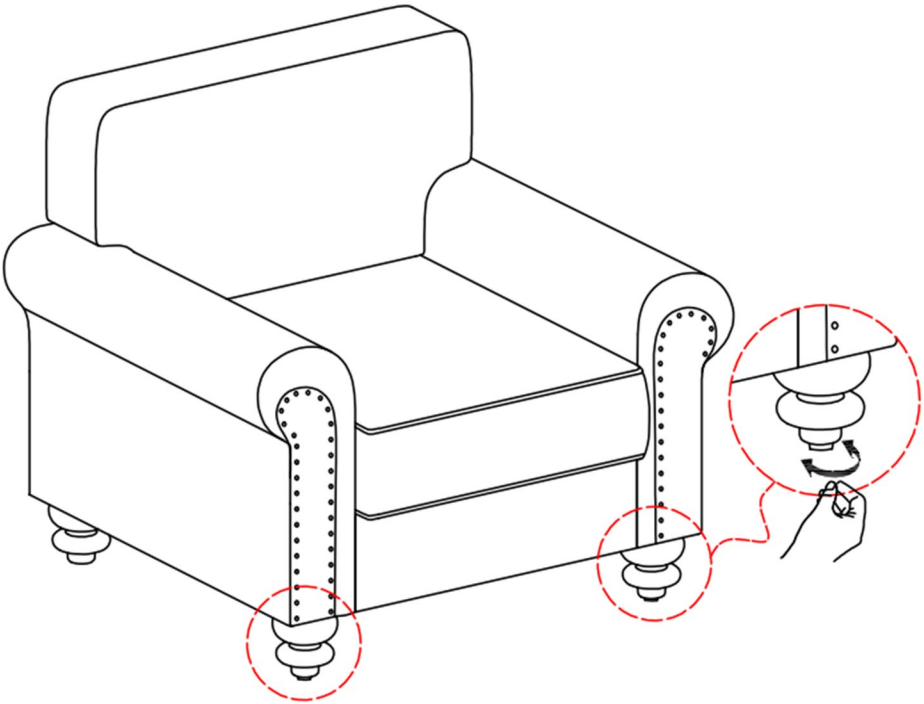

ASSEMBLY INSTRUCTIONS

Tel.+1-562-510-9089

E-mail:support@dreamsidea.com

https://www.dreamsidea.com