Brea 206cm 3 Seater Sofa

www.laura-james.co.uk

1702060.11
1702061.11
1701503.11

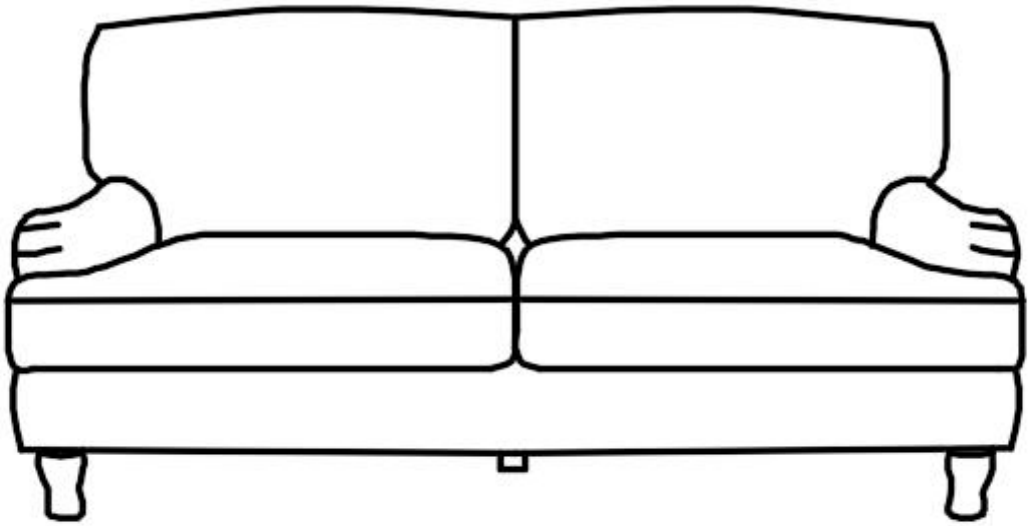

CONTENTS

Safety and care advice	1
Components	2
Assembly instructions	4
Copyright	8

⚠ SAFETY AND CARE ADVICE ⚠

PLEASE READ THESE INSTRUCTIONS CAREFULLY AND KEEP FOR FUTURE REFERENCE

- **Warning:** Please lift with care.
- Check you have all the components and tools listed on pages 2 and 3.
- Remove all fittings from the plastic bags and separate them into their groups.
- Keep children and animals away from the work area, small parts could choke if swallowed.
- Make sure you have enough space to lay out the parts before starting.
- Do not stand or put weight on the product, this could cause damage.
- Assemble the item as close to its final position (in the same room) as possible.
- Assemble on a soft level surface to avoid damaging the unit or your floor (use opened out unit carton).



- We do not recommend the use of power drill/drivers ***for inserting screws***, as this could damage the unit. Only use hand screwdrivers.
- Dispose of all packaging carefully and responsibly.

CARE AND MAINTENANCE

- Only clean using a damp cloth and mild detergent, do not use bleach or abrasive cleaners.
- From time to time check that there are no loose screws on this unit.
- This product should not be discarded with household waste. Take to your local authority waste disposal center.

Note *If required the next page can be cut out and used as reference throughout the assembly. Keep this page with these instructions for future reference.*

COMPONENTS

Please check you have all the panels listed below:

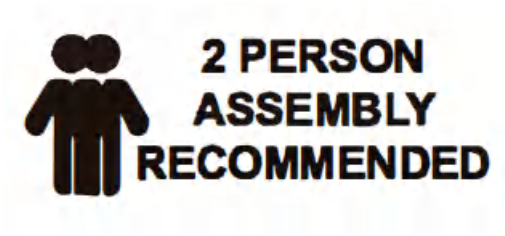

1

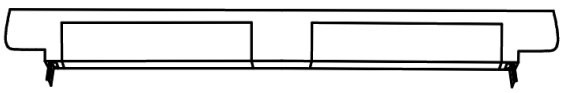

×1

2

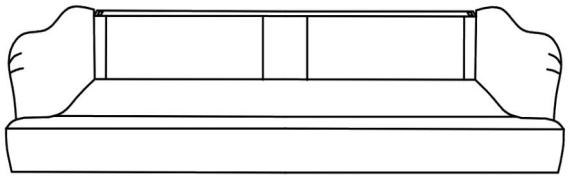

×1

3

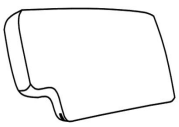

×1

4

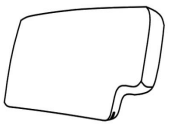

×1

5

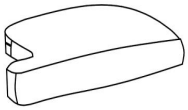

×1

6

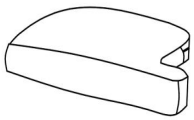

×1

7



×2

8



×2

9



×1

1:Backrest	x1	6:Seat cushion(right)	x1
2:Seat frame	x1	7:Front legs	x2
3:Back cushion(left)	x1	8:Back legs	x2
4:Back cushion(right)	x1	9:Middle leg	×1
5:Seat cushion(left)	x1		

COMPONENTS

Please check you have all the fittings listed below:

A M6 × 2.5cm	B	C	D
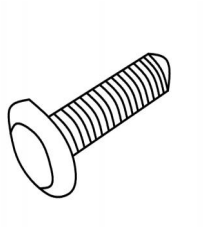		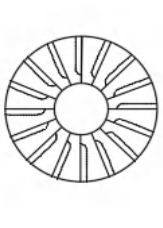	
× 8	× 8	× 3	× 1

ASSEMBLY INSTRUCTIONS

Step 1

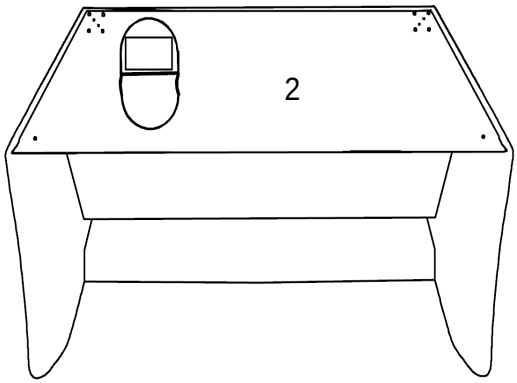

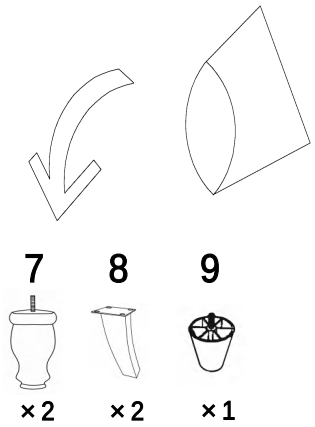

Unzip the bottom of the seat frame and remove the legs and the fixing kit.

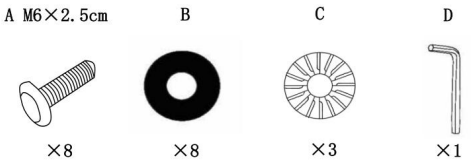

Step 2

D		1
A		8
B		8

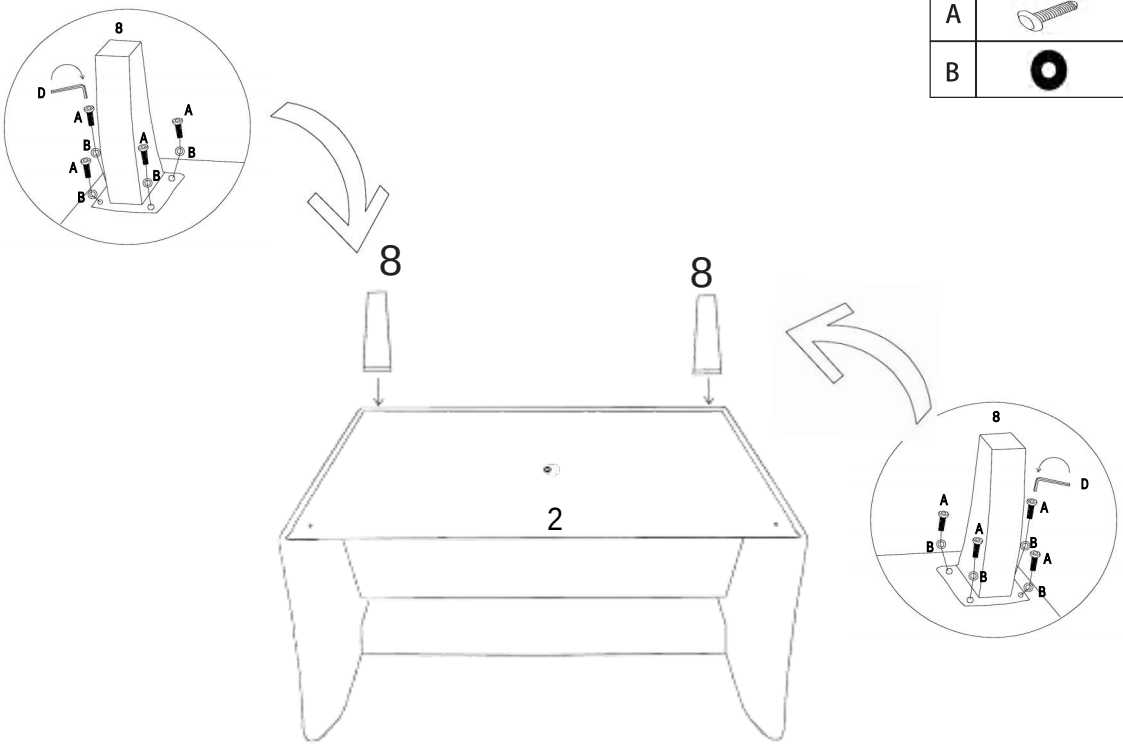

ASSEMBLY INSTRUCTIONS

Step 3



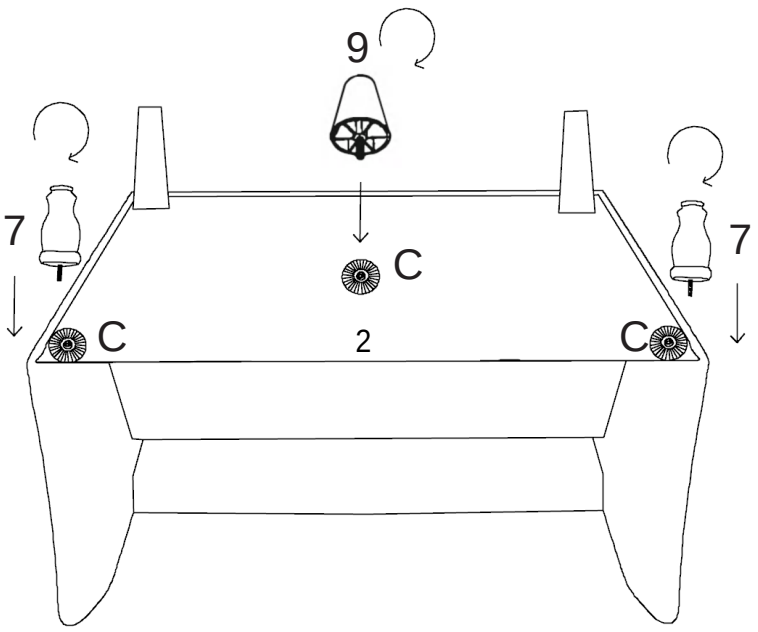

Step 4

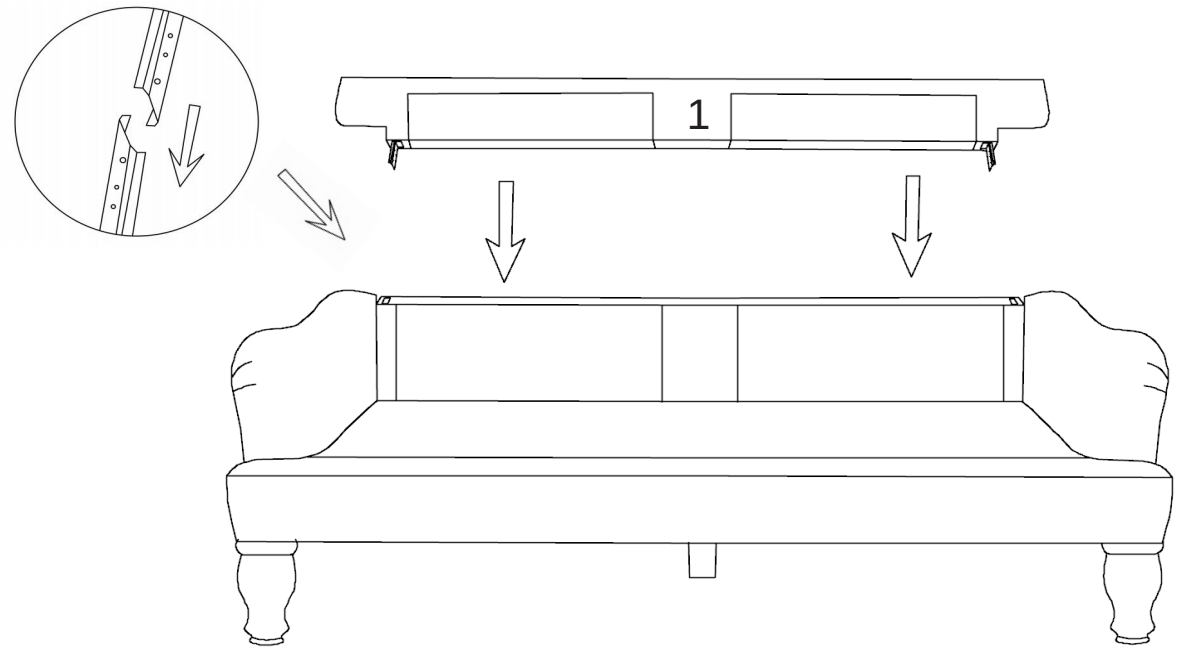

ASSEMBLY INSTRUCTIONS

Step 5

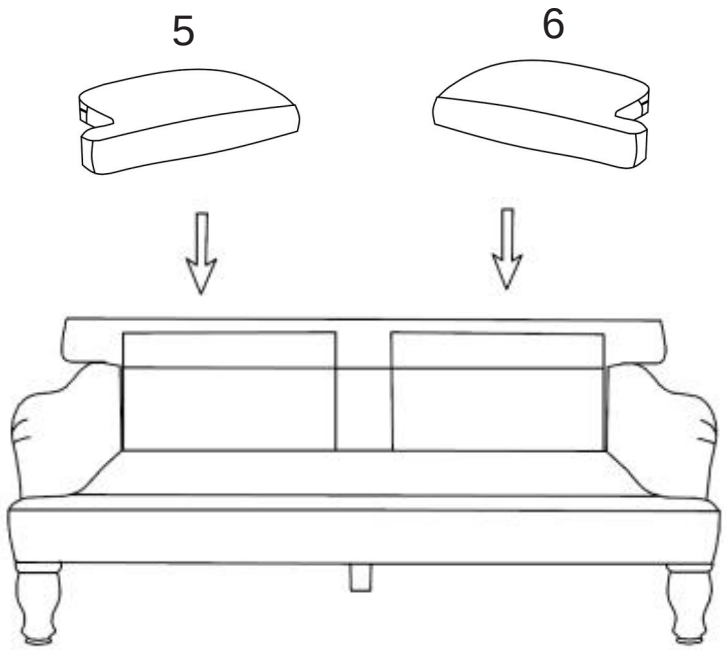

Step 6

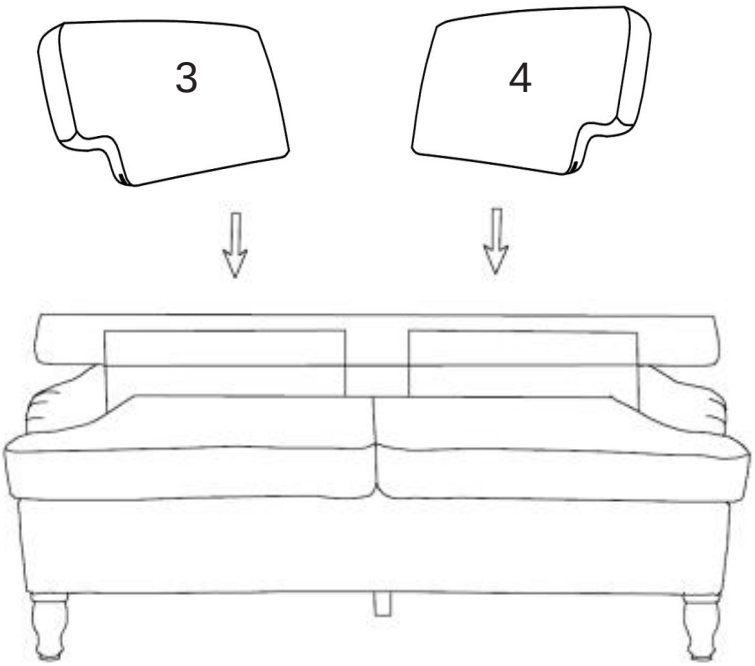

ASSEMBLY INSTRUCTIONS

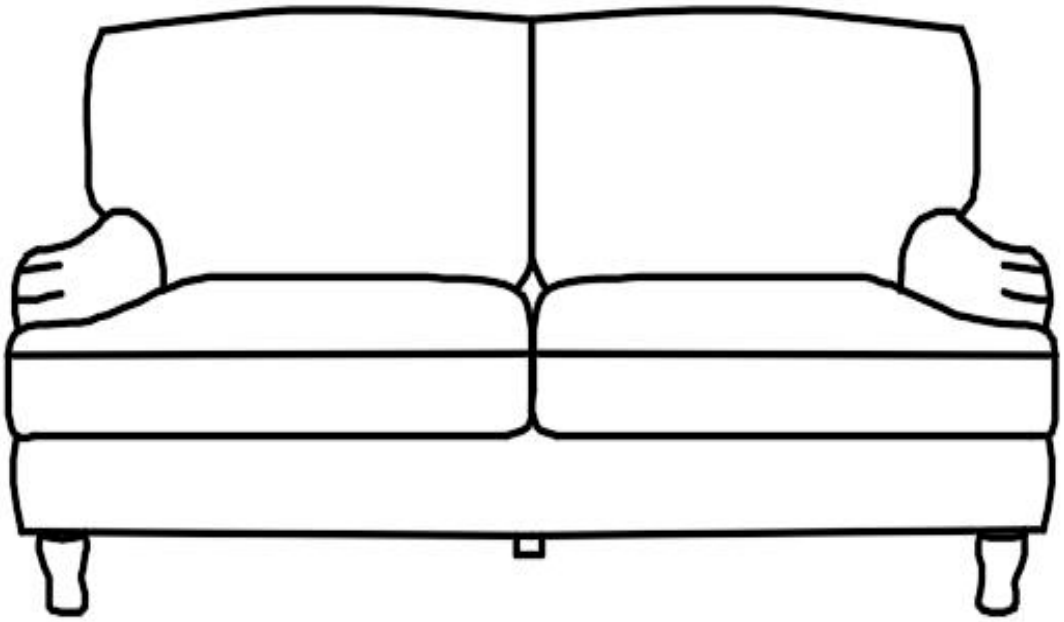

Congratulations! Now you have finished assembling the product.

IF YOU FIND A DEFECTIVE PART

We fully stock all parts and components. Any defective part can be quickly replaced. Take note of the defective part number in manual and we will arrange a quick replacement.

You can email our team at *customercare@laura-james.co.uk*

COPYRIGHT

All material in this instruction manual is copyrighted by AGTC Ltd.

Any unauthorised use may violate worldwide copyright, trademark and other laws.

Thank you for purchasing!

Laura James® is a registered trademark of AGTC Ltd.
Made in China for AGTC LTD S35 9ZX

Version 1