INSTALLATION

Product Manual

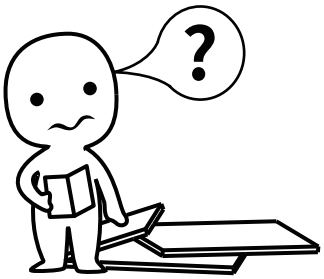

IMPORTANT INFORMATION!

please read the entire manual before starting to assemble and/or using this product.follow the manual thoroughly and keep it for further reference.

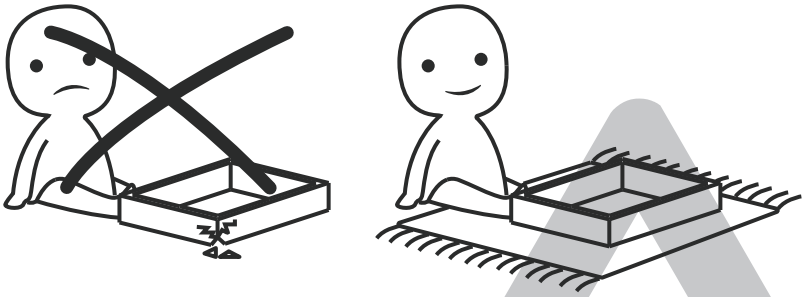

AVOID SCRATCHES!

In order to avoid scratching this furnuture should be assembled on a soft layer-could be a rug.

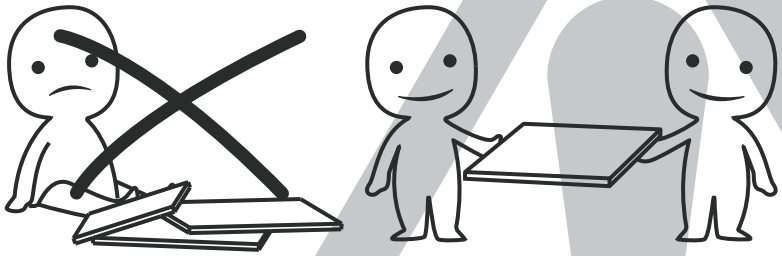

IMPROVE EFFICIENCY !

Try to find a partner to install with you, which can speed up the installation efficiency and shorten the time.

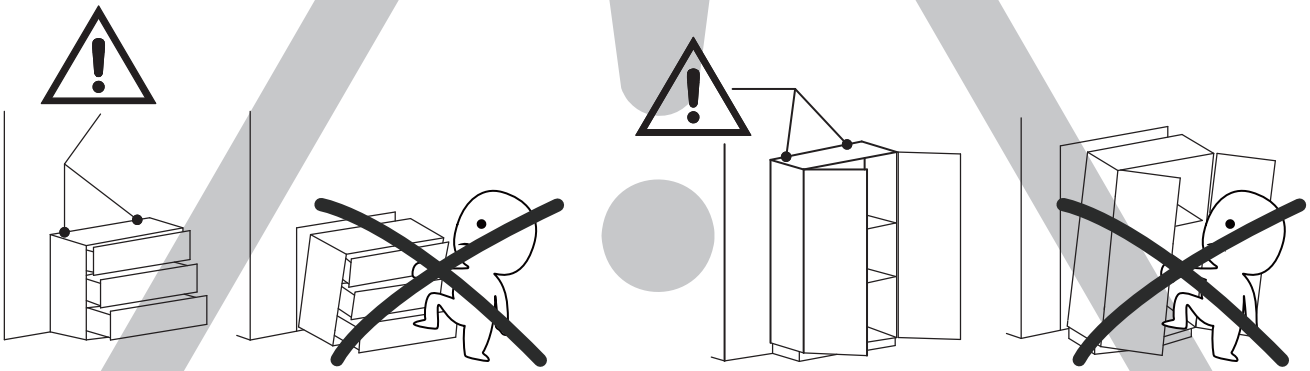

ANTI-TOPPLE WARNING !

Overturned furniture can cause serious or fatal crush injuries. To prevent tipping over, be sure to use the wall attachment, if not included with this product. Please purchase the wall attachment that fit your wall. If unsure, seek professional advice. Please read and follow each step of the instructions carefully.

IMPORTANT !

It is important that any product which is assembled using any kind of screw is re-tightened 2 weeks after assembly,and once every 3 months - in order to assure stability through-out the lifespan of the product.

For regular maintenance and cleaning of the product, for the frame, please use a rag dipped in neutral detergent to fully wipe it, and then dry it with a clean rag.For glass materials, wipe with a rag dampened with water glass cleaner, and then dry with a dry rag.

Do not use an electric screwdriver, and do not use too much force when installing, because the board is easy to break.

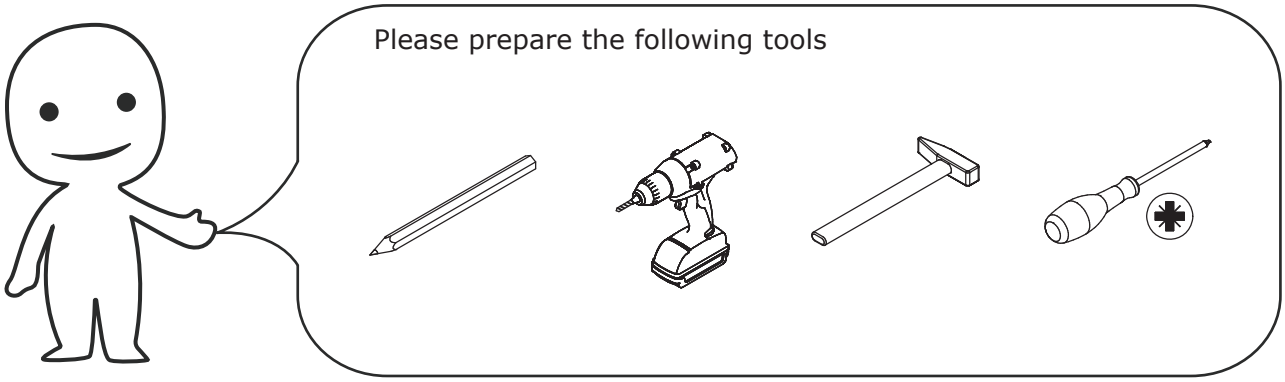

When installing, please carefully confirm whether each screw corresponds to the manual, accessories with similar shapes can be distinguished by size

A x 36	B x 36	C x 24	D x 72	E x 40
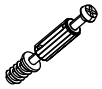		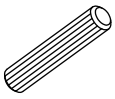		
M5 x 42 mm	∅15 x 12 mm	∅8 x 40 mm	M3.5 x 12 mm	M3.5 x 14 mm

F x 8	G x 8	H x 12	I x 4	J x 6
		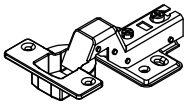	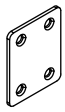	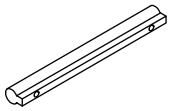
M3.5 x 14 mm	M8 x 40 mm	DW		220-96

K x 12	L x 12	M x 25	N x 25	O x 20
M4 x 18 mm	∅12 x ∅4 x 1.0	∅1.5 x 15 mm	15 x 10	BBK

P x 2	x 1
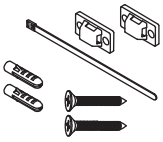	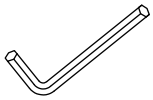
SETS	#5

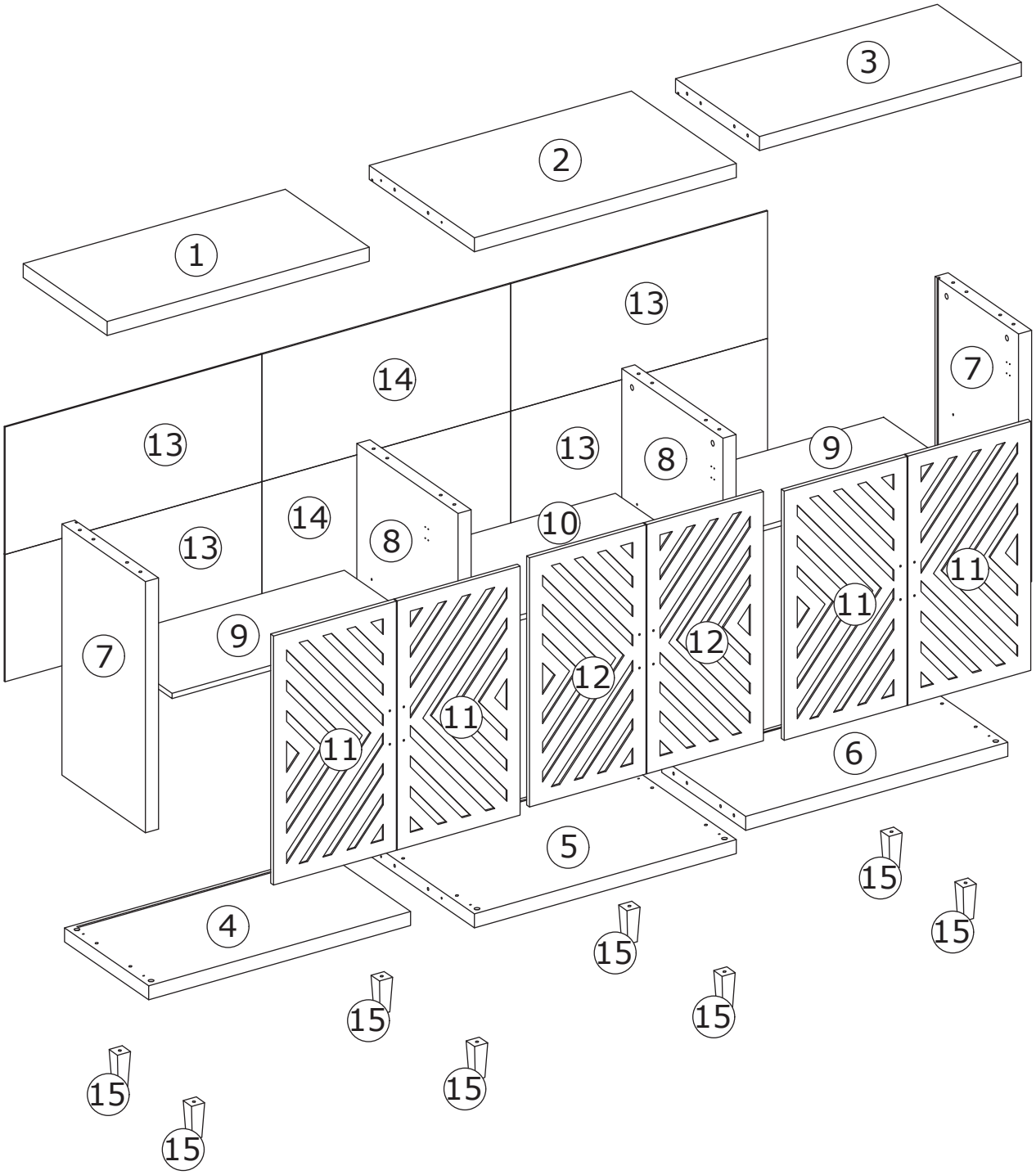

⚠WARNING

Children have died from furniture tipover.To reduce the risk of furniture tipover:

- ALWAYS install Anti-tip device provided.
- NEVER put a TV on this product.
- NEVER allow children to stand,climb or hang on drawers,doors,or shelves.
- NEVER open more than one drawer at a time.
- Place heaviest items in the lowest drawers.

This is a permanent label.
Do not remove!

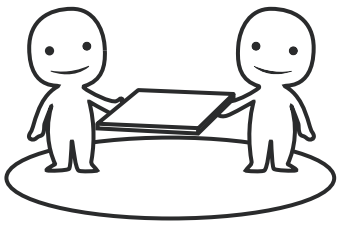

ASSEMBLED BY 2 ADULTS

1

G x 4

M8 x 40 mm

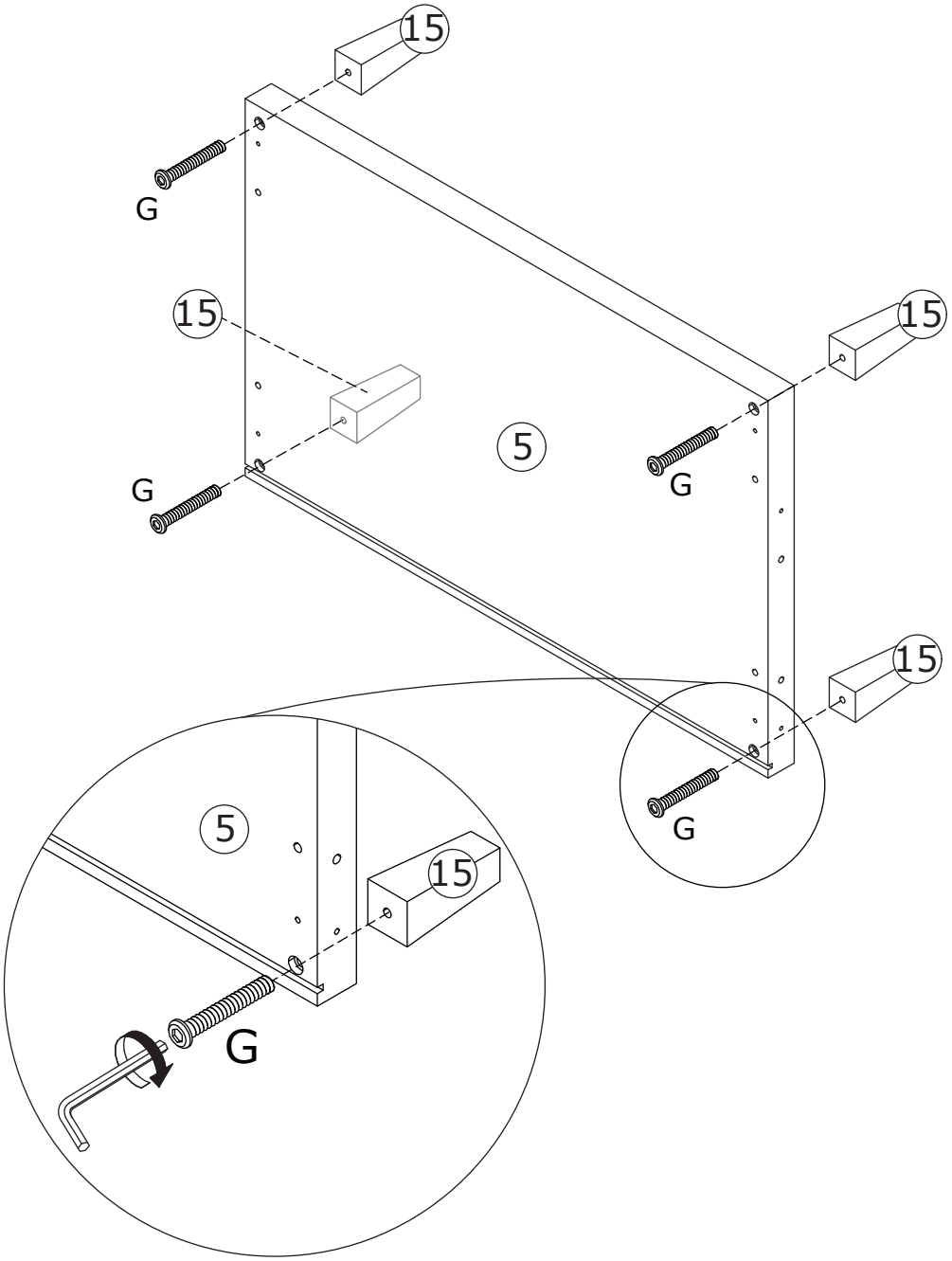

Fix leg part 15 to panel 5 using screw(G) as shown.

2

A x 8

M5 x 42 mm

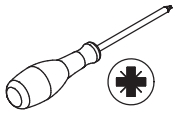

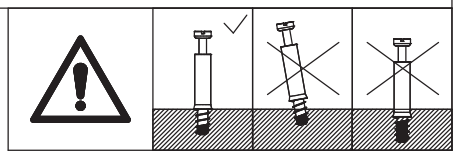

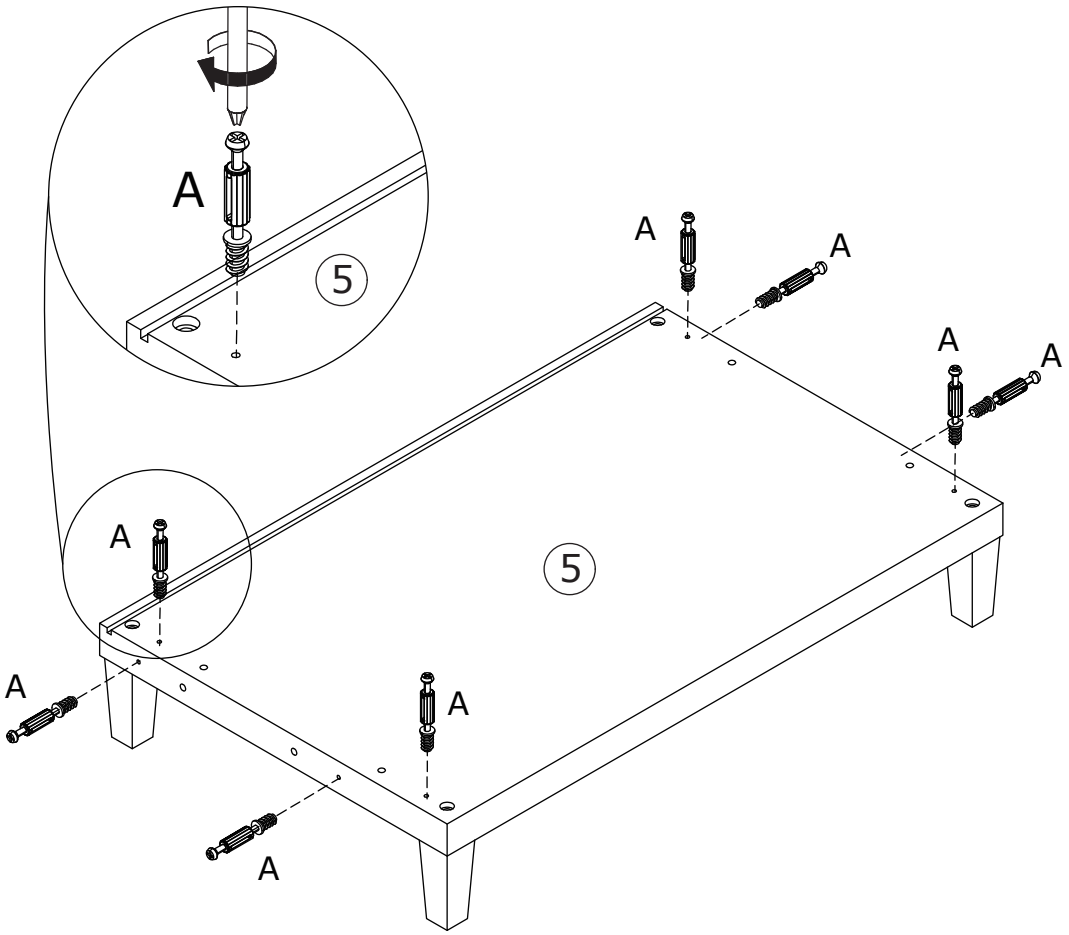

Screw eccentric rod(A) into panel 5 as shown.

3

A x 8	B x 4
M5 x 42 mm	∅15 x 12 mm

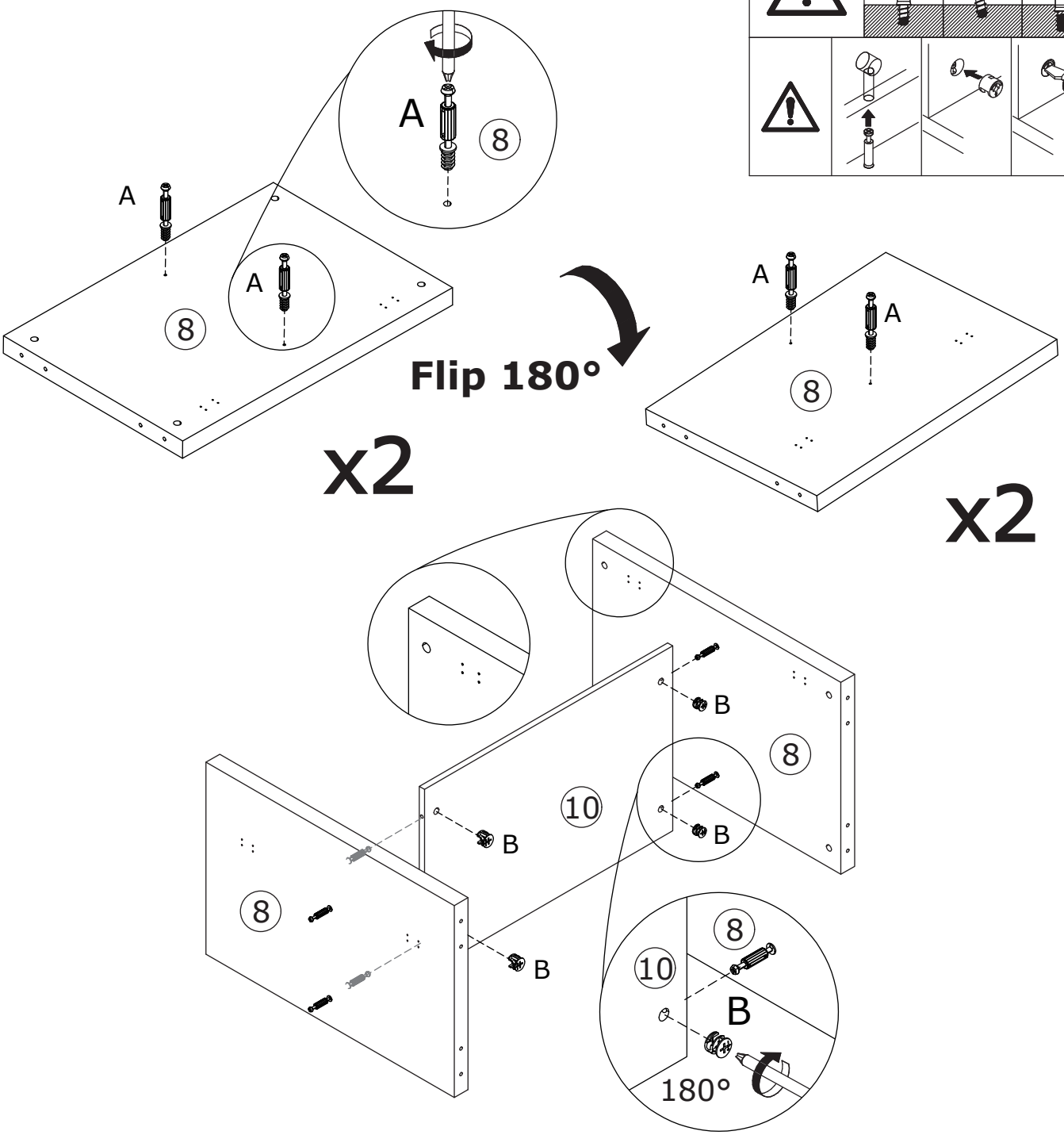

Screw eccentric rod(A) into panel 8 as shown.
Connect panel 8 to panel 10, add cam lock(B) into panel 10 and turn clockwise to tighten as shown.

4

B x 4	C x 4
∅15 x 12 mm	∅8 x 40 mm

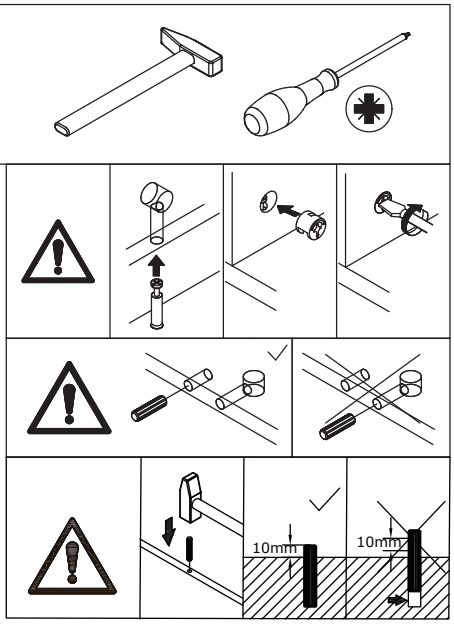

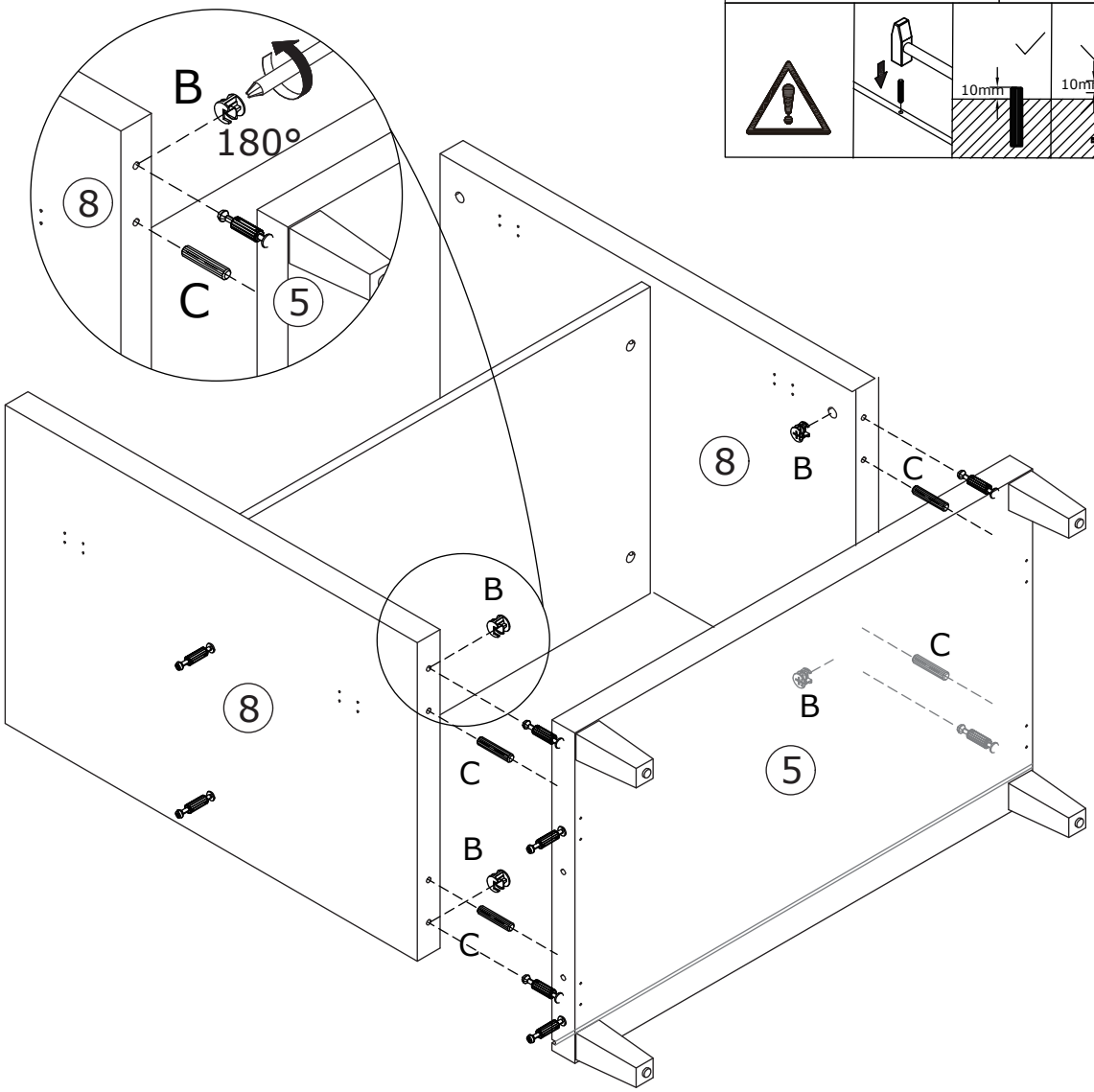

Attach panel 5 to panel 8 using wooden dowel(C), add cam lock(B) into panel 8 and turn clockwise to tighten as shown.

5

A x 4	B x 2	C x 2	G x 2	
M5 x 42 mm	∅15 x 12 mm	∅8 x 40 mm	M8 x 40 mm	

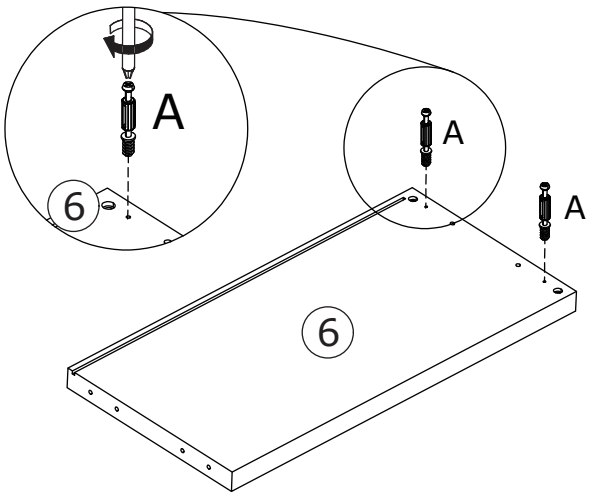

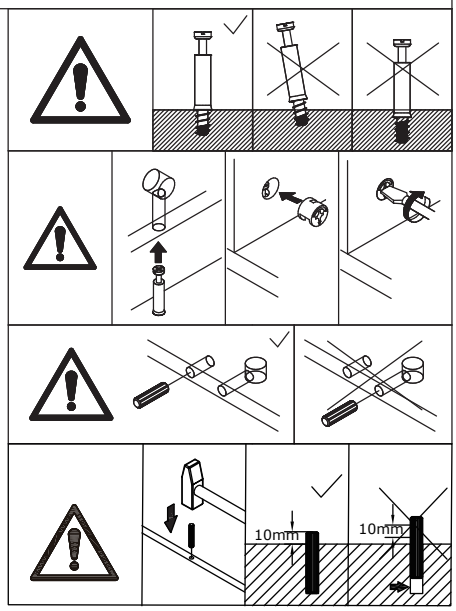

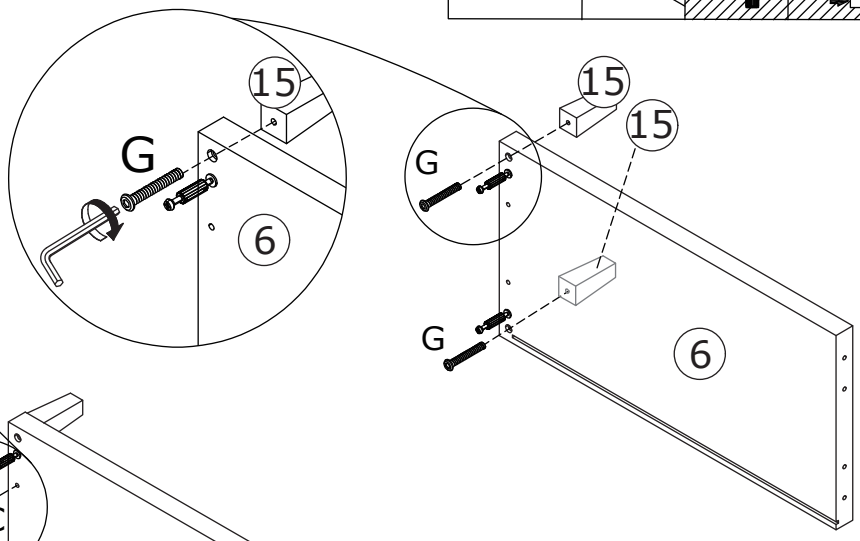

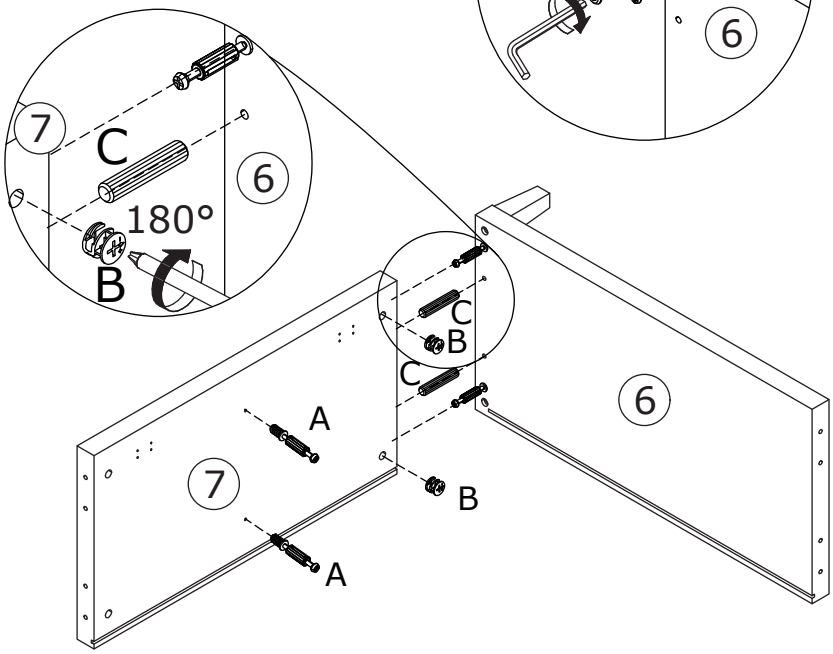

Screw eccentric rod(A) into panel 6 and 7 at first.
Fix leg part 15 to panel 6 using screw(G) as shown.
Attach panel 7 to panel 6 using wooden dowel(C), add cam lock(B) into panel 7 and turn clockwise to tighten as shown.

6

A x 4	B x 2	C x 2	G x 2	
M5 x 42 mm	∅15 x 12 mm	∅8 x 40 mm	M8 x 40 mm	

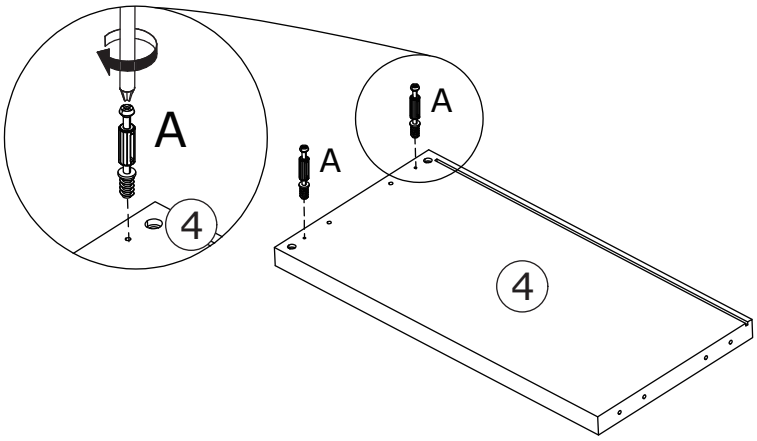

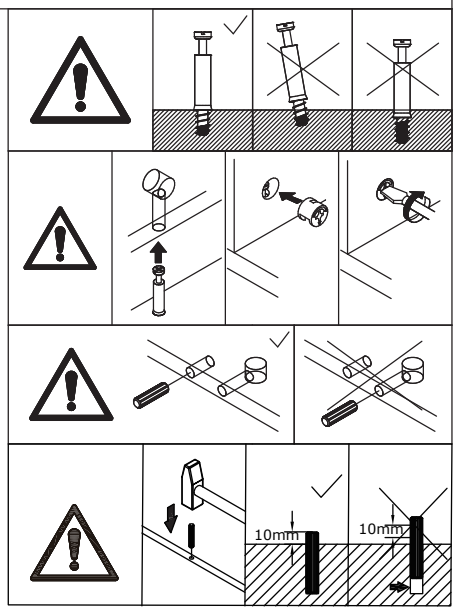

Screw eccentric rod(A) into panel 4 and 7 at first.
Fix leg part 15 to panel 4 using screw(G) as shown.
Attach panel 7 to panel 4 using wooden dowel(C), add cam lock(B) into panel 7 and turn clockwise to tighten as shown.

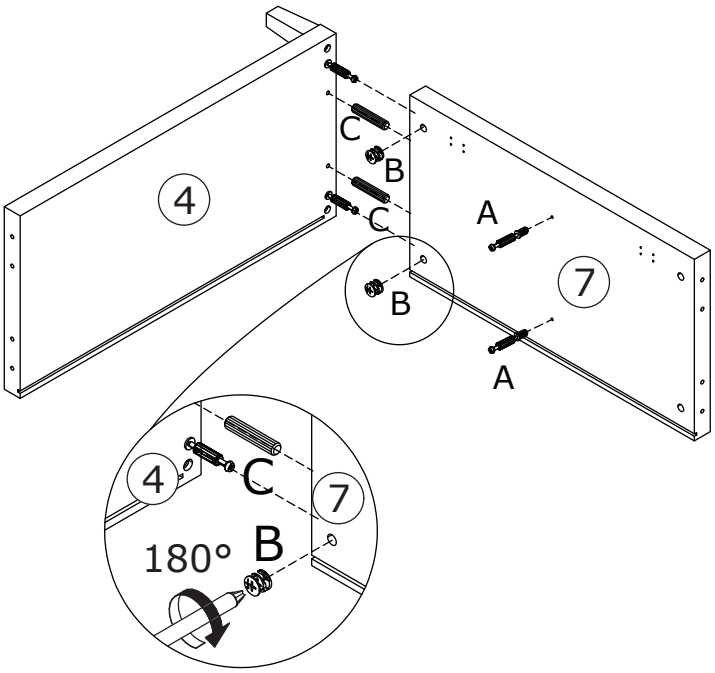

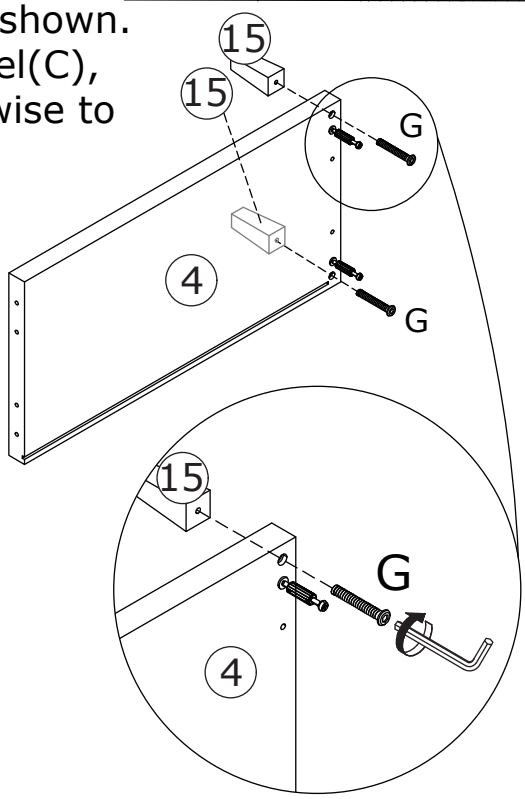

7

B x 12	C x 4
∅15 x 12 mm	∅8 x 40 mm

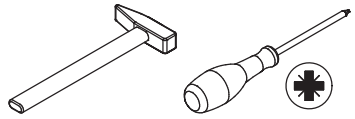

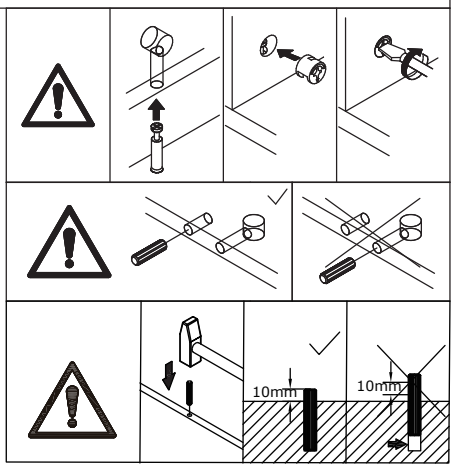

Connect the two components with panel 9 and 8 using wooden dowel(C), add cam lock(B) into panel 9,4,6 and turn clockwise to tighten as shown.

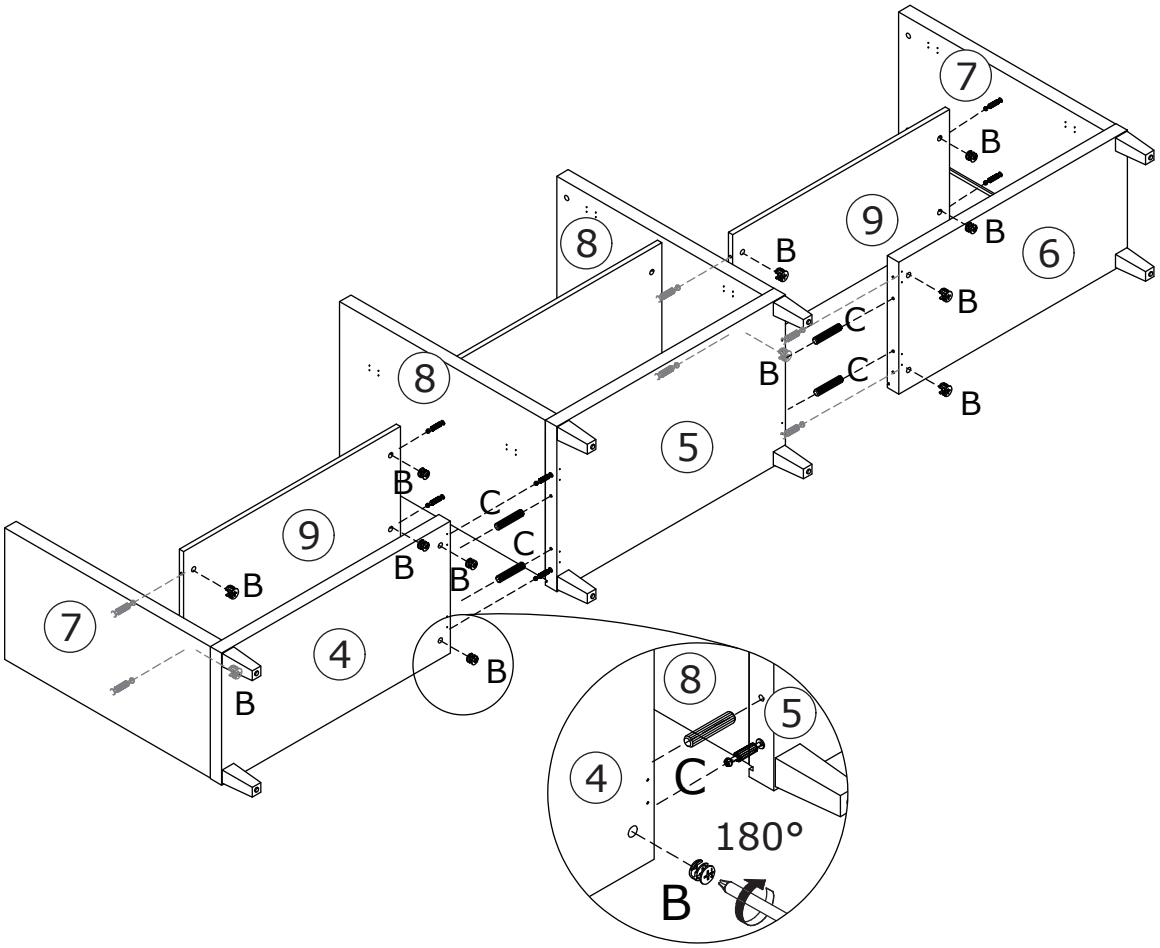

8

E x 16	I x 4	
M3.5 x 14 mm		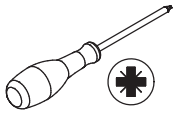

Fix part(I) to panel 4, 5 and 6 with screw(E) as shown.

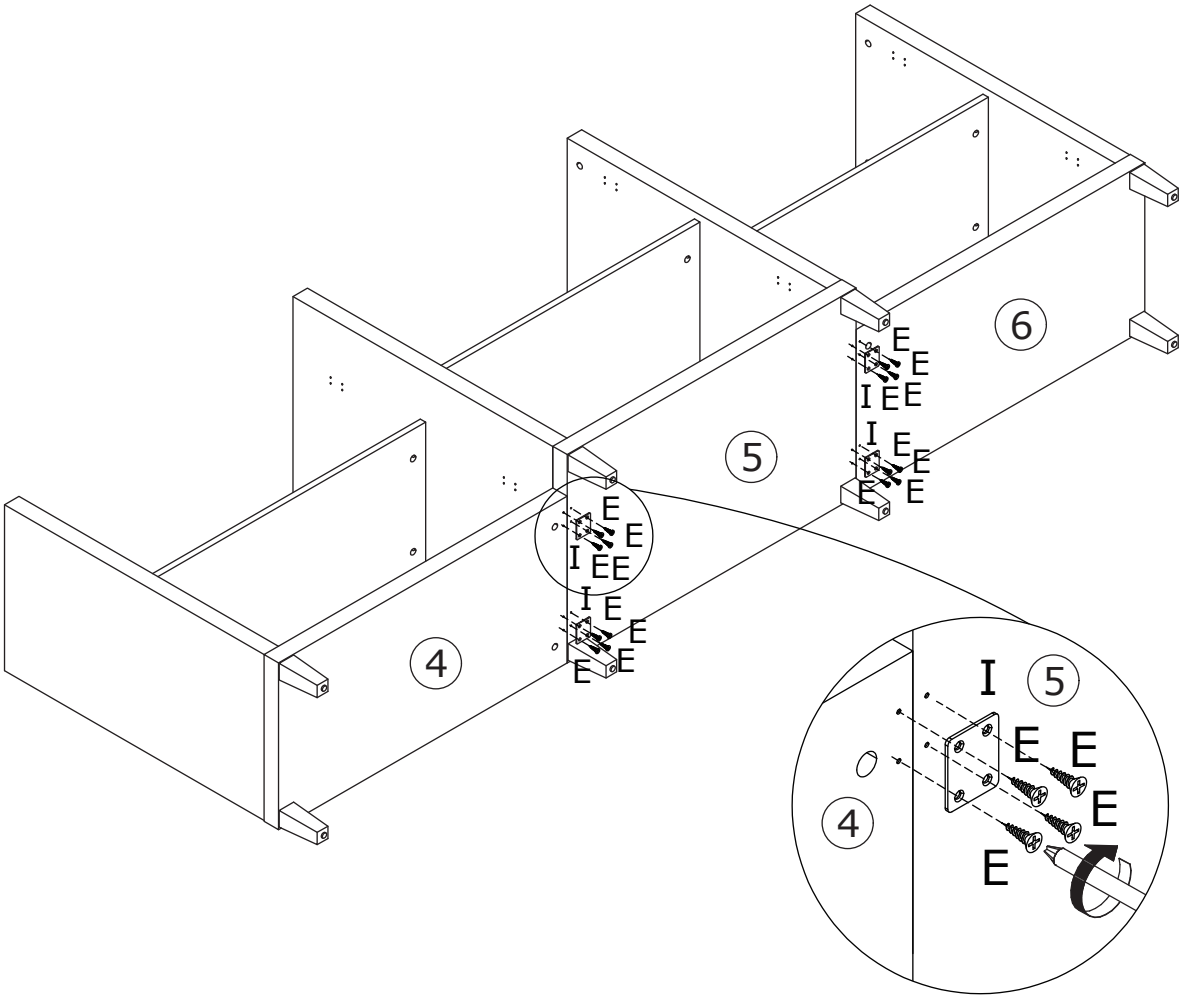

9

C x 8	F x 8
∅8 x 40 mm	M3.5 x 14 mm

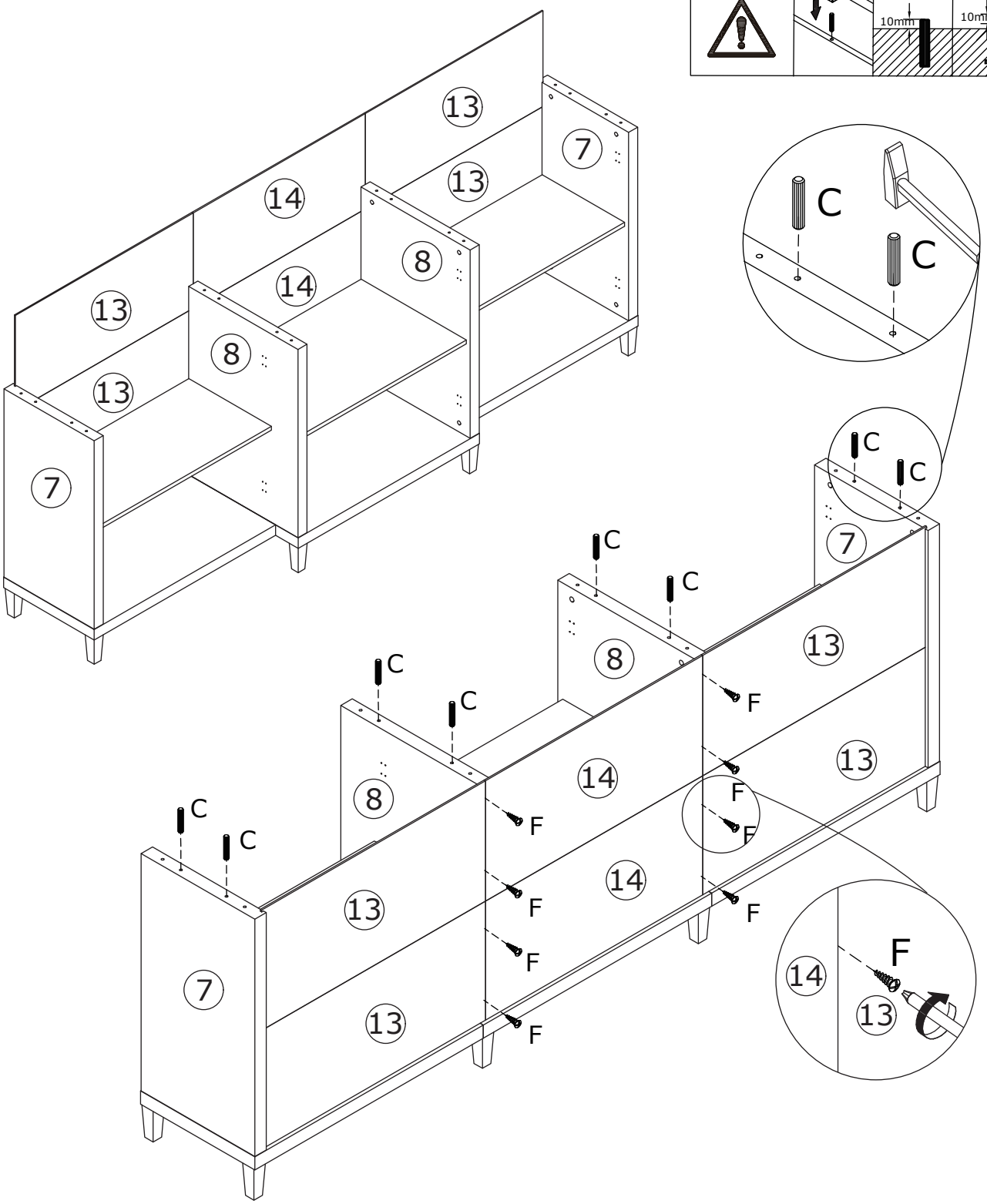

Insert back panel 13 and 14 along available grooves at first.
Fix back panels to the item using screw(F) and knock wooden dowel(C) into panel 7 and 8 as shown.

10

A x 12	C x 4
M5 x 42 mm	∅8 x 40 mm

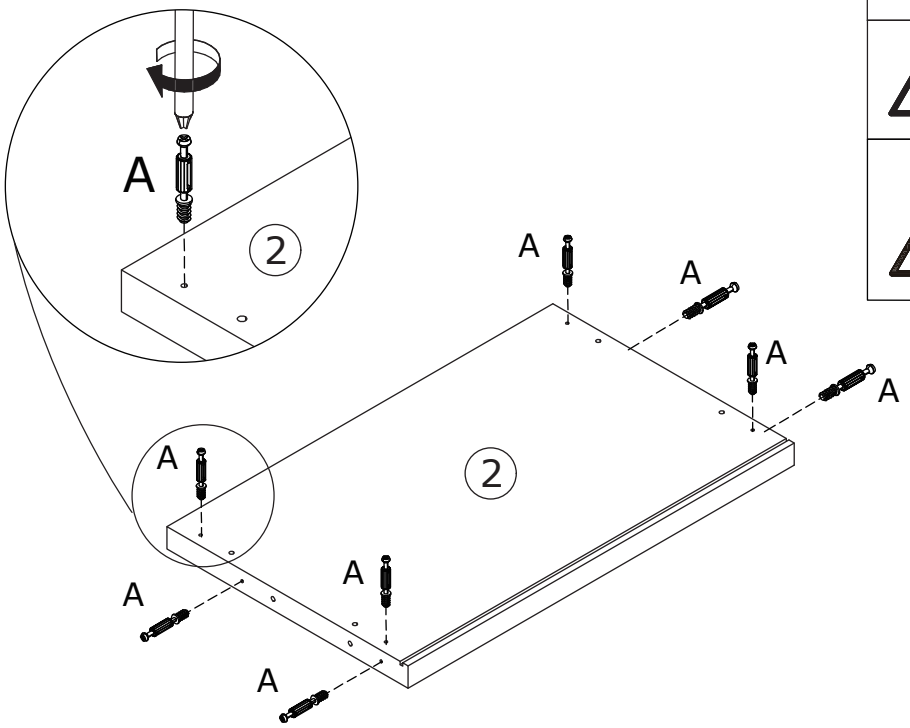

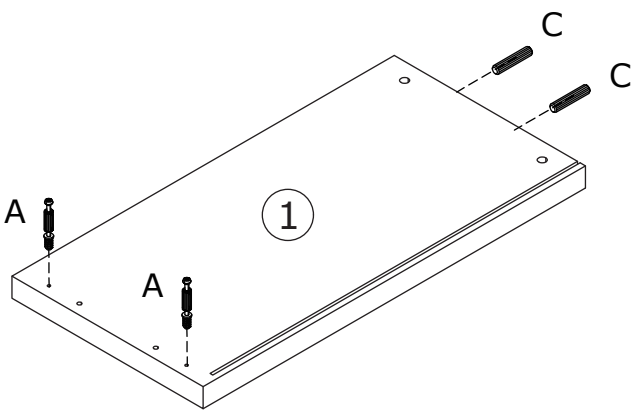

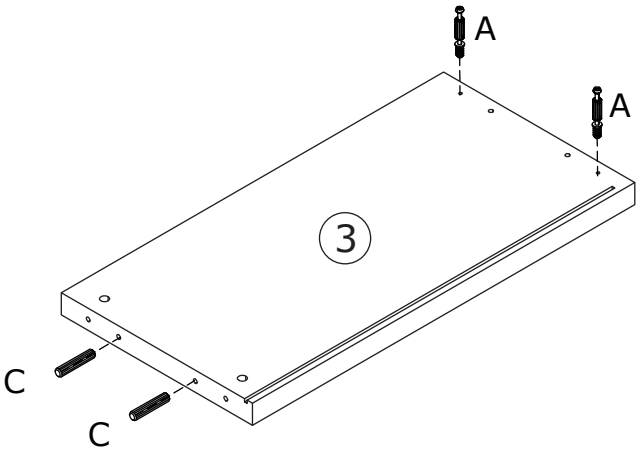

Screw eccentric rod(A) into panel 1, 2 and 3 as shown.
Knock wooden dowel(C) into panel 1 and 3 as shown.

11

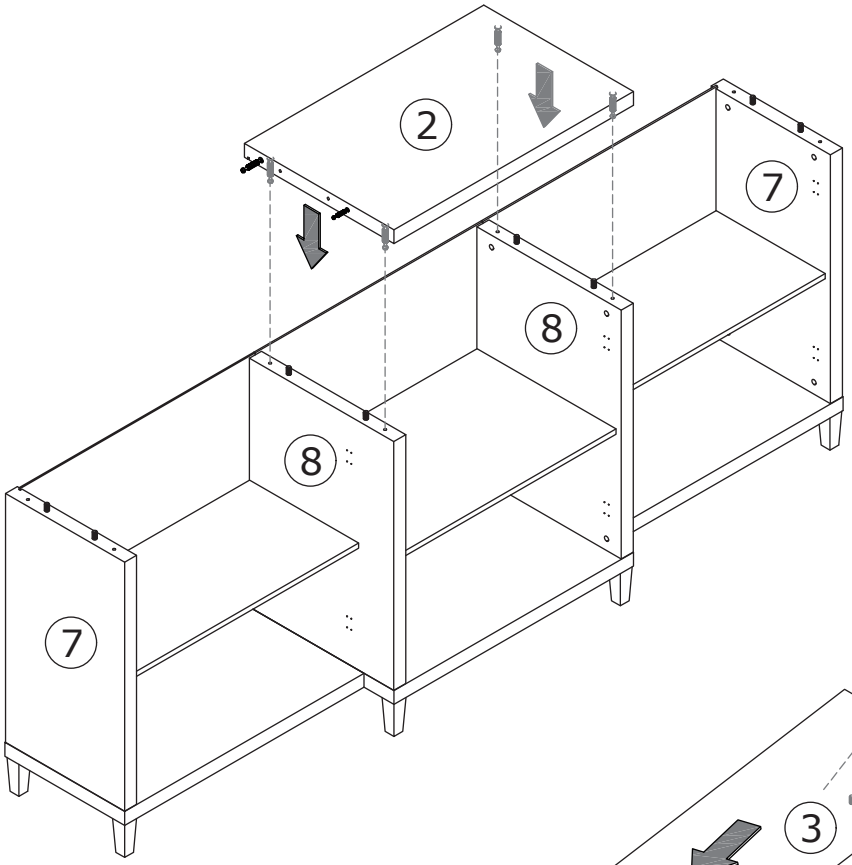

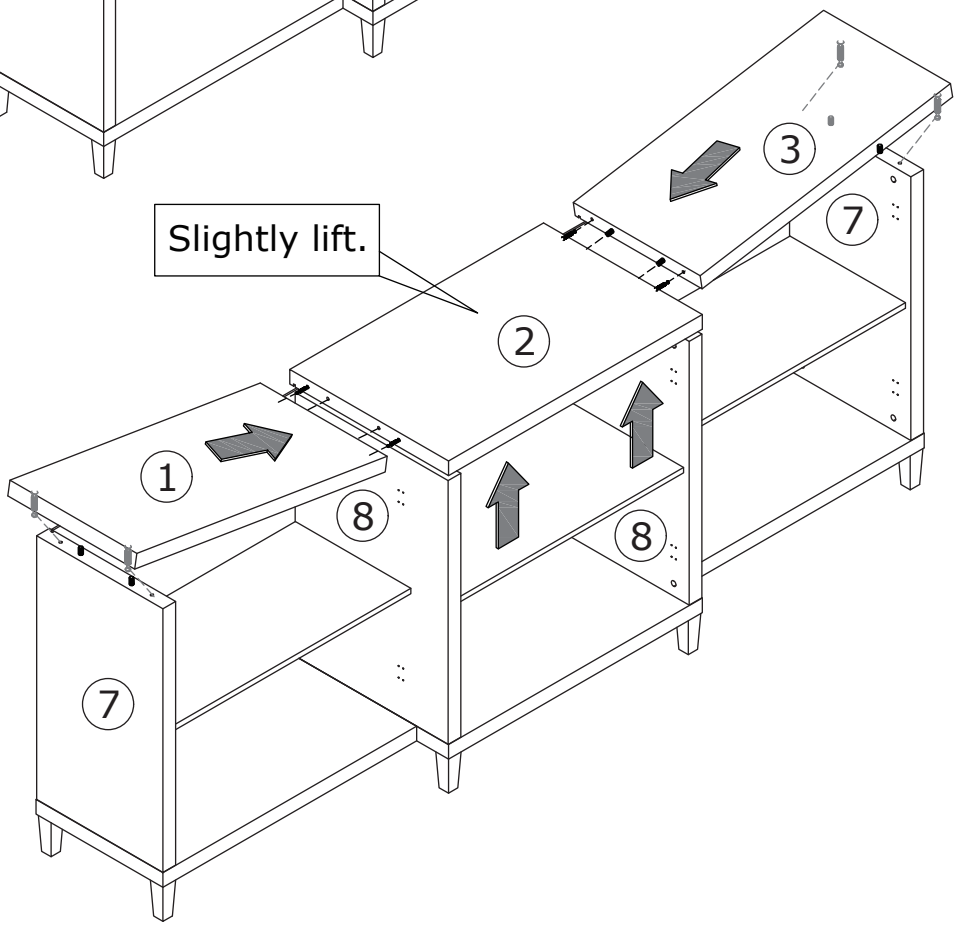

Attach panel 2 to panel 8 at first.
Connect panel 1 and 3 to panel 2, then attach to panel 7 as shown.

12

B x 12

∅15 x 12 mm

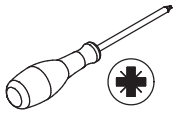

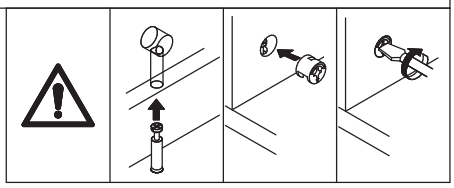

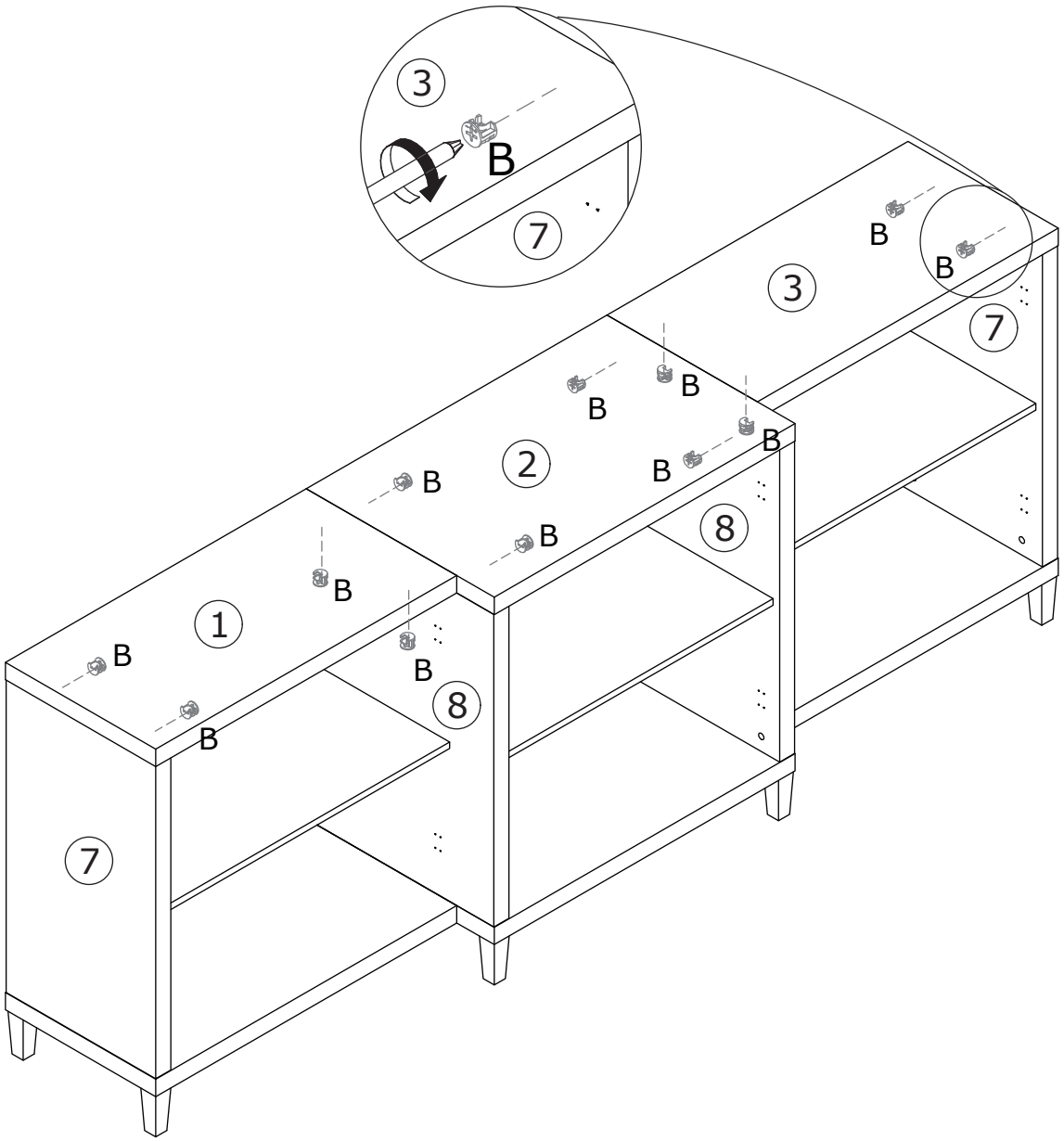

Make sure positions 1, 2, and 3 are correct before locking B.
Add cam lock(B) into panel 7, 1, 8 and 3, and turn clockwise to tighten as shown.

13

E x 20	M x 20	N x 20	O x 20	
M3.5 x 14 mm	∅1.5 x 15 mm	15 x 10	BBK	

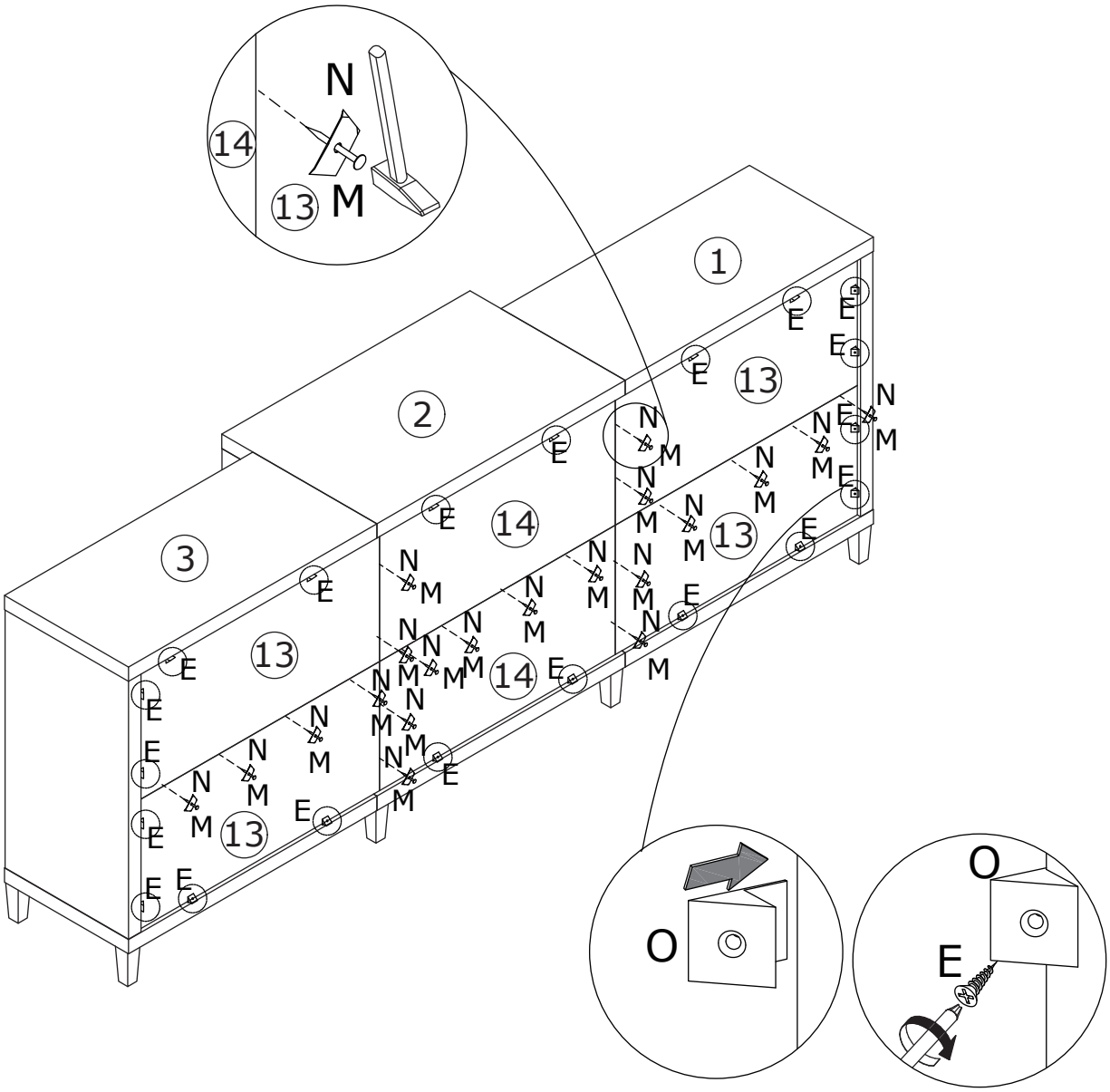

Insert buckle(O) into back slots and fix with screw(E) as shown.
Fix iron sheet part(N) to the gaps using nail(M) as shown.

14

D x 48	H x 8	J x 4	K x 8	L x 8	
M3.5 x 12 mm	DW	220-96	M4 x 18 mm	∅12 x ∅4 x 1.0	

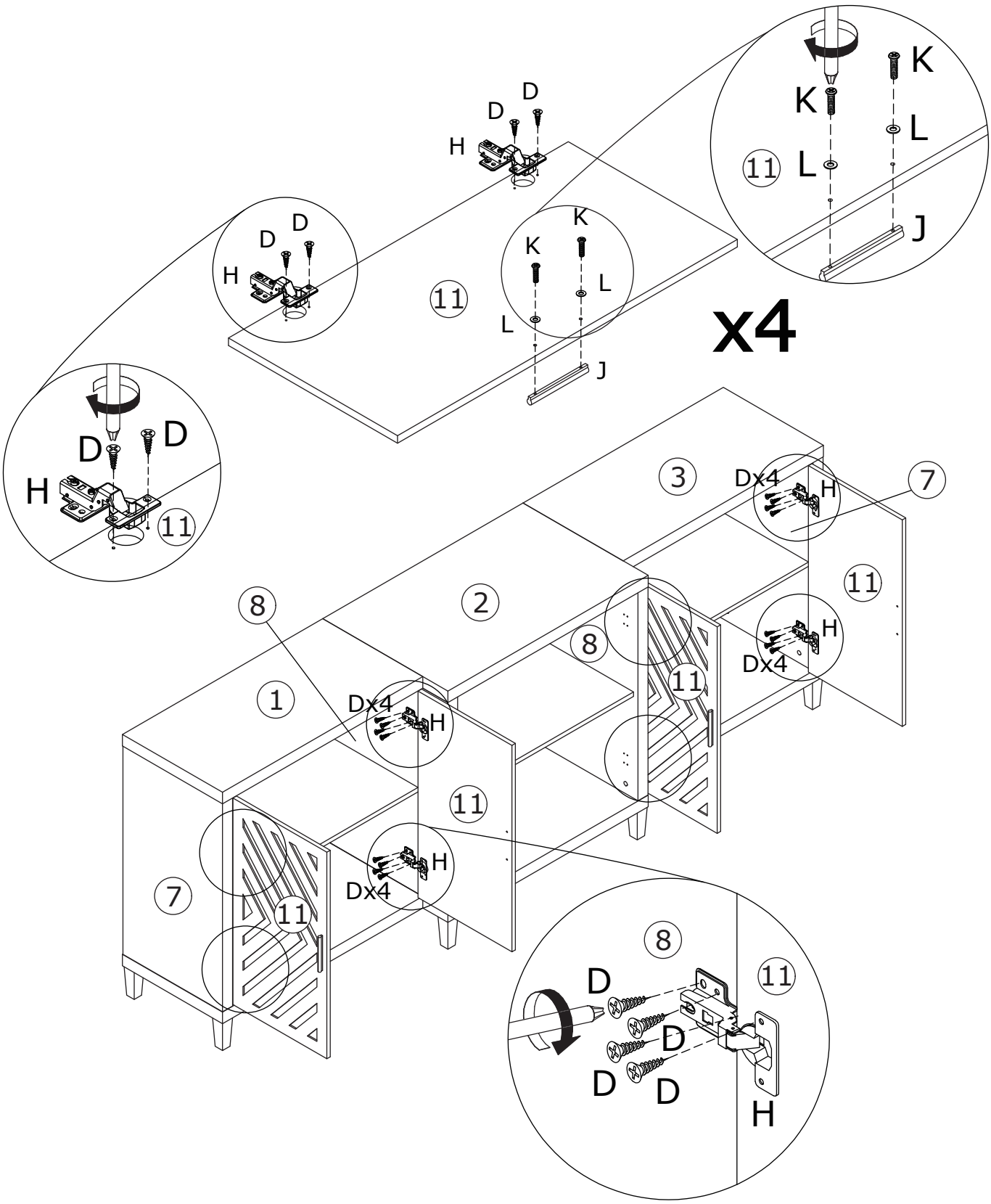

Fix hinge(H) to panel 11 with screw(D), fix handle(J) with washer(L) and screw(K) as shown.
Attach door panel 11 to panel 7 and 8 by fixing hinge with screw(D) as shown.

15

D x 24	H x 4	J x 2	K x 4	L x 4	
M3.5 x 12 mm	DW	220-96	M4 x 18 mm	∅12 x ∅4 x 1.0	

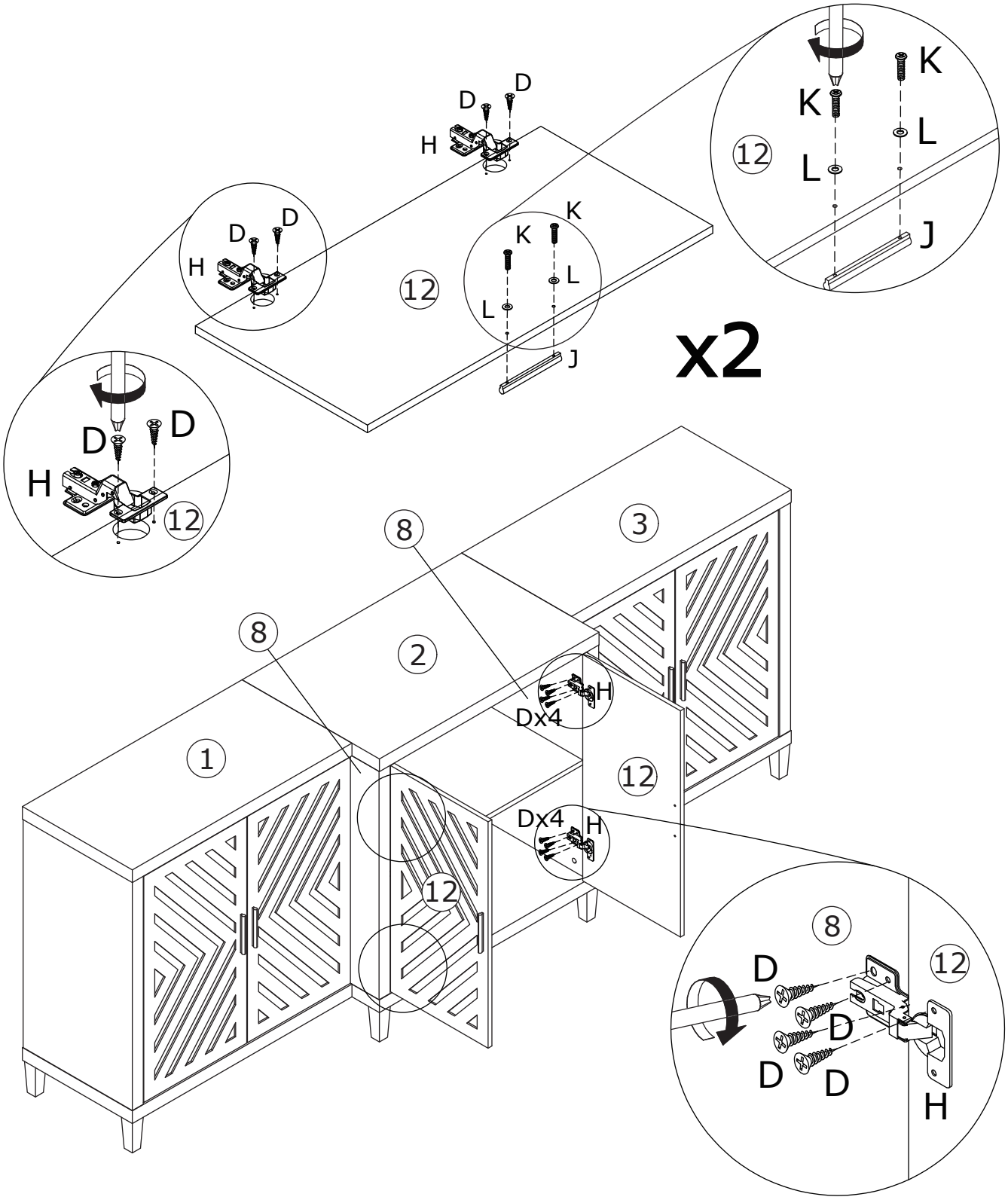

Fix hinge(H) to panel 12 with screw(D), fix handle(J) with washer(L) and screw(K) as shown.
Attach door panel 12 to panel 8 by fixing hinge with screw(D) as shown.

16

E x 4	P x 2	
M3.5 x 14 mm	SETS	

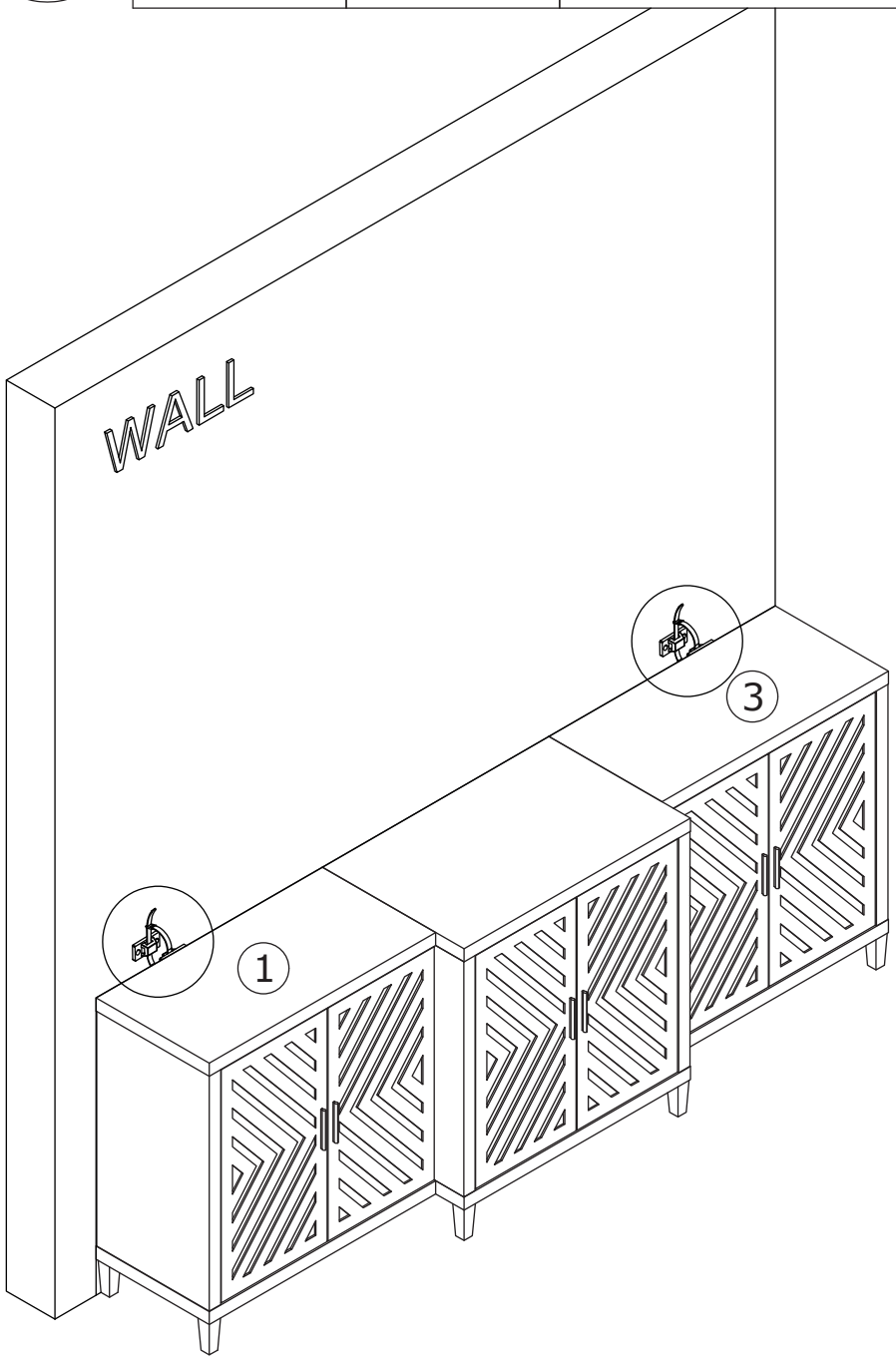

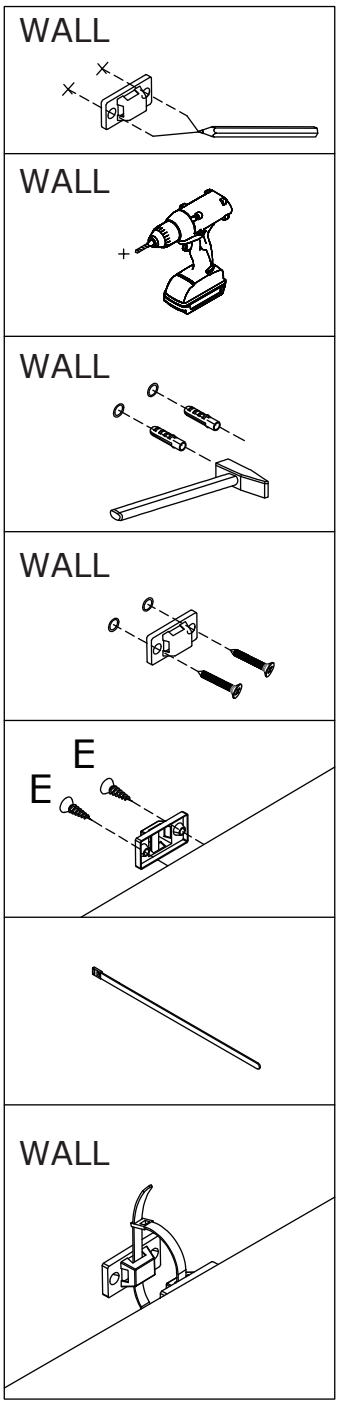

Install anti-tipping device as shown.

17

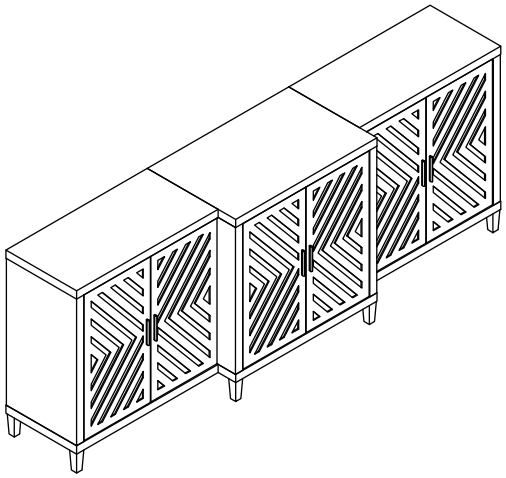

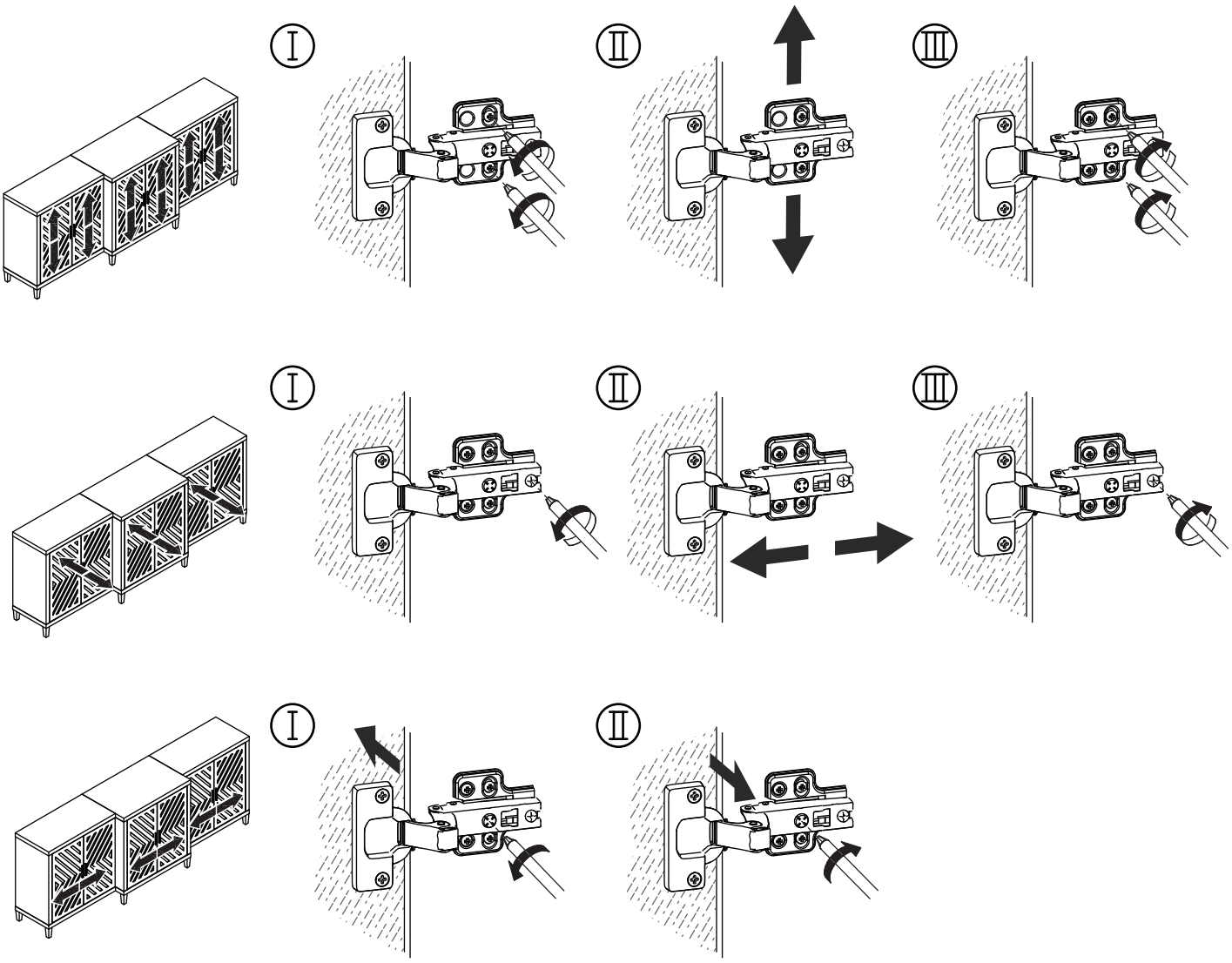

WARRANTY

WARRANTY CLAIMS

•There is a 30-day warranty for broken furniture or any other problems that do not work properly. The warranty will start from the date of purchase which must be verified by proof of purchase.

•Before making a claim, we may be able to answer your query, simply call us. Please leave your purchase order number, along with some details of the problem, if you want a replacement part. We will arrange within 48 hours. If there is out of stock, we will reply with a shipping date.

•The product must be used in accordance with the instructions provided. For health reasons.

•For other reasons, if the furniture needs to be returned, it must be cleaned and dried and operated within 30 days of receipt.

Type of Warranty Claim

•Failure to follow the furniture instructions will invalidate the warranty. Attention please.

•Does not include damage during installation, but includes damage during transportation.

Scope of responsibility

•Shall not bear any responsibility for misuse or user damage and / or loss of parts during the installation of furniture.

•After using, the damage and scratches of the furniture are not covered by the warranty.

The Warranty Relates to All Bought in The Us and Covers The Following Areas

•Sheet parts: 1 month from the date of purchase.

•Electrical parts: 1 month from the date of purchase.

RETURNS

CHANGED YOUR MIND AND NEED TO RETURN YOU ITEM?

PLEASE FOLLOW THE BELOW INSTRUCTIONS:

- If you have purchased and have simply changed your mind, follow the retailer's instructions for returns.

DEFECTIVE ITEMS

- If your item is defective in any way, i.e. it doesn't work but you can't identify why, in the first instance, please call us.

DAMAGED ITEMS

- If you receive an order with obvious shipping damage from the retailer, then we suggest the delivery is refused. If the delivery has been accepted and then shipping damage is found, please follow the specific instructions advised by the retailer.
  In all circumstances please save all packaging material and paperwork for the order. Please be aware that if you dispose of packaging material or attempt to return the merchandise without contacting the fulfiller, you jeopardise your chances of making a claim, and you may not receive a credit for the return.