Sofa

Assembly Instruction – Please keep properly for future reference.

If you find any missing boxes, damaged parts, or accessory shortages, please contact the customer service team of your purchasing channel immediately. We will resolve the issue as quickly as possible.

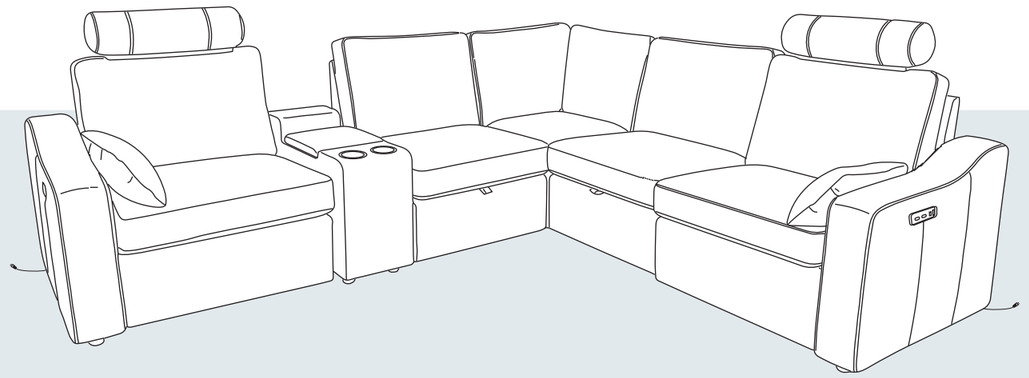

BoxA x1
BoxB x1
BoxC x2
BoxD x1
BoxE x1
BoxF x1

C003374021
C003374022
C003374023
C003374024
C003374025
C003374026
C003374011
C003374012
C003374013
C003374014
C003374015
C003374016

EN

CONTACT US

- **Email: service@grandtunnel.com**
  In order to receive assistance more quickly, please provide

THE FOLLOWING INFORMATION:

- Order number
- Purchase platform
- Purchase date
- Detailed description of the issue along with photos (if applicable)

Important – Please read these instructions carefully before starting the installation.

Sofa

Before Assembly

Thank you for choosing our product!
To ensure a smooth installation process, please read this guide carefully to familiarize yourself with the required tools, materials, and installation steps.
Follow the relevant sections to avoid any damage caused by improper installation, and make sure to review all operation and safety guidelines for correct installation procedures.

Packaging Notice:

1. Multi-Box Shipping Notice

This product is packaged in multiple boxes for shipping and may arrive in batches at different times. To ensure a smooth assembly process, please make sure all boxes are received before unpacking and starting the assembly.

2. Box and Packaging Verification

Each box is labeled with a corresponding number. Please refer to the packing list on the next page of this manual to verify that all boxes have been received.

If you find any missing boxes, damaged parts, or accessory shortages, please contact the customer service team of your purchasing channel immediately. We will resolve the issue as quickly as possible.

Installation Information

- All information in this guide is based on the product's condition at the time of printing. We reserve the right to modify product features, packaging, or availability without prior notice.
- Before installing the furniture, ensure that all necessary electrical or environmental preparations are completed.
- This manual contains important instructions on installation, cleaning, and maintenance. Please read it thoroughly and keep it for future reference.

Pre-Installation Checklist

1. Carefully inspect the new product for any damage or defects.
2. Ensure installation is carried out on a clean, flat surface to maintain balance and stability.

Email : **service@grandtunnel.com**

EN

3. Avoid prolonged exposure of the product to damp environments or direct sunlight.
4. Handle with care during installation. Use protective materials (e.g., soft pads) to prevent scratches.
5. For any questions or technical support, refer to the customer service guide and contact the seller's customer service.

Usage and Maintenance Recommendations

1. Clean furniture regularly to maintain hygiene and prevent bacteria growth. Use a damp cloth that has been wrung out to avoid scratching the finish.
2. Avoid contact with acidic or alkaline corrosive liquids.
3. Do not use unauthorized replacement parts. For replacement parts, contact the manufacturer or distributor.
4. Do not machine wash or rinse any part of this product with water.

Safety Warnings

1. Warning Labels:

Do not remove warning labels on the product or packaging, and always follow the related instructions.

2. Regular Inspections:

Regularly check all parts of the product to ensure they are correctly installed, undamaged, and all connectors are securely tightened.

3. Safe Use:

Do not play on or under the sofa, and strictly avoid jumping or any actions that may harm the sofa or users.

4. Rope Hazard:

Do not attach ropes, hooks, straps, or other unintended items to any part of the product.

5. Guide Preservation:

Retain this manual for future reference.

Email : **service@grandtunnel.com**

6. Supervisory Responsibility:

Safety is a shared responsibility between the manufacturer and the user. Always adhere to safety guidelines when using the product.

Disclaimer

We are committed to providing safe and reliable products. If you have any questions about this product or require additional support, please contact our customer service team. We are here to assist you.

Safety Instructions / Warnings

Please read and follow all instructions carefully before installation and use.

WARNING:
Risk of electric shock – Do not open or disassemble electrical parts.

- **Use only the power cord specifically provided for this product.**
  Adaptor Input: 100-240V~, 50/60Hz, 2.0A. Output: DC 29V 2.0A, 58W.
  USB /type-C Output: DC 5V 2A.
- Do not use with damaged power cords or plugs.
- Keep power cables away from moving or sharp parts of the furniture.
- Do not use extension cords or power strips unless specifically approved for the load.
- This product is **not a toy**. Do not allow children to play with electrical components or moving parts.
- Children under 8 years old must be kept away from the furniture unless continuously supervised.
- Keep remote controls, control switches, and ports out of children's reach.
- Always **disconnect the product from power** before cleaning, maintenance, or relocation.
- Do not attempt to open, modify, or repair electrical components.
- **Repairs must be performed by qualified professionals only.**
- Do not insert any foreign objects into openings or mechanisms.
- Clean with a dry cloth or a slightly damp soft cloth. Do not use solvents.
- This product is intended **for indoor** use only in dry environments.
- Do not expose the furniture to moisture, liquids, or direct sunlight.
- * Ensure stability and clearance around any moving parts (e.g., lift mechanisms, recliners).
- Do not overload power outlets or USB ports beyond the specified ratings.
- **Always unplug the product when it is not in use.**

FCC Information:

EN

CAUTION: Changes or modifications not expressly approved by the party responsible for compliance could void the user's authority to operate the equipment!

This device complies with Part 15 of the FCC Rules. Operation is subject to the following two conditions:

1) This product may cause harmful interference.

2)This product must accept any interference received, including interference that may cause undesired operation.

WARNING: Changes or modifications to this product not expressly approved by the party. responsible for compliance could void the user's authority to operate the product.

Note: This product has been tested and found to comply with the limits for a Class B digital device pursuant to Part 15 of the FCC Rules, These limits are designed to provide reasonable protection against harmful interference in a residential installation.

This product generates, uses and can radiate radio frequency energy, and if not installed and used in accordance with the instructions, may cause harmful interference to radio communications. However, there is no guarantee that interference will not occur in a particular installation. If this product does cause harmful interference to radio or television reception, which can be determined by turning the product off and on, the user is encouraged to try to correct the interference by one or more of the following measures.

- Reorient or relocate the receiving antenna.
- Increase the distance between the product and receiver.
- Connect the product to an outlet on a circuit different from that to which the receiver is connected.
- Consult the dealer or an experienced radio/TV technician for assistance.

Customer Service Guide

Thank you for choosing our product! We are committed to providing you with excellent service. If you find any missing parts, damaged packaging, or product damage after receiving all packages, please follow the steps below to quickly contact our customer service team. We will do our best to resolve your issue.

1. Missing Parts

Verify Parts:

1. Refer to the “Parts List” in the manual to verify the name, specifications, and quantity of the missing parts.
2. Take a clear photo of the parts list and mark the missing parts with detailed information, e.g., “Missing 5 pieces of M6×30mm screws.”

Contact Us:

By Email:

Send an email to **service@grandtunnel.com**, with the subject line “Missing Parts Issue.” Include the following in the email:

- A description of the missing parts and a photo of the parts list.
- Order details (order number, purchase platform, purchase date).

2. Product or Packaging Damage

If it affects normal use:

Steps:

1. Take clear photos or videos showing the damaged parts and the extent of the damage (multi-angle shots are recommended).
2. Email the photos/videos along with order details to **service@grandtunnel.com**, with the subject line “Product Damage Issue.”

Resolution:

After verification, we will arrange for a replacement part, product exchange, or refund as quickly as possible.

EN

If it does not affect normal use:

Steps:

1. Contact our customer service team (by email: **service@grandtunnel.com**).
2. Provide a description of the damage and include relevant photos or videos.

Resolution:

We will provide repair guidance or an appropriate compensation plan based on the specific situation.

Contact Us:

Customer Service Email: **service@grandtunnel.com**

Helpful Tips

To process your issue efficiently, please prepare the following information:

- Order details (order number, purchase platform, purchase date).
- Clear photos or videos.
- We are committed to providing quick and professional solutions, no matter the size of the issue, to ensure your satisfaction.

Thank you for your trust and support!
We hope you enjoy using our product!

EN

Parts List

Box A

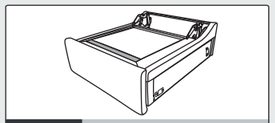

B1-L x1

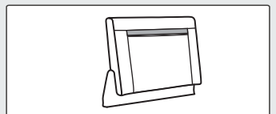

B2 x1

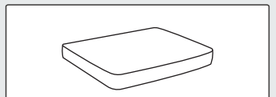

B3-1 x1



B4-1 x1

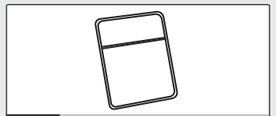

B5 x1

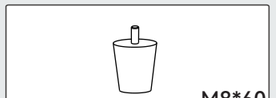

M8*60

B6 x4



B4-2 x1



B3-2 x1



M6*20

1 x6



5#

2 x1

Box B

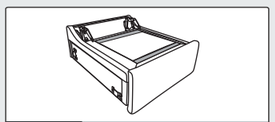

B1-R x1

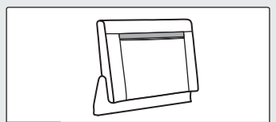

B2 x1

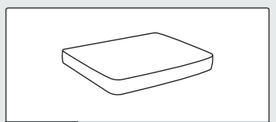

B3-1 x1



B4-1 x1



B5 x1

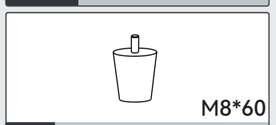

M8*60

B6 x4



B4-2 x1



B3-2 x1

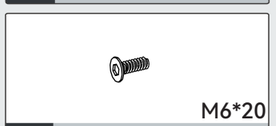

M6*20

1 x6

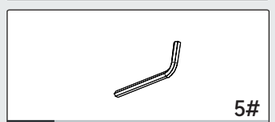

5#

2 x1

Email : **service@grandtunnel.com**

Box C

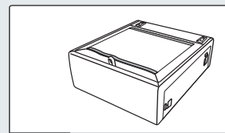

C1 x1

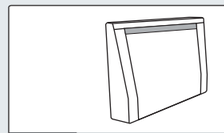

C2 x1

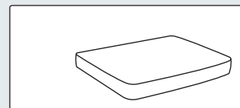

B3-1 x1



B4-1 x1

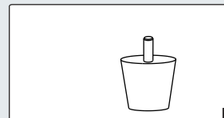

M8*40

A3 x4



B4-3 x1



B3-2

Box D

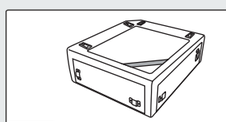

D1 x1

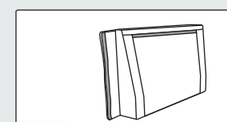

D2 x1

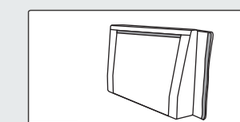

D3 x1

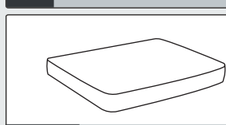

D4-1 x1



D5-1 x1



D6-1 x1

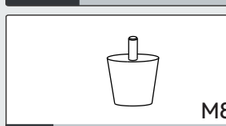

M8*40

A3 x4



D4-2 x1



D5-2 x1

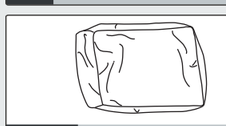

D6-2 x1

Email : **service@grandtunnel.com**

EN

Box E

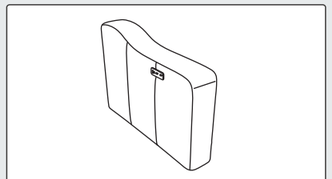

A-L x1

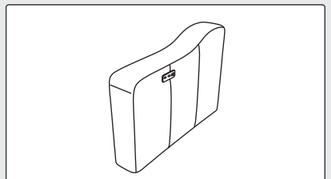

A-R x1



M8*40

A3 x4



A4 x2

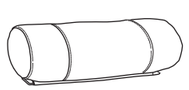

A5 x2

Box F

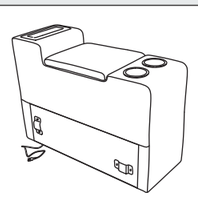

E1 x1



M8*40

A3 x4

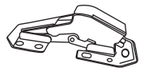

E2 x1

Email : **service@grandtunnel.com**

Assembly Instructions

Important : Please read these instructions fully before starting assembly.

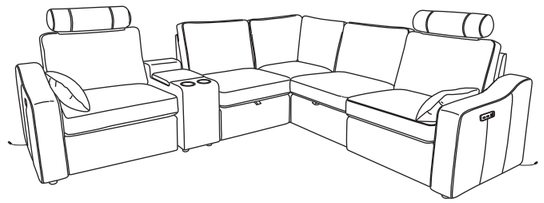

Note :

Shipped in multiple packages, each with its own tracking number. Shipments may NOT arrive at the same time. Before starting assembly, determine where to place the sofa and your desired orientation.



2 people needed



Work gloves



Tape measure



Other Tools Required
Phillips Screwdriver
(Not Included)

Simple Assembly Steps

1. Read the manual carefully.
2. Check all parts and hardware.
3. Prepare necessary tools.
4. Have at least two adults for assembly.

Please follow the instructions and use a sanitary napkin to protect the product during your assembly process.

Note:

1. The assembly should be done on a flat surface to maintain balance.

2. Do not tighten the screws before the assembly is complete.
To make the assembly process easier and better, two or more adults are needed.

Email : **service@grandtunnel.com**

EN

Exploded View

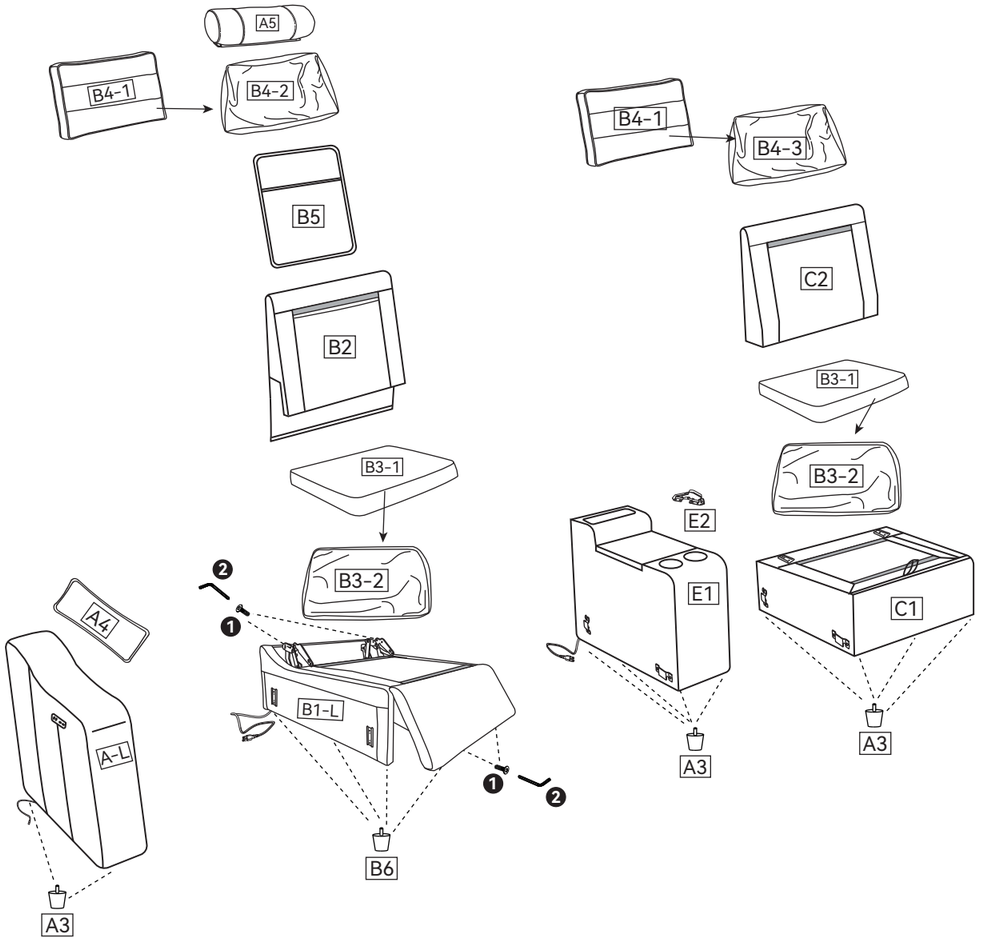

Exploded View

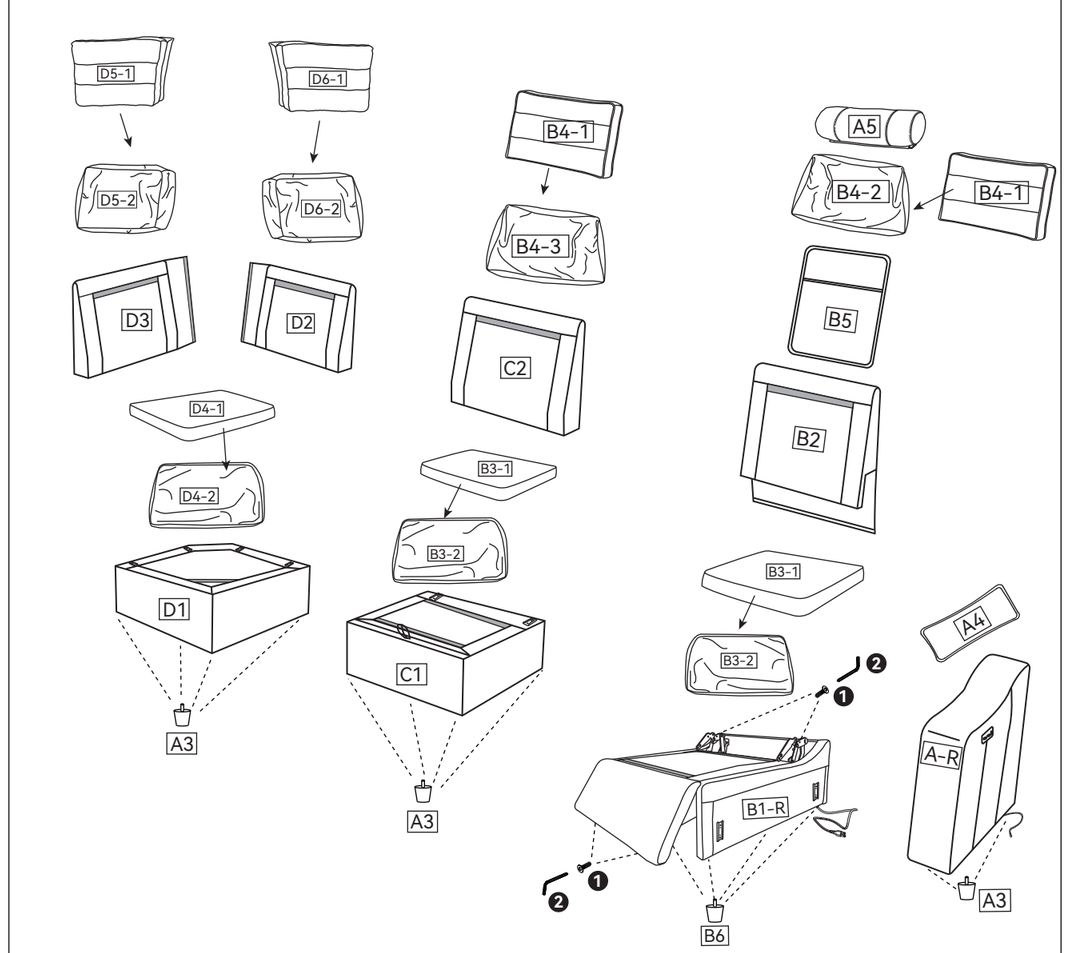

Box A

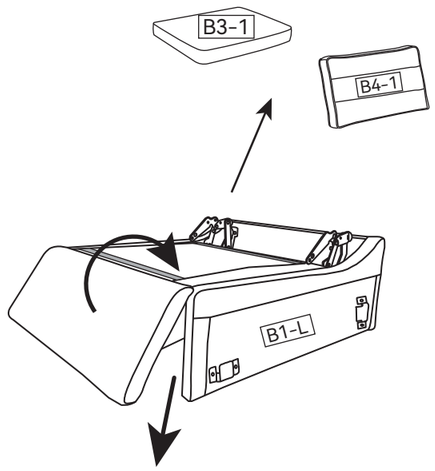

Box B

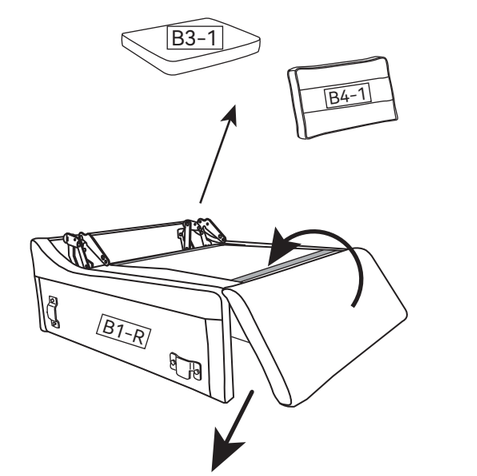

Box C

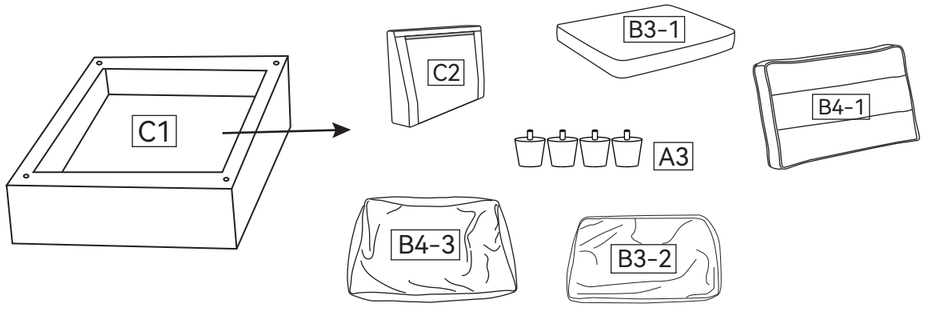

Box D

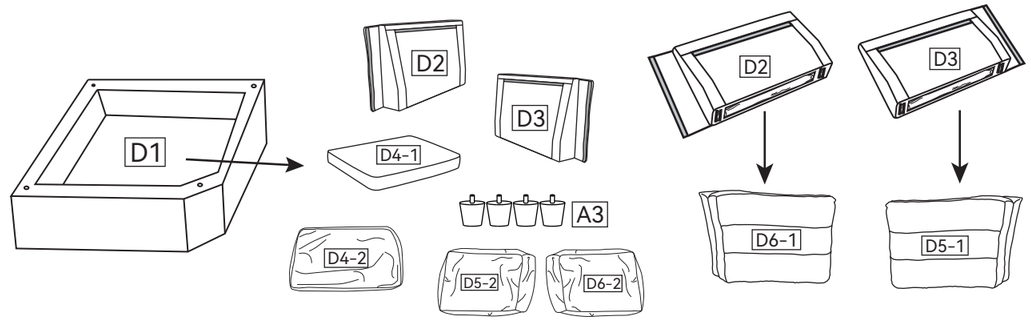

Box E

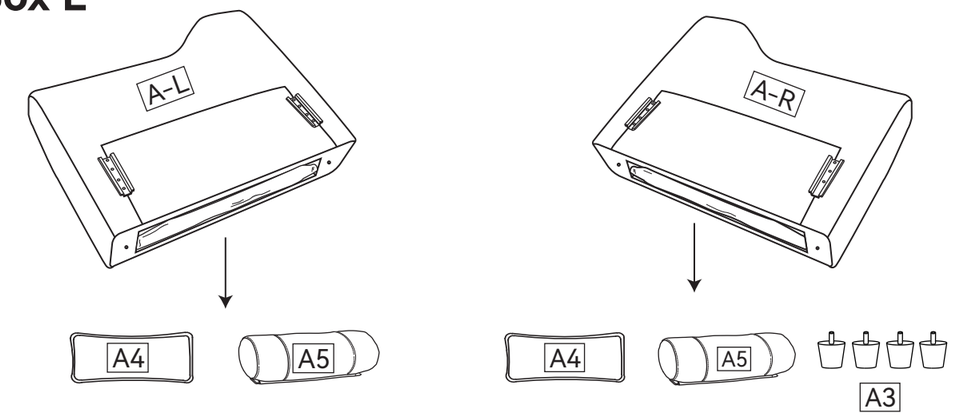

Box F

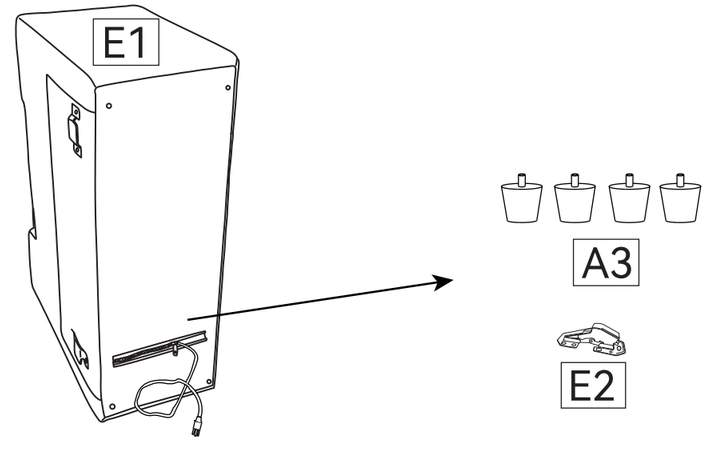

Parts List

Left / Right Armrests

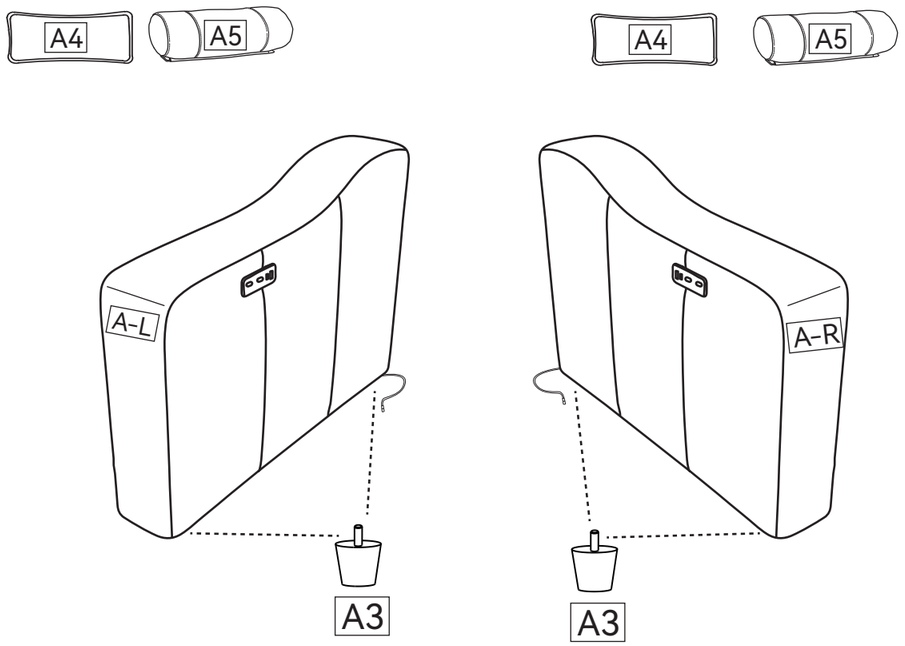

Box E

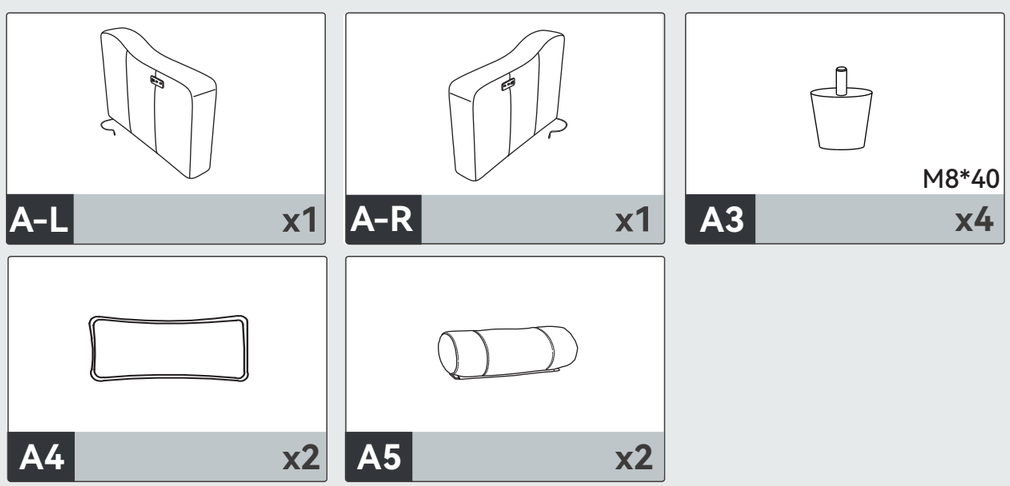

Email : **service@grandtunnel.com**

Step 1

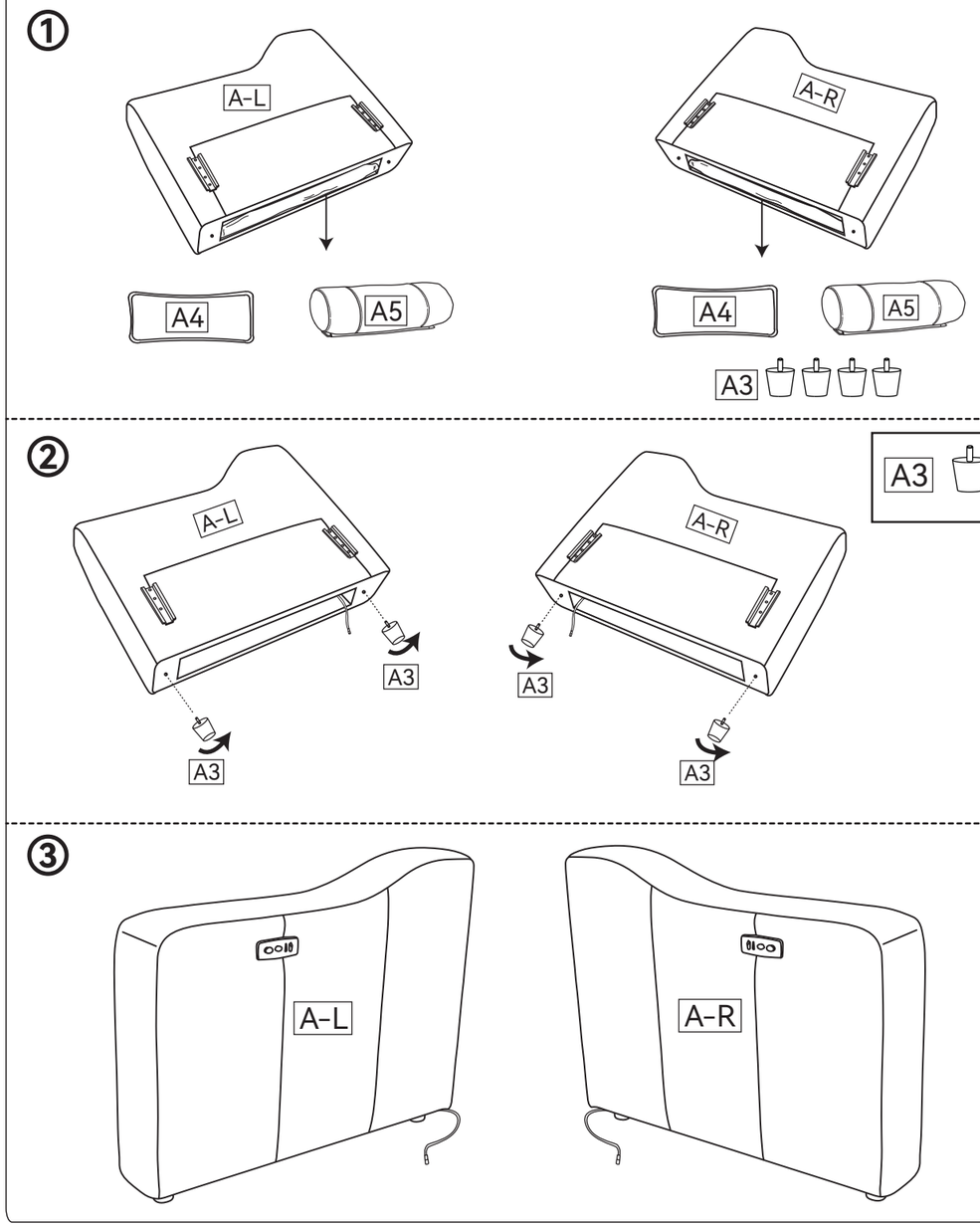

① Remove Part A-L and Part A-R from the packaging. Take Part A4 and Part A5 out of Part A-L, and remove Part A4, Part A5, and Part A3 ×4 from Part A-R.
② Align Part A3 with the corresponding holes on the bottom of Part A-L / Part A-R, then tighten securely.
③ Turn Part A-L / Part A-R upright. Left/right armrest assembly is complete.

Email : **service@grandtunnel.com**

Left Power Recliner Seat

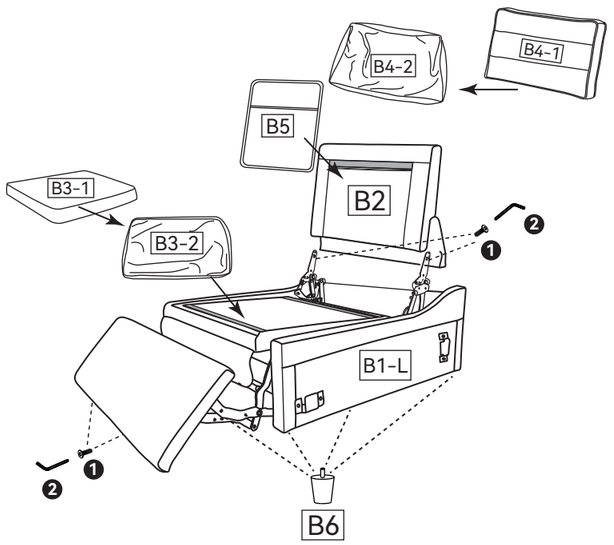

Box A

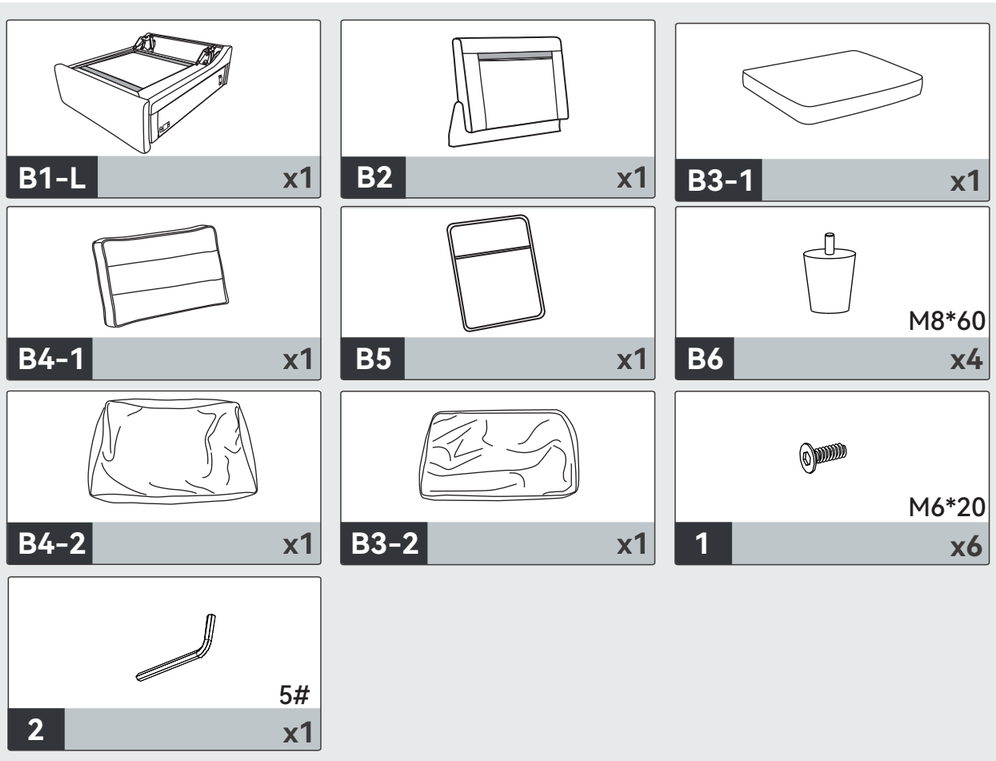

Email : **service@grandtunnel.com**

EN

Right Power Recliner Seat

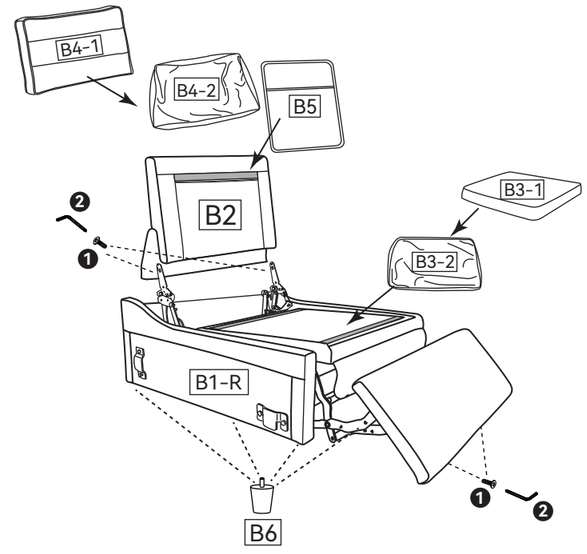

Box B

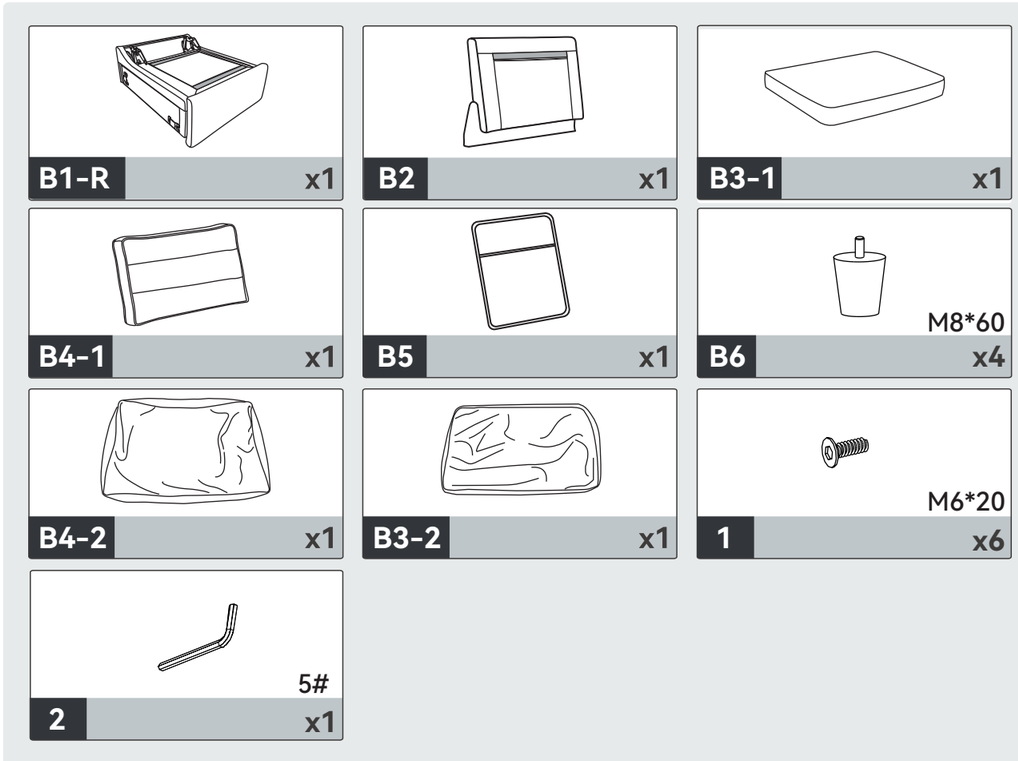

Email : **service@grandtunnel.com**

Step 1

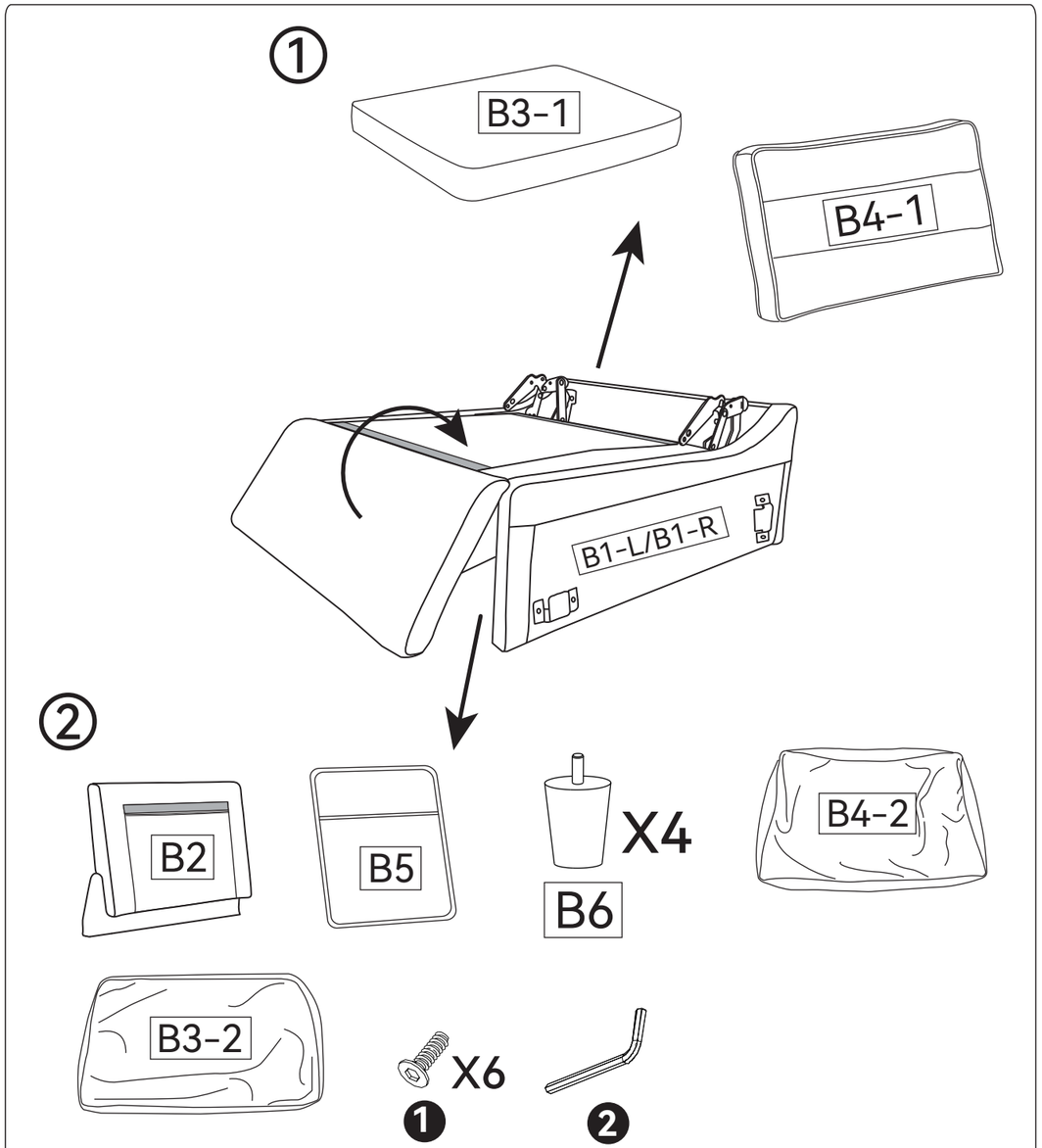

NOTE: After unpacking, Part B3-1 and Part B4-1 may not immediately return to their full shape. Gently pat and reshape the foam to help it expand. Allow 48–72 hours for full expansion. Do not use the cushions until they have fully expanded.

① Remove Part B4-1 and Part B3-1 from Part B1-L / Part B1-R.
② Lift the front footrest panel of Part B1-L / Part B1-R and remove Part B2, Part B5, Part B6 ×4, Part B3-2, Part B4-2, Screw ① ×6, and Wrench ②.

Email : **service@grandtunnel.com**

Step 2

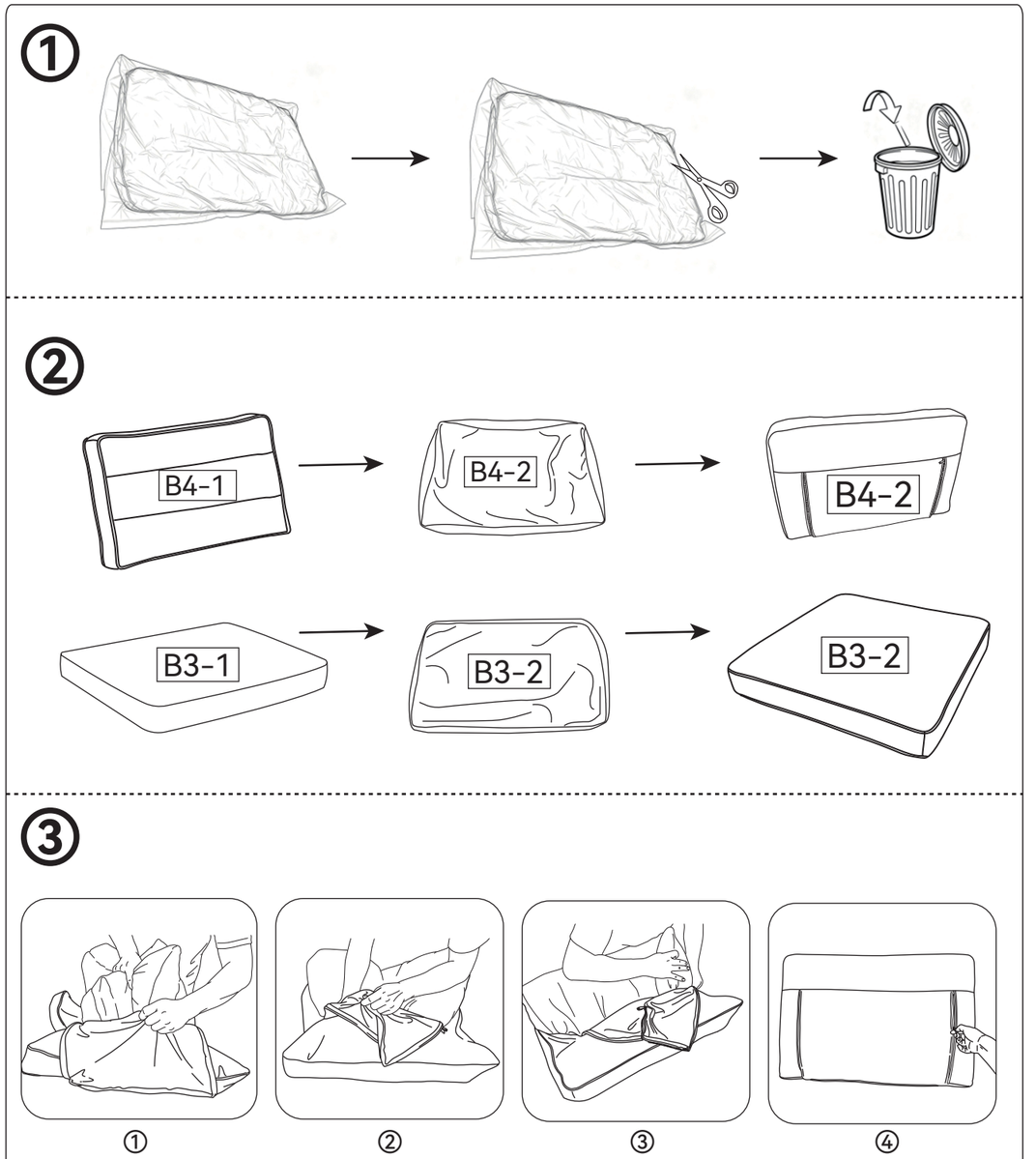

① Carefully cut open the vacuum-sealed bags. Remove and discard all packaging.
② The striped side of Part B4-1 is the front. Make sure it is facing the correct direction, then insert Part B4-1 into Part B4-2 and Part B3-1 into Part B3-2.
③ Adjust and shape the cushions as shown.

Email : **service@grandtunnel.com**

EN

Step 3

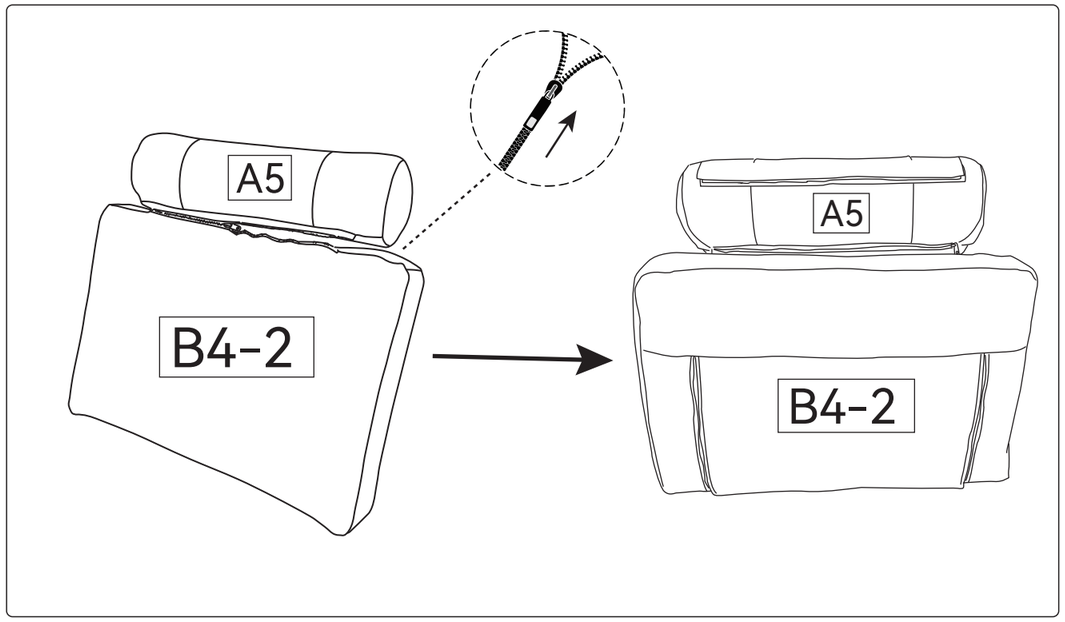

Connect Part A5 from Box E to Part B4-2 using the zipper.

Step 4

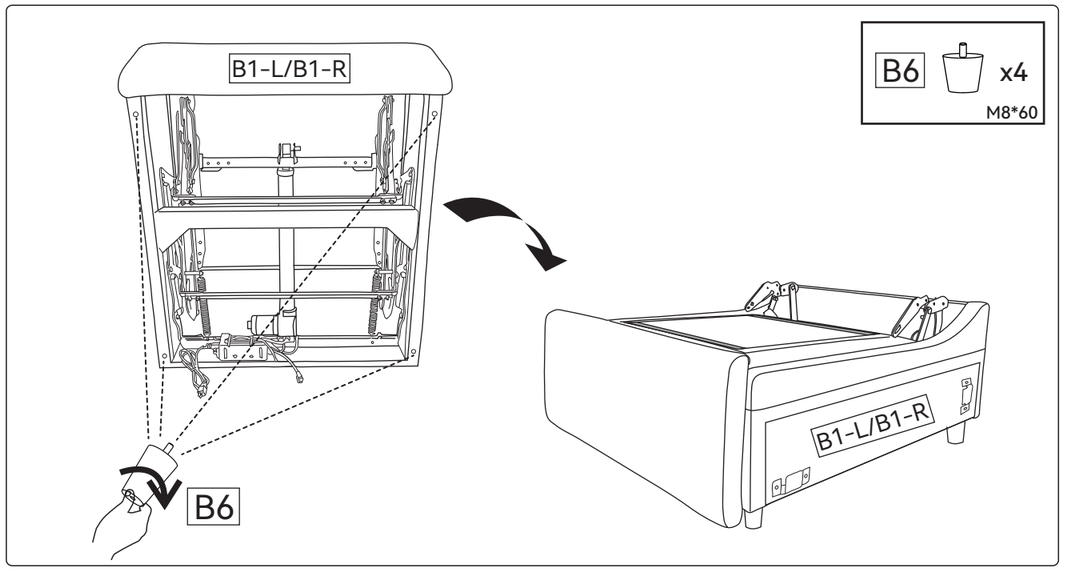

Align Part B6 with the corresponding holes on Part B1-L / Part B1-R, then tighten securely.

Email : **service@grandtunnel.com**

EN

Step 5

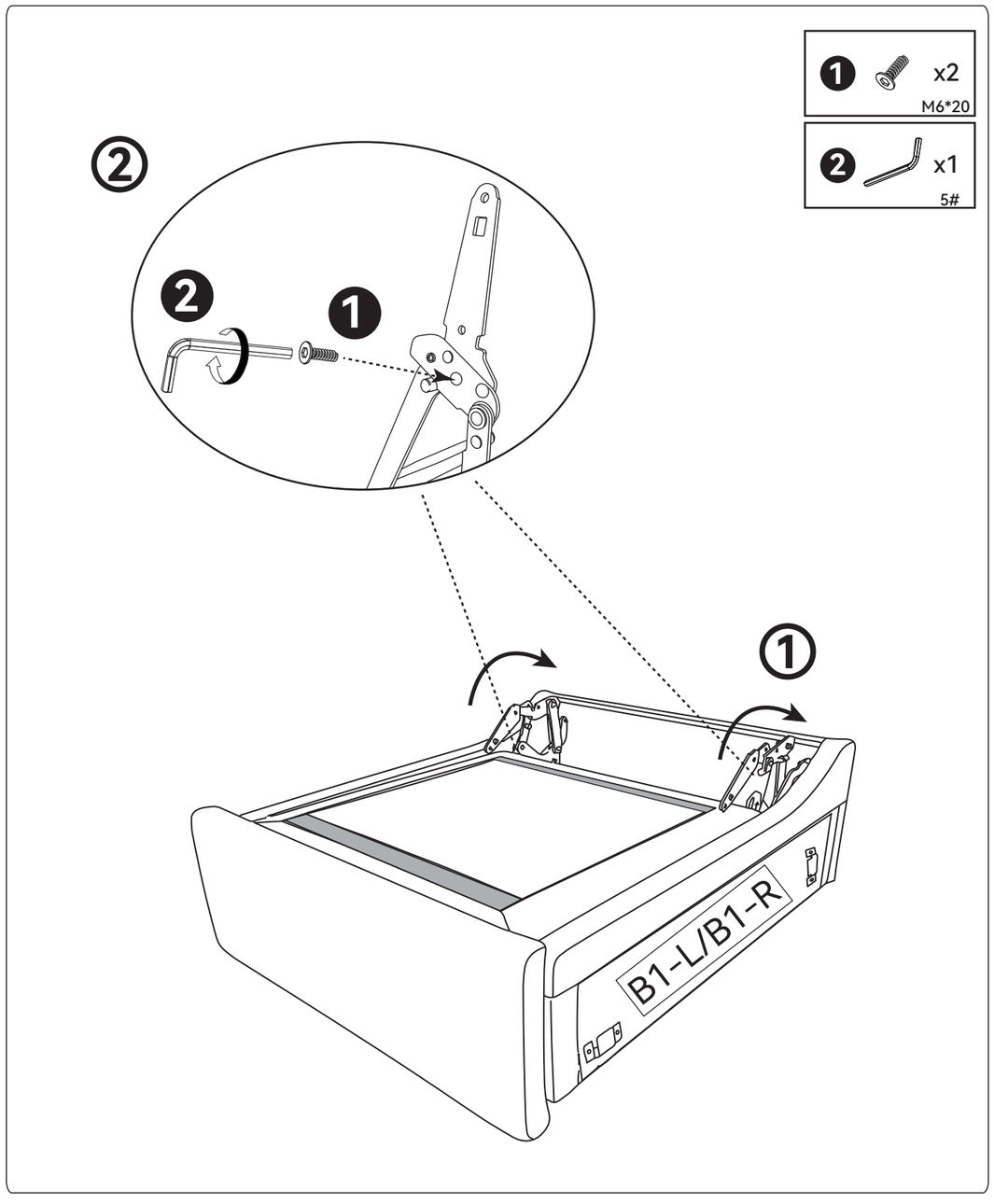

① Raise the backrest frame connector at the rear of Part B1-L / Part B1-R to the upright position.
② Align Screw 1 with the corresponding holes on the backrest brackets, then tighten Screw 1 securely using Wrench 2.

Email : **service@grandtunnel.com**

Step 6

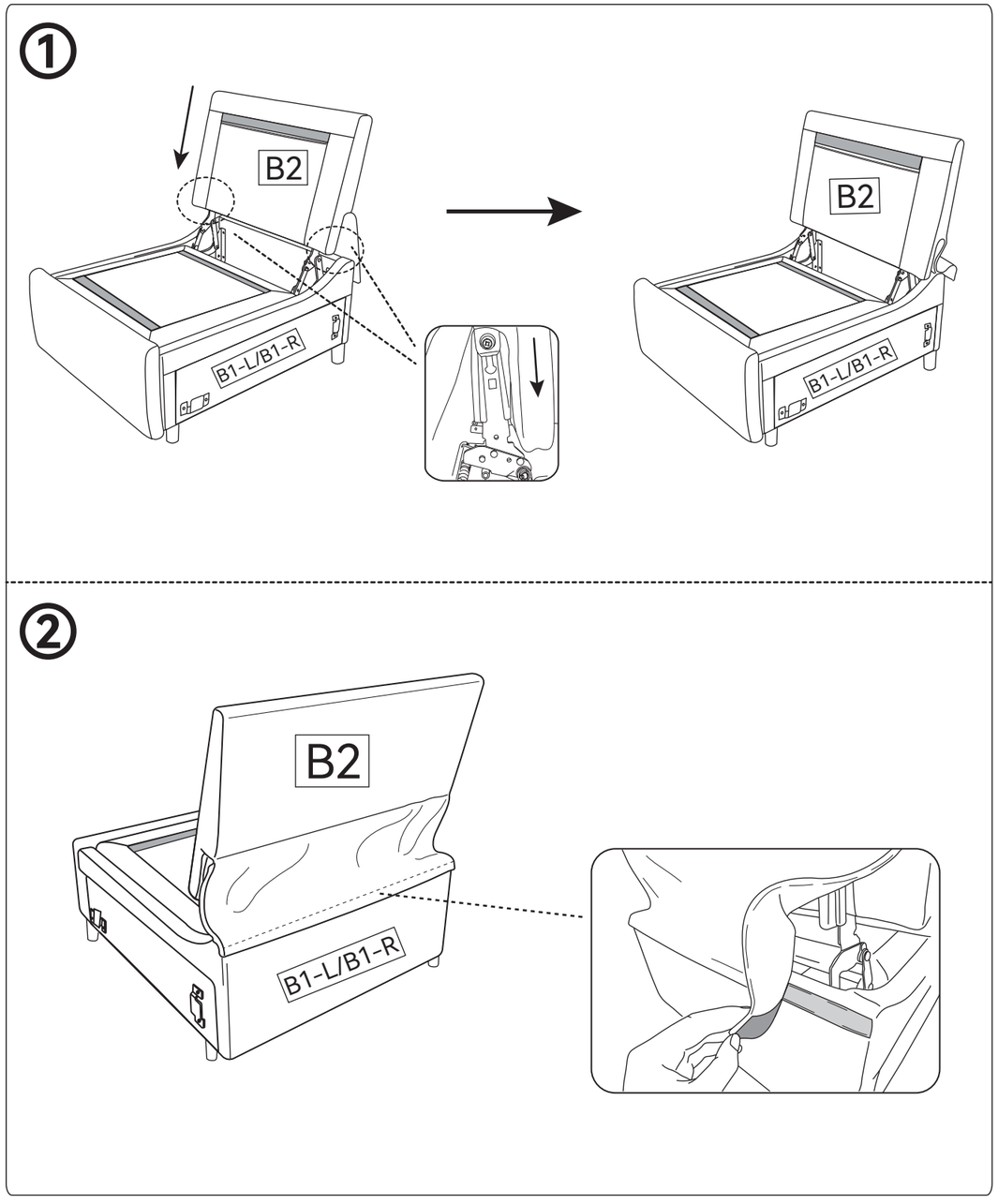

① Align Backrest Part B2 with Part B1-L / Part B1-R and slide it fully into place.
② Pull down the backrest fabric and secure it with the hook-and-loop fasteners.The left / right power recliner seat assembly is complete.

Email : **service@grandtunnel.com**

Left Armrest Installation

Step 1

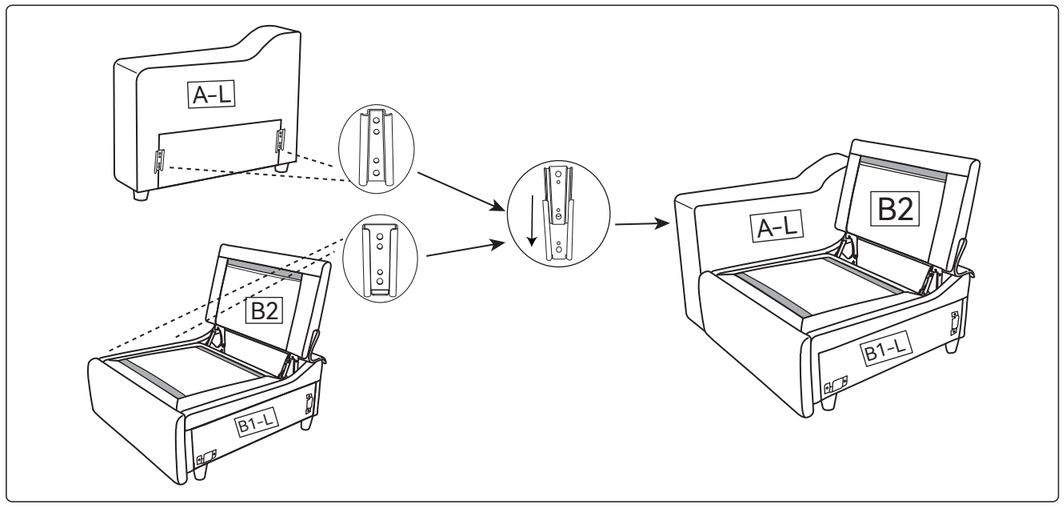

Align the assembled Left Armrest Part A-L with the mounting brackets on Base Part B1-L, then slide it down until it is fully secured.

Step 2

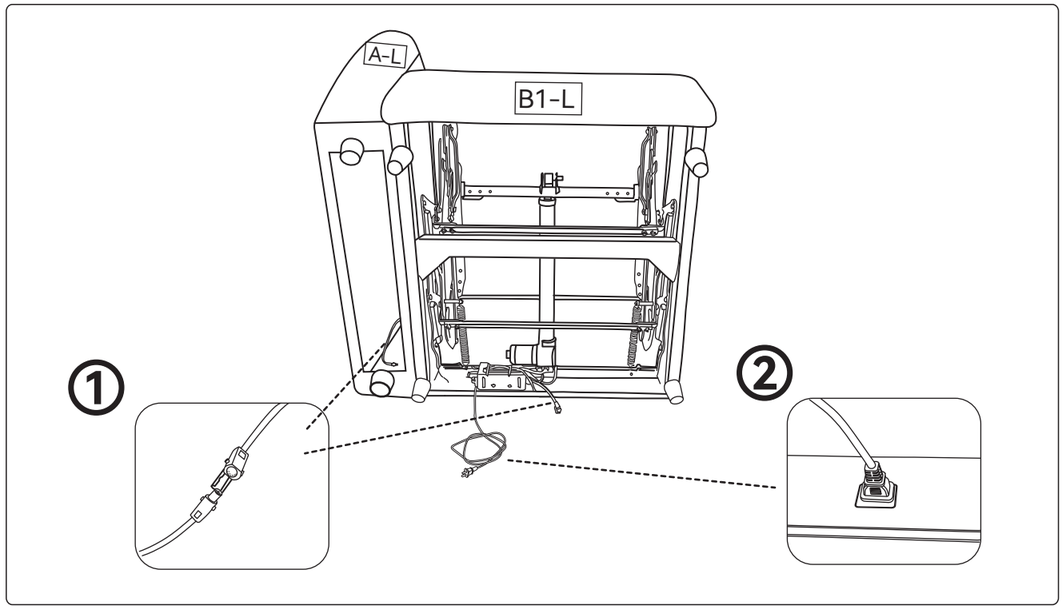

① Connect the function cable from Part A-L to Part B1-L.
② Connect the power cord from Part B1-L to a power outlet.

Email : **service@grandtunnel.com**

Step 3

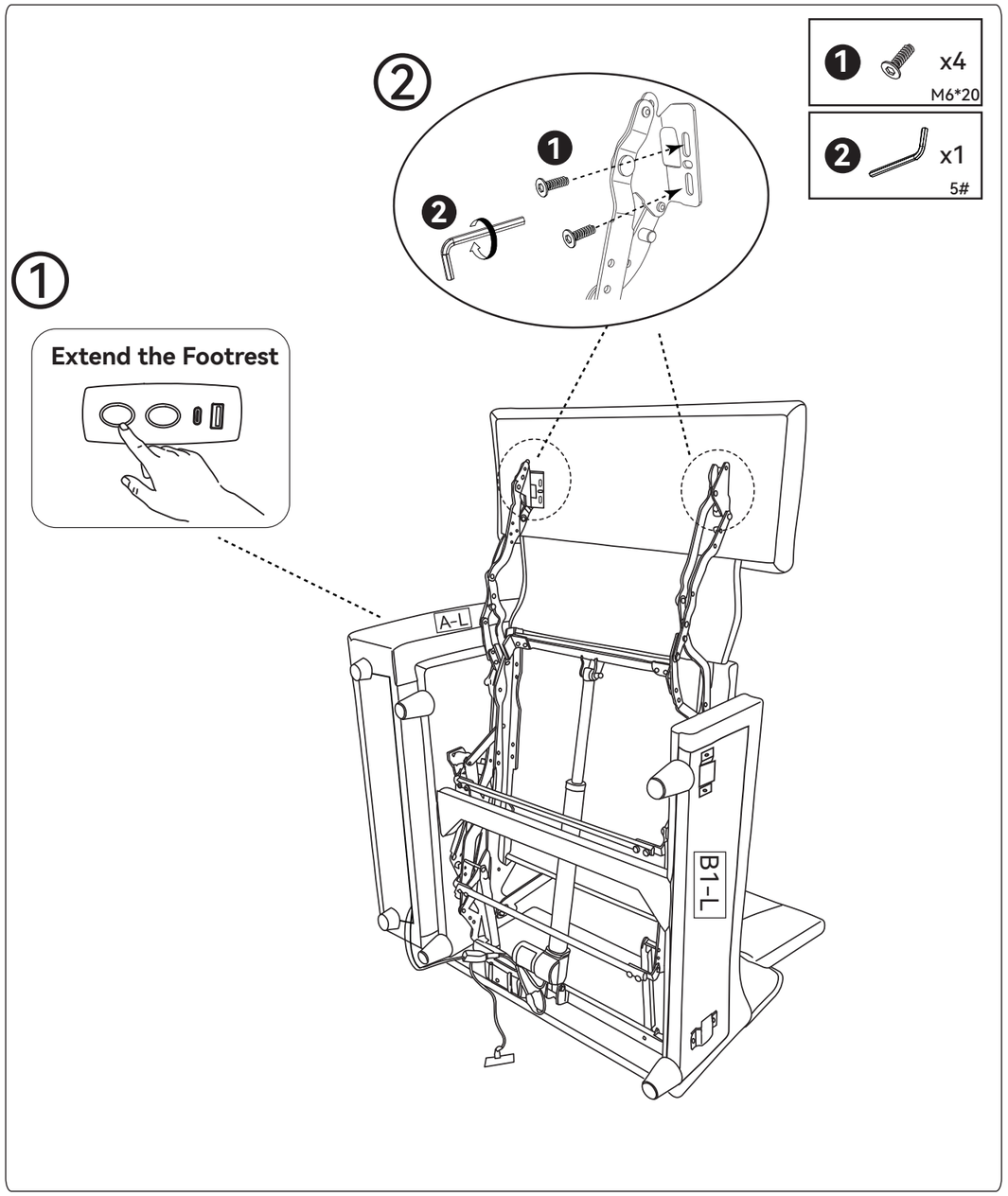

Extend the Footrest
① Press the first button on the side of Part A-L to extend the large footrest on Part B1-L.
② With the footrest fully extended, align Screw 1 with the corresponding holes on the footrest and metal bracket. Tighten securely using Wrench 2.

Email : **service@grandtunnel.com**

EN

Step 4

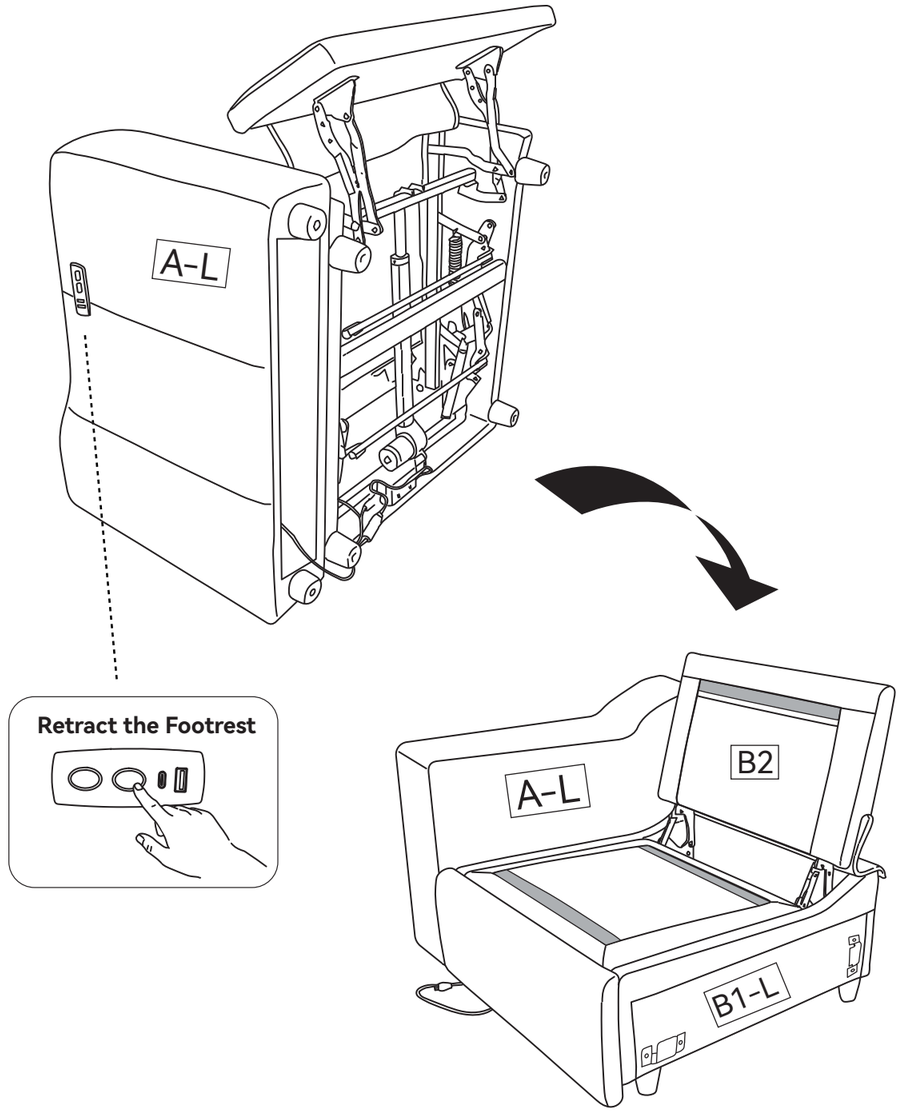

Retract the Footrest
Press the second button on the side of Part A-L to retract the footrest, then return the sofa to its upright position.

Email : **service@grandtunnel.com**

Step 5

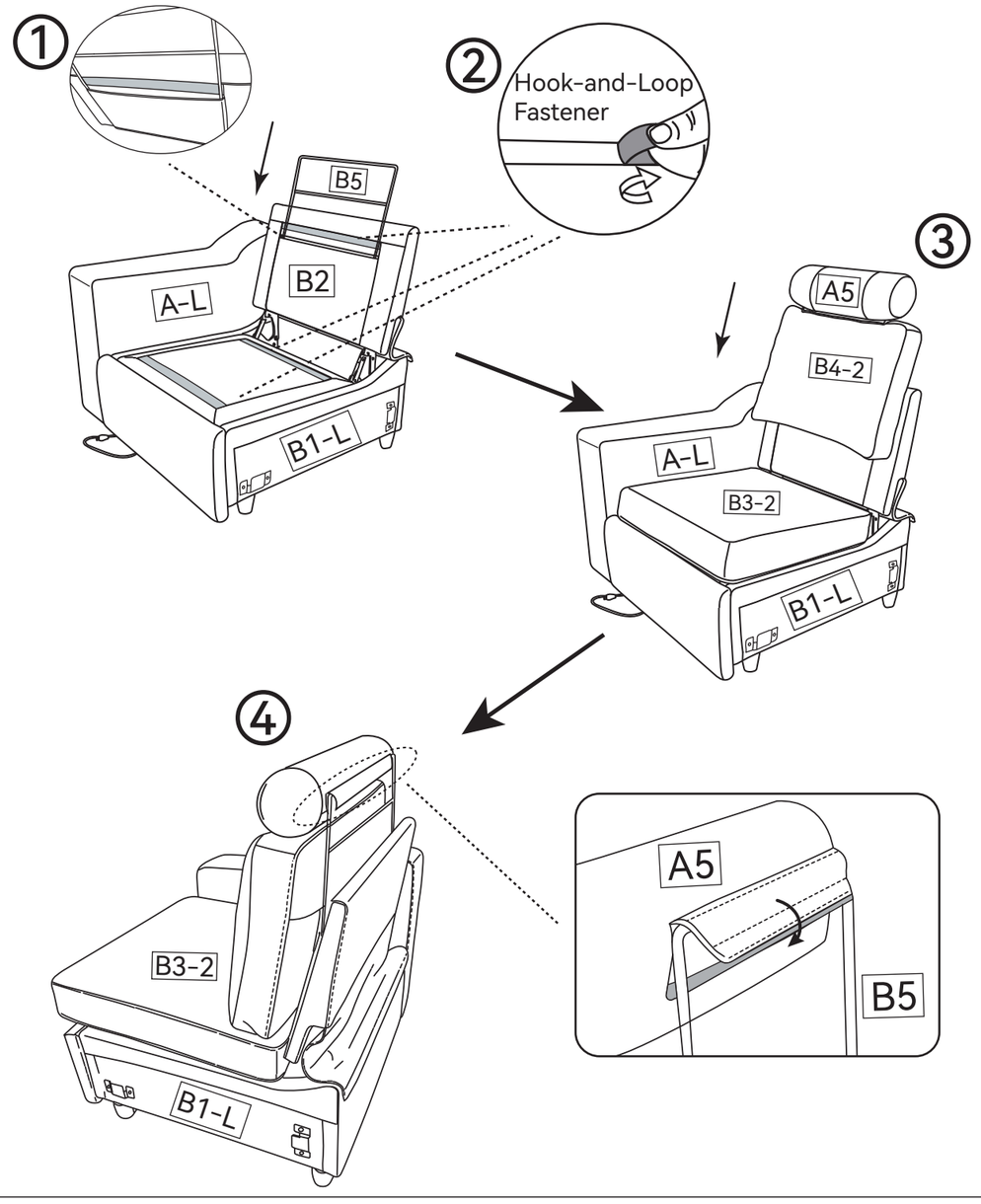

① Install Part B5 onto Part B2. Make sure Part B5 passes through the front pocket of Part B2.
② Remove the protective strips from the hook-and-loop fasteners on Part B2 and Part B1-L.
③ Position Part B4-2 and Part B3-2, then secure them with the hook-and-loop fasteners.
④ Secure the hook-and-loop fastener on the bottom of Part A5 to Part B5.

Email : **service@grandtunnel.com**

Step 6

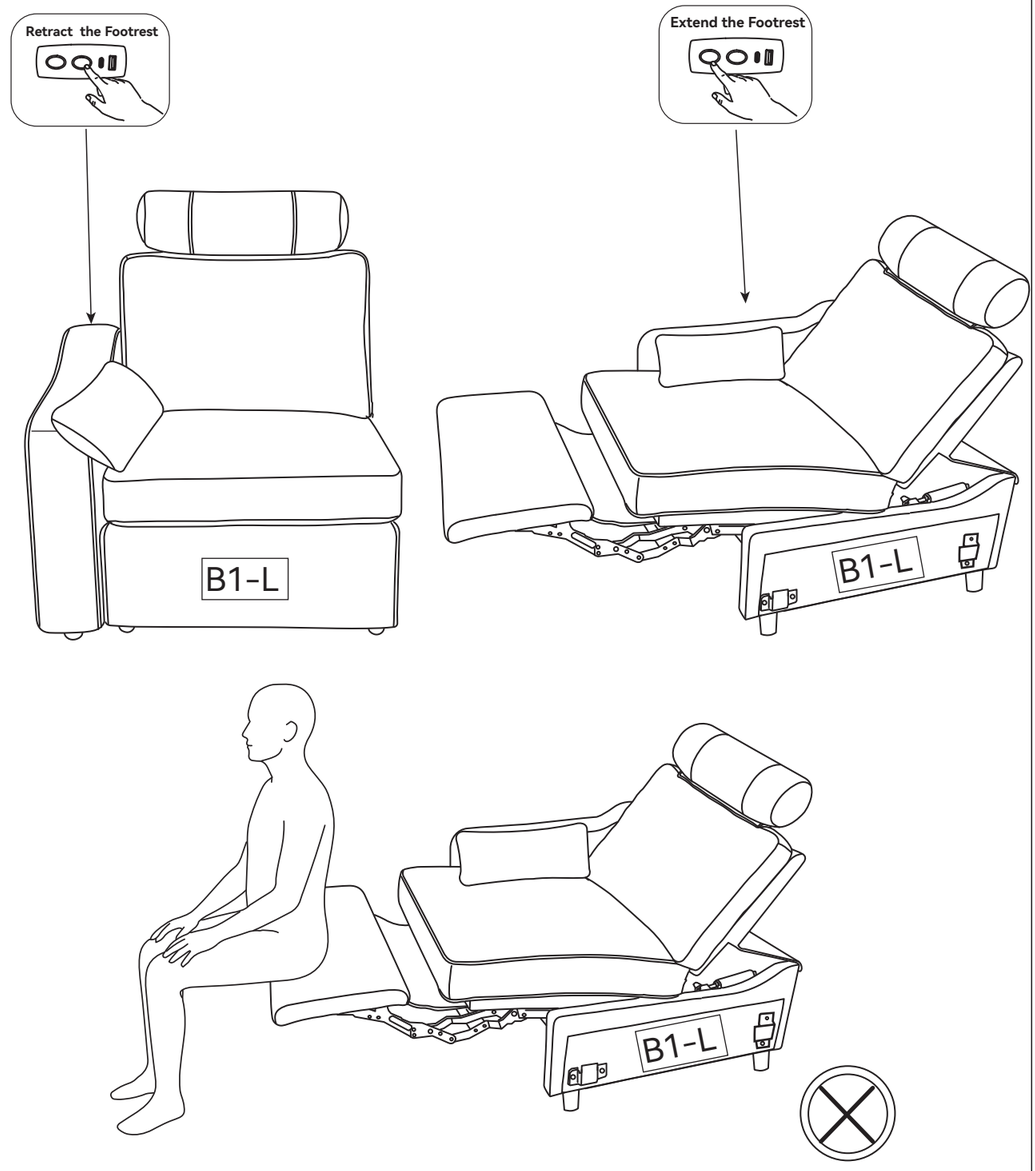

WARNING: Do not sit or stand on the extended footrest when the power reclining mechanism is fully extended.

The left power recliner section assembly is complete.

Email : **service@grandtunnel.com**

EN

Right Armrest Installation

Step 1

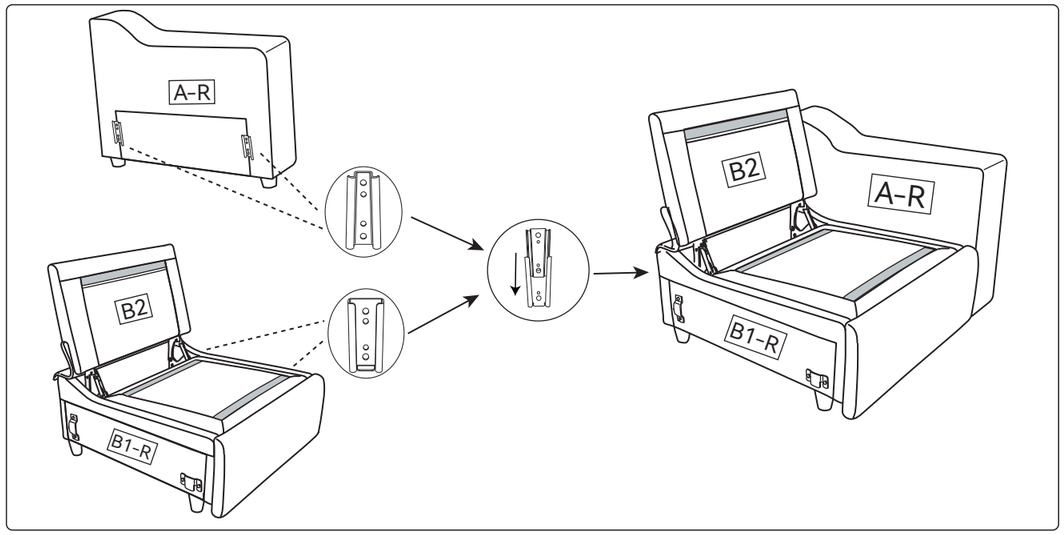

Align the assembled Right Armrest Part A-R with the mounting brackets on Base Part B1-R, then slide it down until it is fully secured.

Step 2

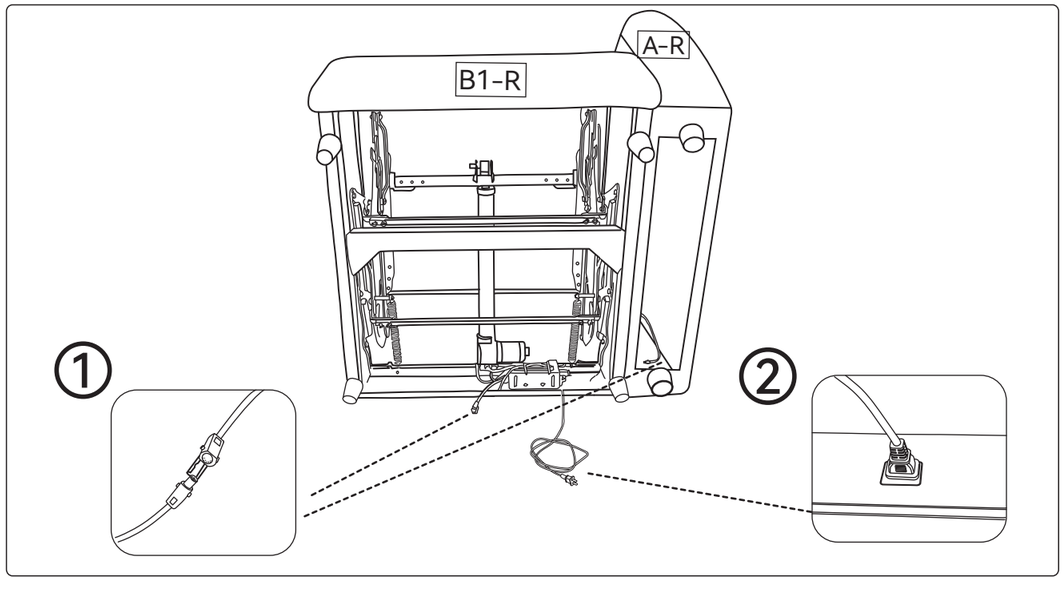

① Connect the function cable from Part A-R to Part B1-R.
② Connect the power cord from Part B1-R to a power outlet.

Email : **service@grandtunnel.com**

Step 3

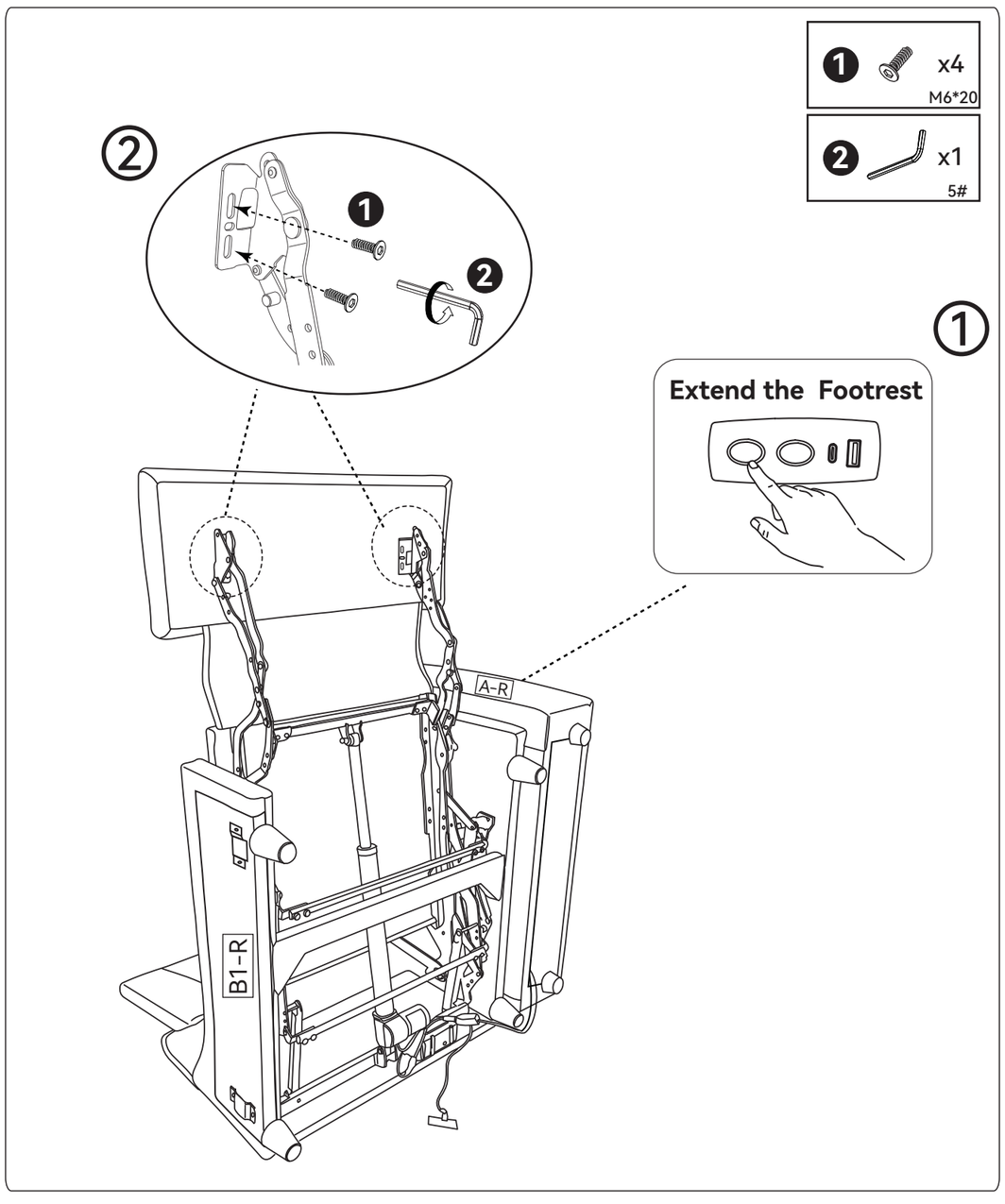

Extend the Footrest
① Press the first button on the side of Part A-R to extend the large footrest on Part B1-R.
② With the footrest fully extended, align Screw 1 with the corresponding holes on the footrest and metal bracket. Tighten securely using Wrench 2.

Email : **service@grandtunnel.com**

EN

Step 4

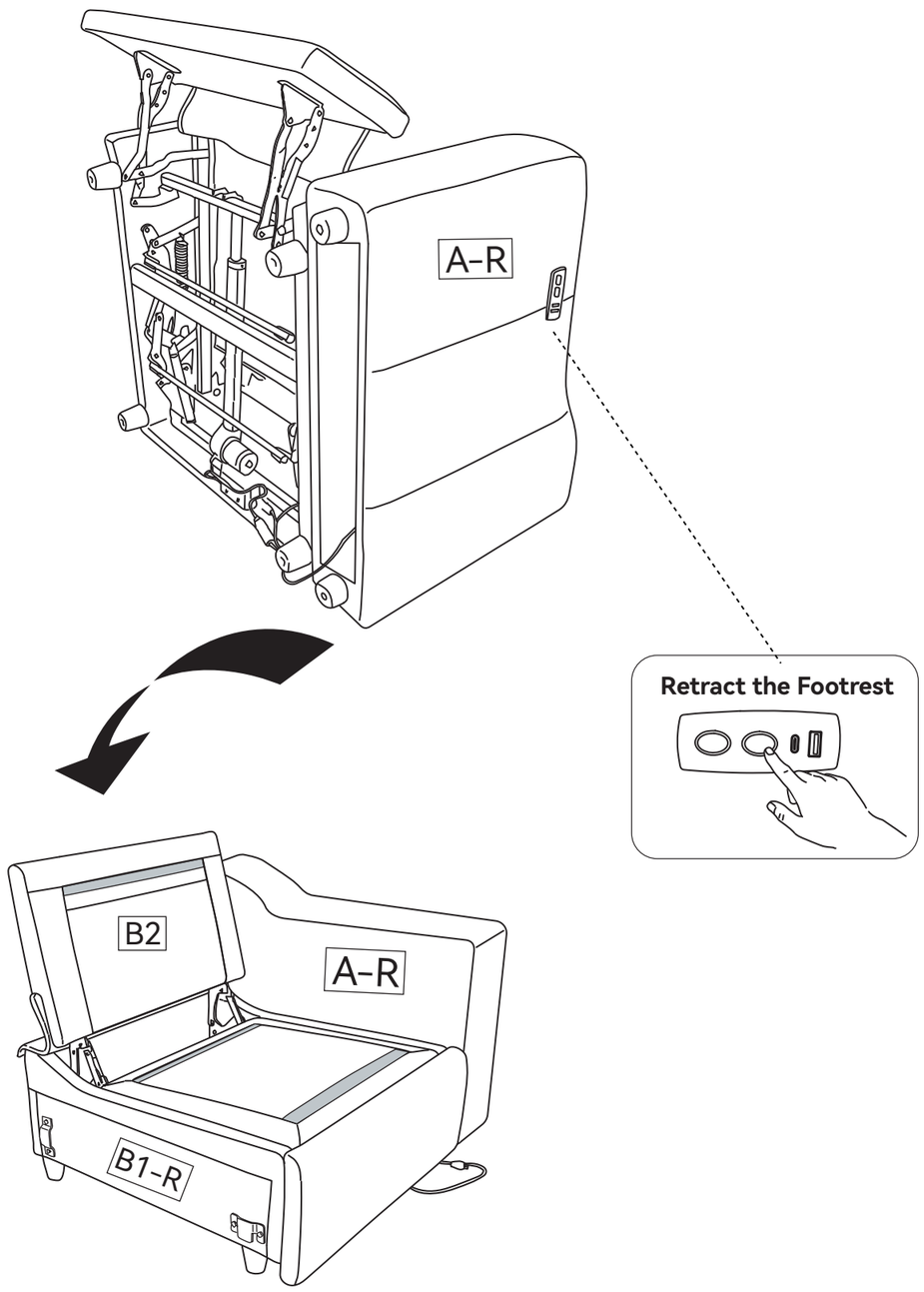

Retract the Footrest
Press the second button on the side of Part A-R to retract the footrest, then return the sofa to its upright position.

Email : **service@grandtunnel.com**

Step 5

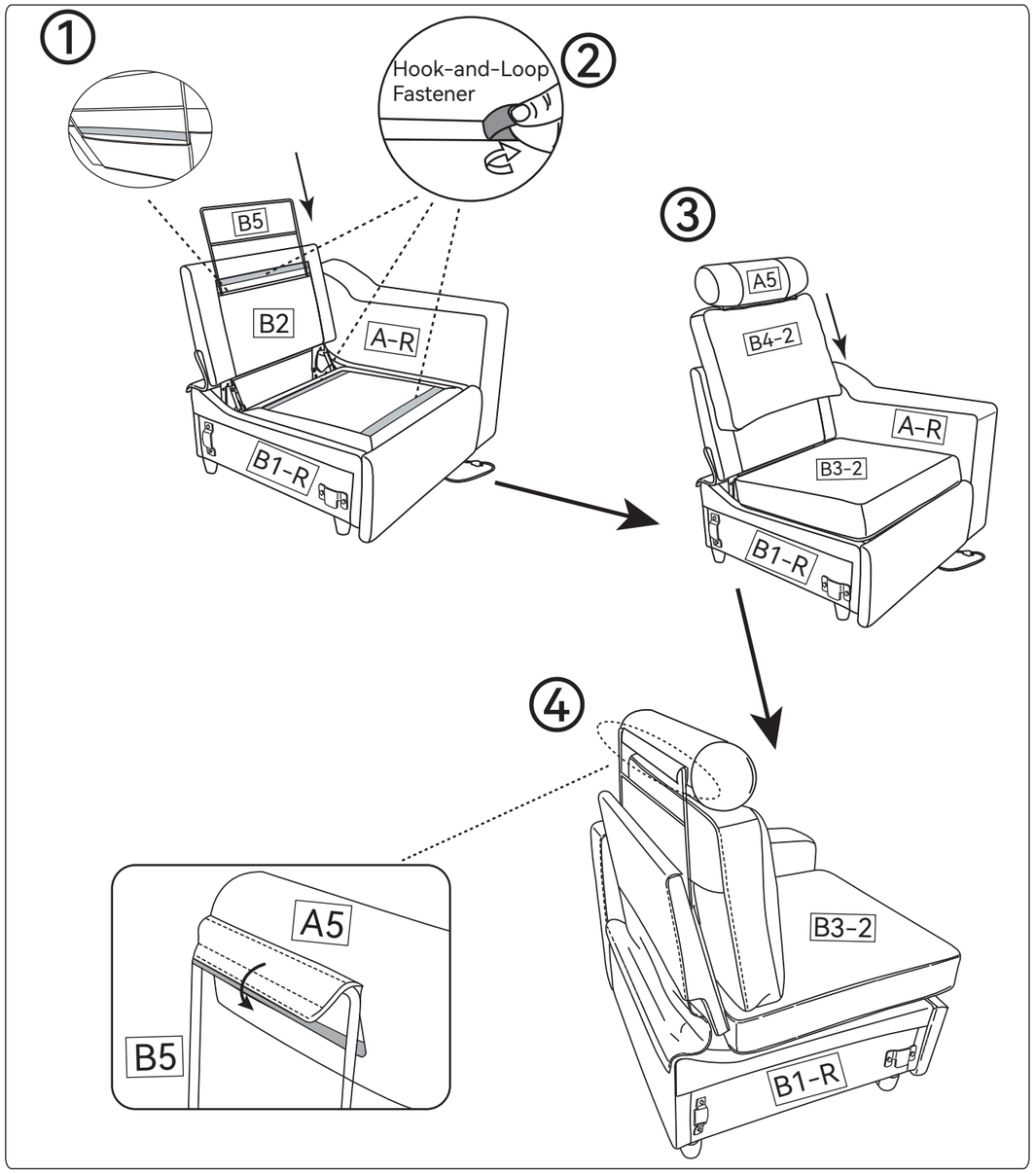

① Install Part B5 onto Part B2. Make sure Part B5 passes through the front pocket of Part B2.
② Remove the protective strips from the hook-and-loop fasteners on Part B2 and Part B1-R.
③ Position Part B4-2 and Part B3-2, then secure them with the hook-and-loop fasteners.
④ Secure the hook-and-loop fastener on the bottom of Part A5 to Part B5.

Email : **service@grandtunnel.com**

EN

Step 6

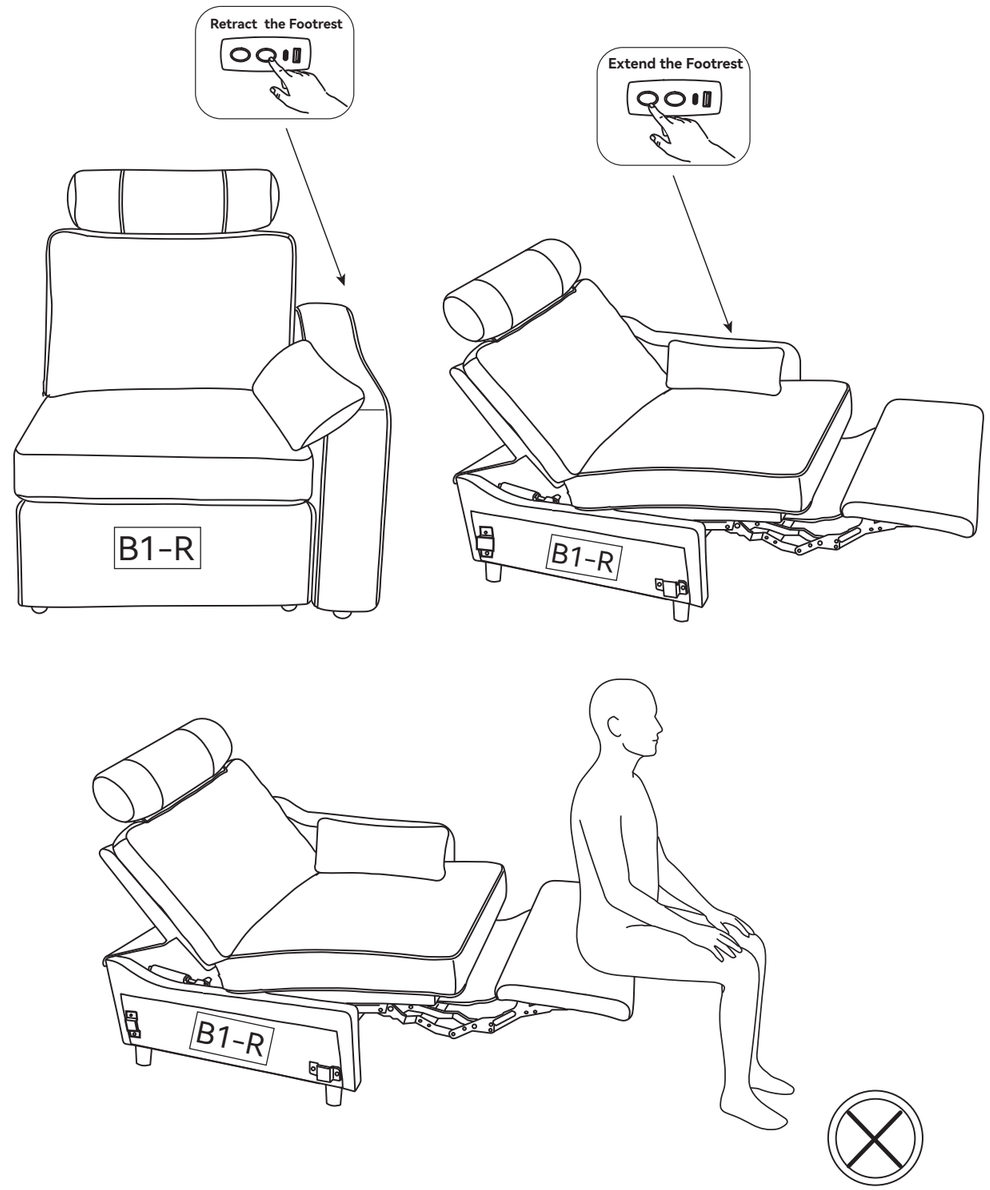

⚠ **WARNING:** Do not sit or stand on the extended footrest when the power reclining mechanism is fully extended.

The right power recliner section assembly is complete.

Non-Power Middle Seat

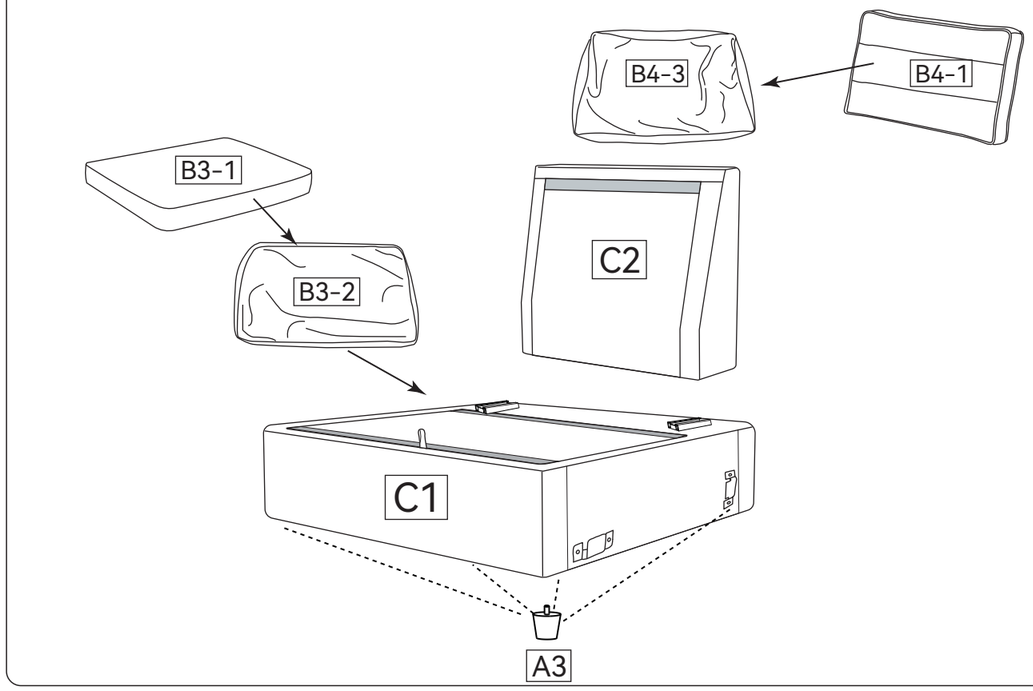

BOX C

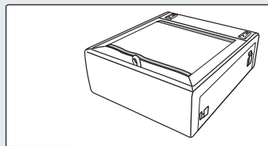

C1 x1

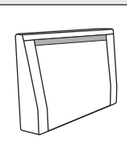

C2 x1

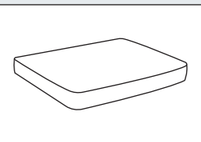

B3-1 x1



B4-1 x1



M8*40

A3 x4



B4-3 x1



B3-2

Step 1

①

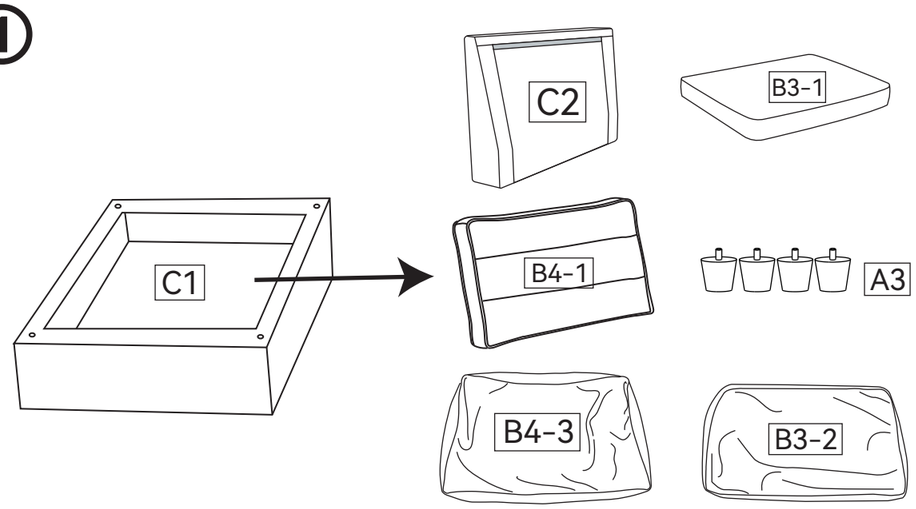

NOTE:Part B3-1 and Part B4-1 may not immediately return to their full shape after unpacking. Gently pat and reshape the foam to help it expand. Allow 48–72 hours for full expansion. Do not use the cushions until they have fully expanded.

②

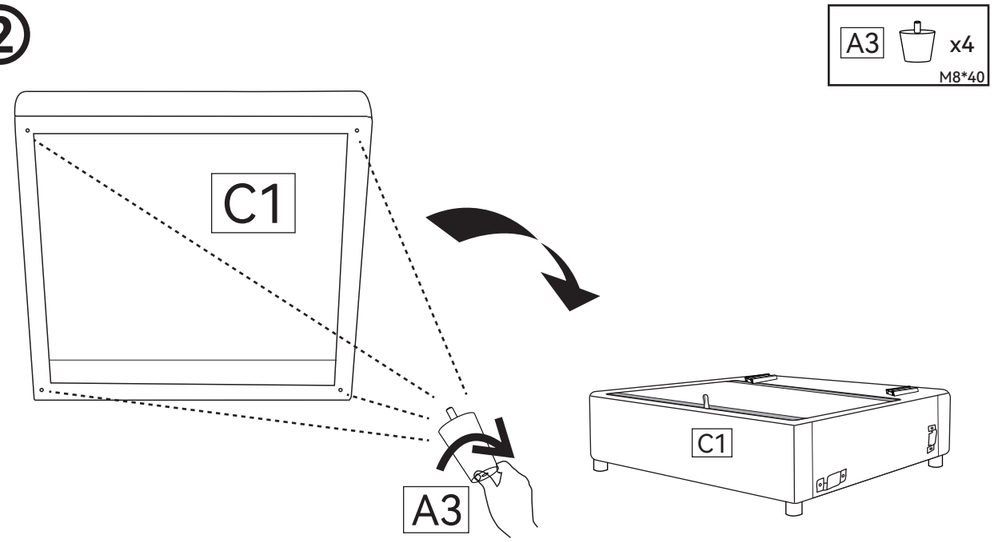

① Remove Part C2, Part B3-1, Part B4-1, Part B4-3, Part B3-2, and Part A3 ×4 from Part C1.
② Align Part A3 with the corresponding holes on Part C1, then tighten securely.

Email : **service@grandtunnel.com**

Step 2

①

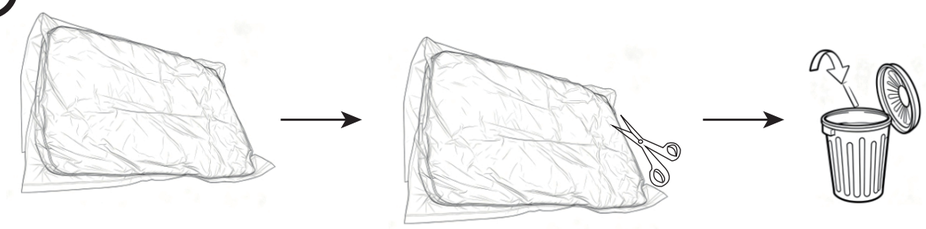

②

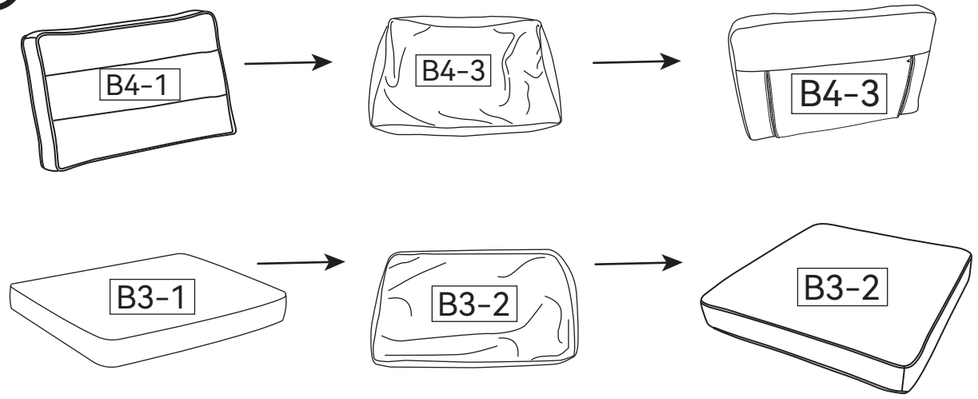

③

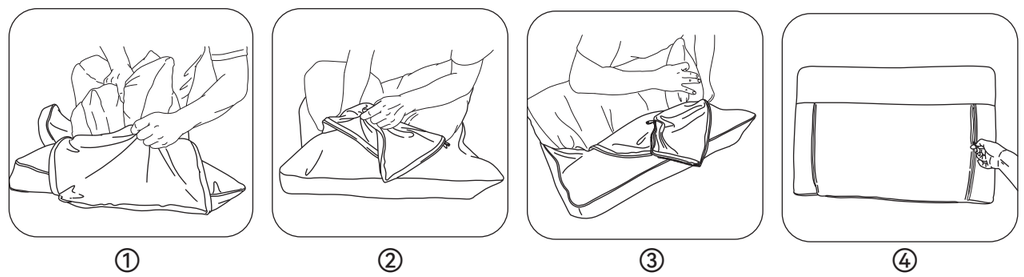

① Carefully cut open the vacuum-sealed bags. Remove and discard all packaging.
② The striped side of Part B4-1 is the front. Make sure it is facing the correct direction, then insert Part B4-1 into Part B4-3 and Part B3-1 into Part B3-2.
③ Adjust and shape the cushions as shown.

Email : **service@grandtunnel.com**

EN

Step 3

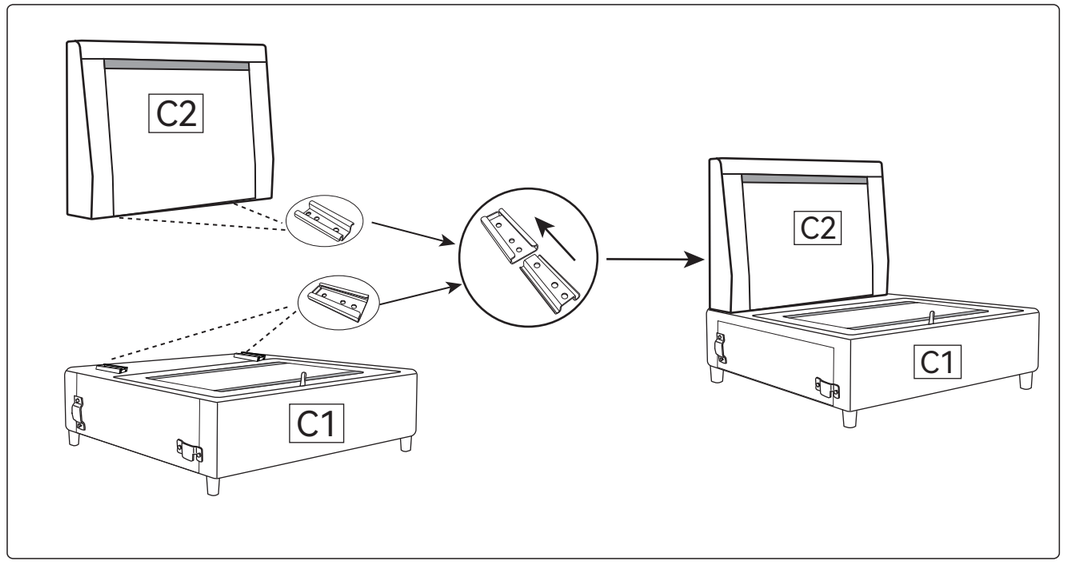

Slide the mounting brackets on Part C2 horizontally into the corresponding slots on Part C1, moving from front to back, until fully engaged.

Step 4

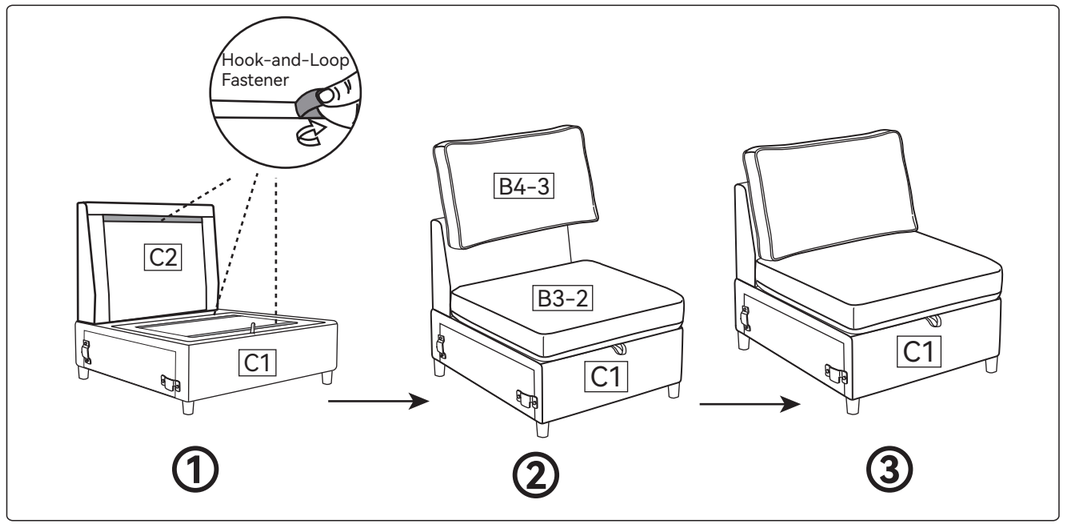

① Remove the protective strips from the hook-and-loop fasteners on Part C1 and Part C2.
② Position Part B4-3 and Part B3-2 as shown.
③ The non-power middle seat assembly is complete.

Email : **service@grandtunnel.com**

Corner seat

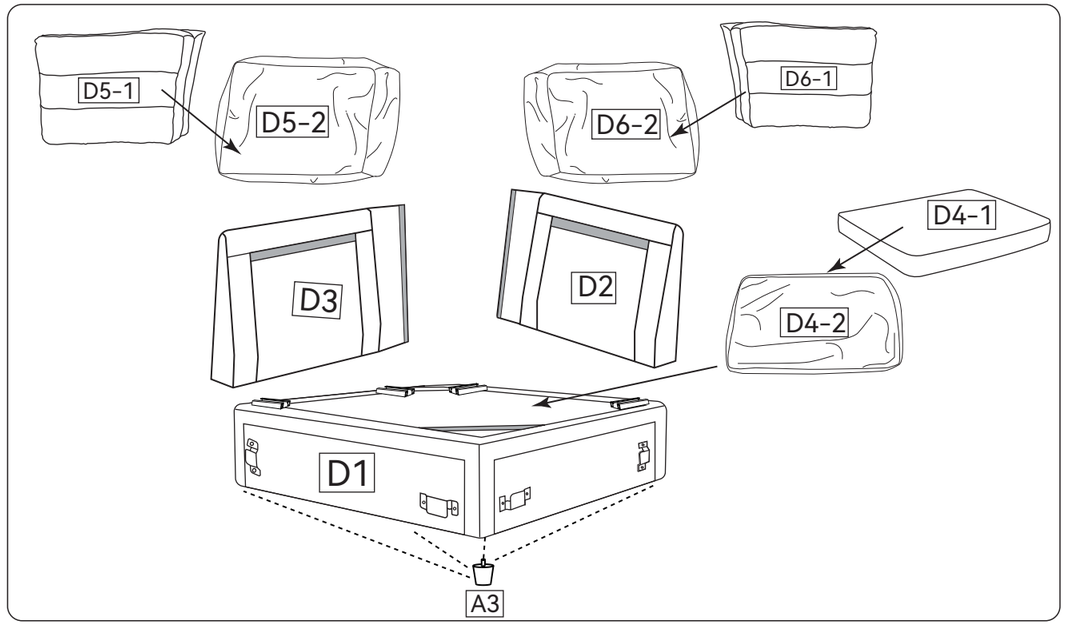

Box D

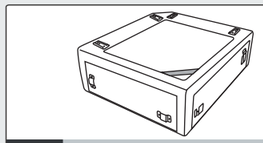

D1 x1

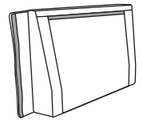

D2 x1

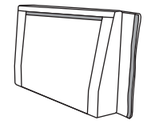

D3 x1

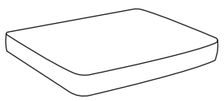

D4-1 x1

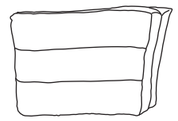

D5-1 x1

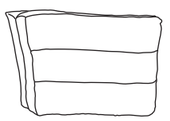

D6-1 x1



M8*40
A3 x4



D4-2 x1



D5-2 x1

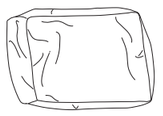

D6-2 x1

Email : **service@grandtunnel.com**

Step 1

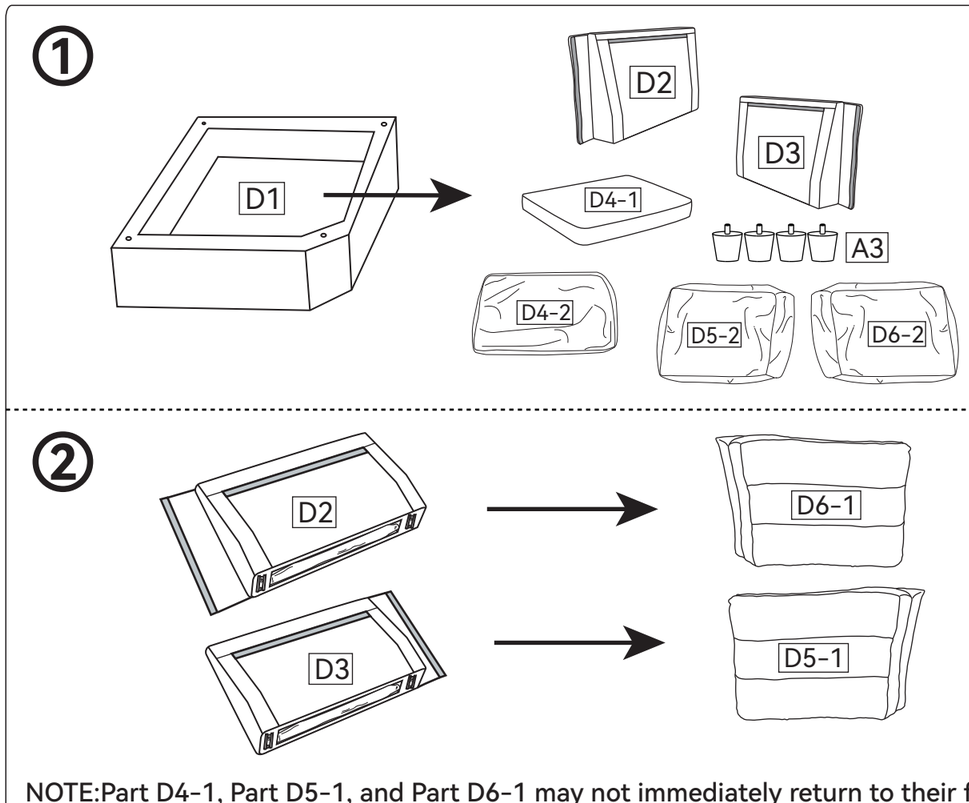

NOTE:Part D4-1, Part D5-1, and Part D6-1 may not immediately return to their full shape after unpacking. Gently pat and reshape the foam to help it expand. Allow 48–72 hours for full expansion. Do not use the cushions until they have fully expanded.

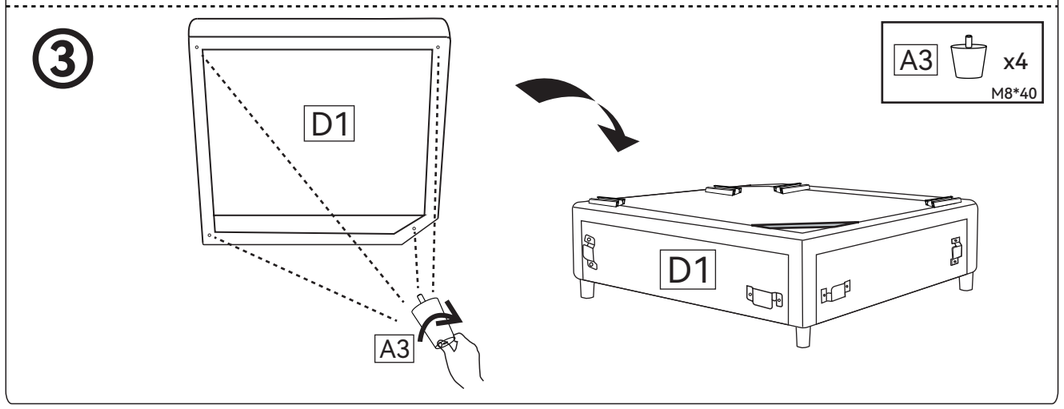

① Remove Part D2, Part D4-1, Part D3, Part D4-2, Part D5-2, Part D6-2, and Part A3 ×4 from Part D1.
② Remove Part D6-1 from Part D2 and Part D5-1 from Part D3.
③ Align Part A3 with the corresponding holes on Part D1, then tighten securely.

Email : **service@grandtunnel.com**

Step 2

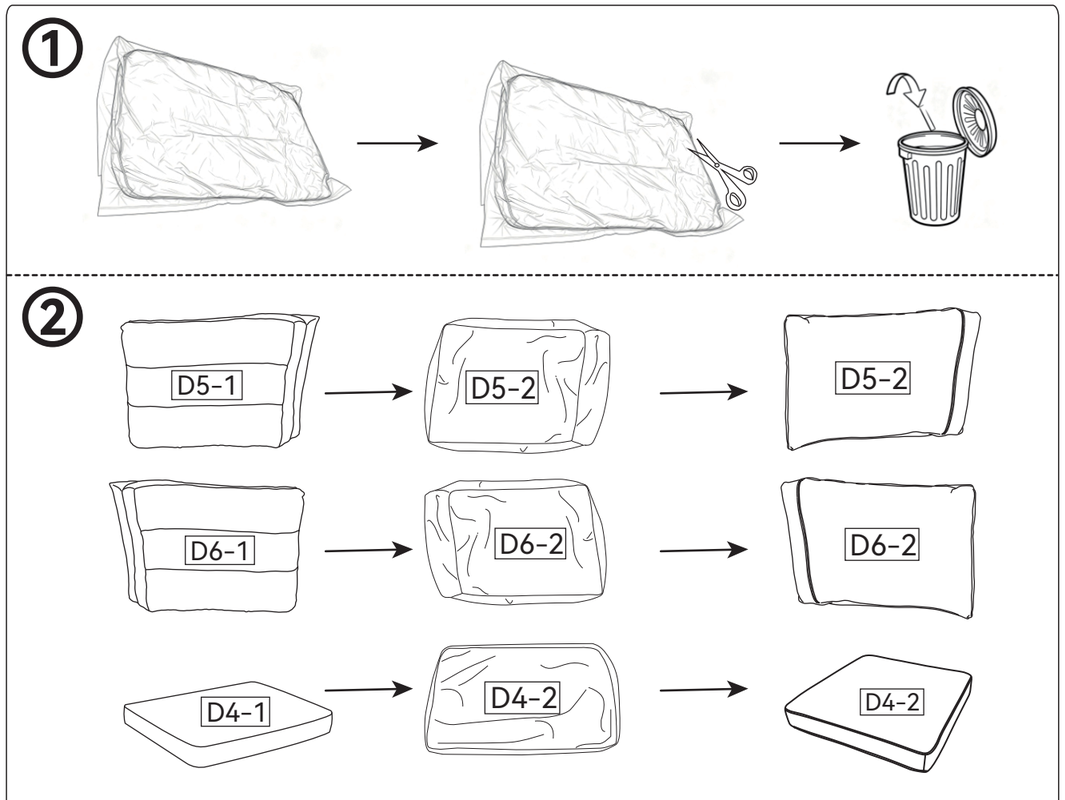

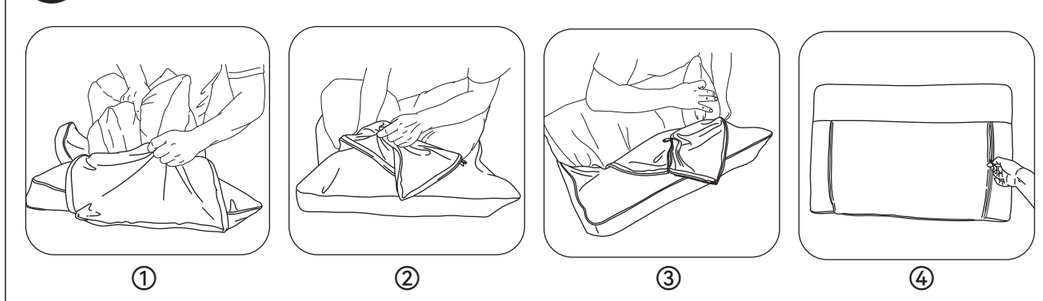

① Carefully cut open the vacuum-sealed bags. Remove and discard all packaging.
② The striped sides of Part D5-1 and Part D6-1 are the front. Make sure they are facing the correct direction, then insert Part D5-1 into Part D5-2, Part D6-1 into Part D6-2, and Part D4-1 into Part D4-2.
③ Adjust and shape the cushions as shown.

Email : **service@grandtunnel.com**

Step 3

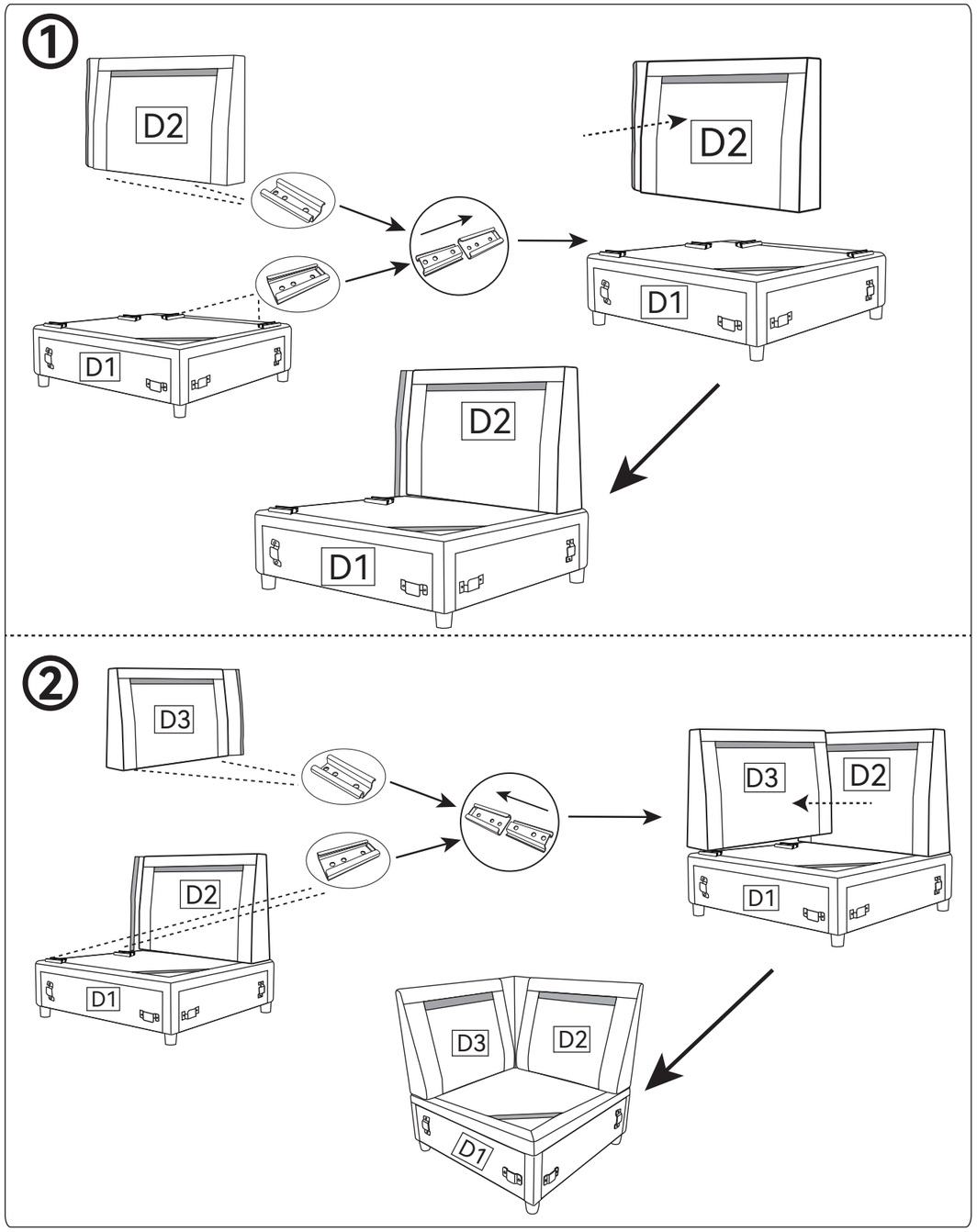

Slide the mounting brackets on Part D2 and Part D3, one at a time, horizontally into the corresponding slots on Part D1, moving from front to back.

Email : **service@grandtunnel.com**

Step 4

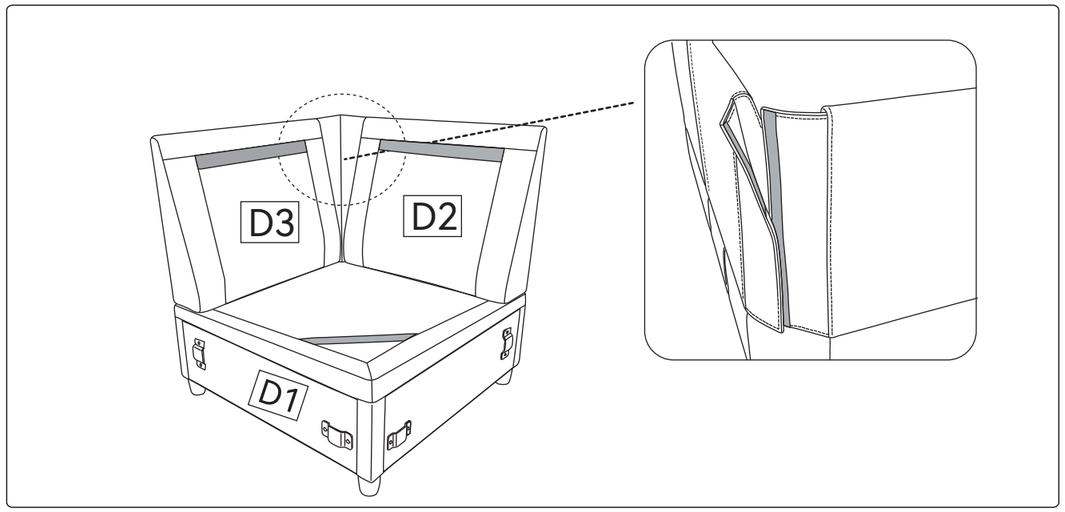

Remove the protective strips from the hook-and-loop fasteners on the back of Part D2 and Part D3, then press firmly to secure them in place.

Step 5

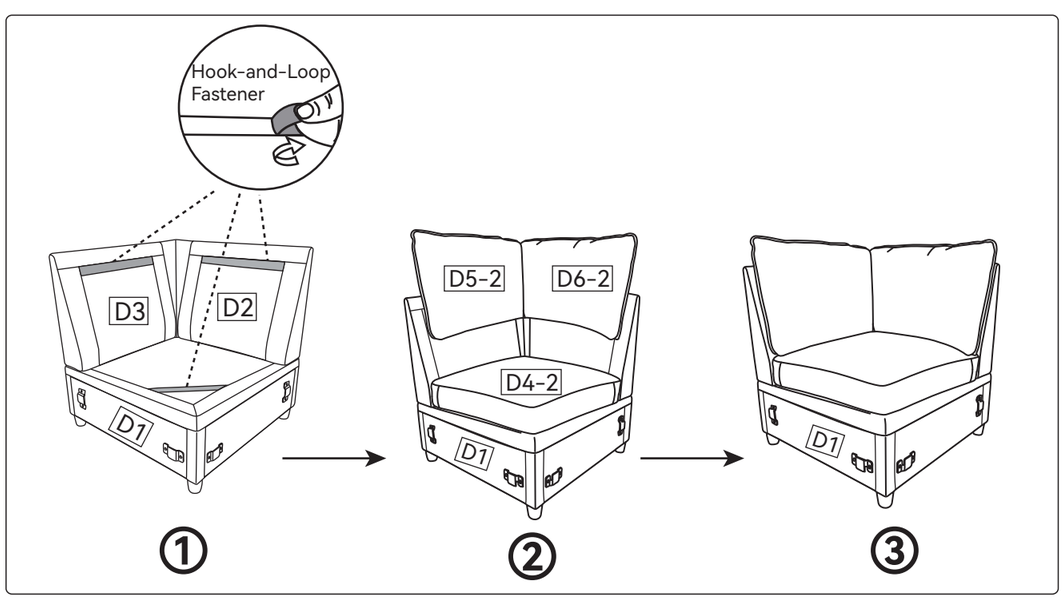

① Remove the protective strips from the hook-and-loop fasteners on Part D1, Part D2, and Part D3.
② Position Part D5-2, Part D6-2, and Part D4-2 as shown.
③ The corner seat assembly is complete.

Email : **service@grandtunnel.com**

Console

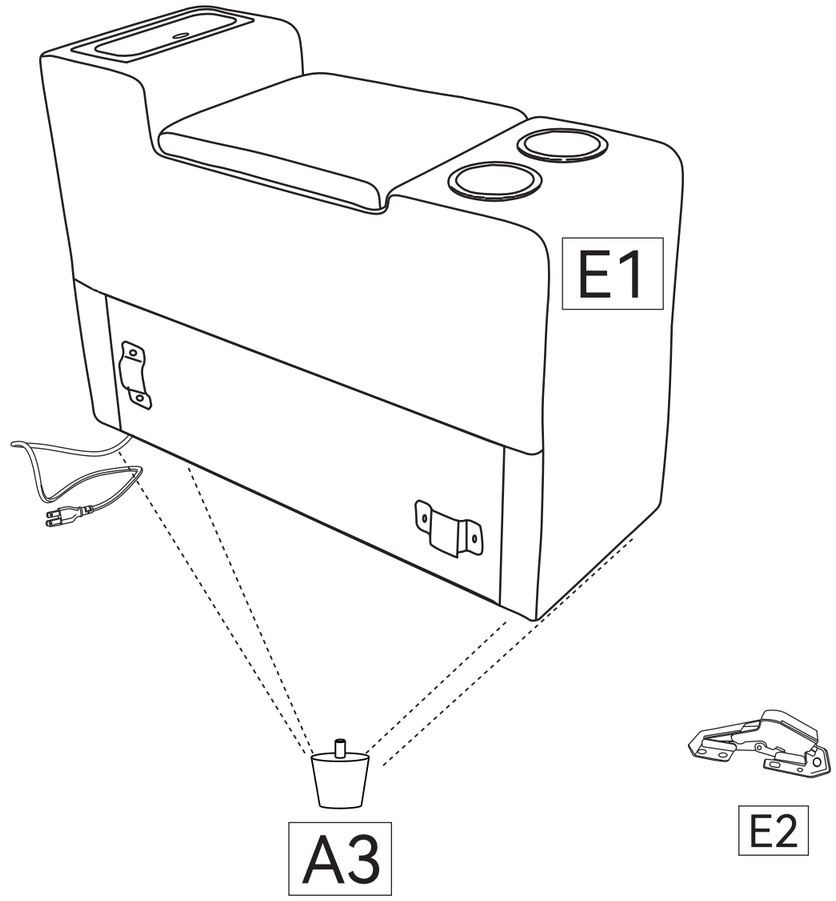

Box F

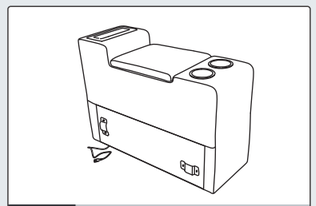

E1 x1

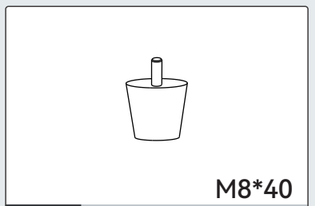

A3 x4

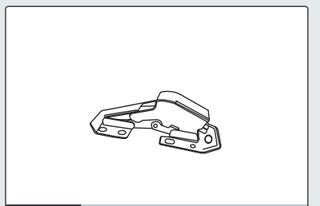

E2 x1

Email : **service@grandtunnel.com**

Step 1

①

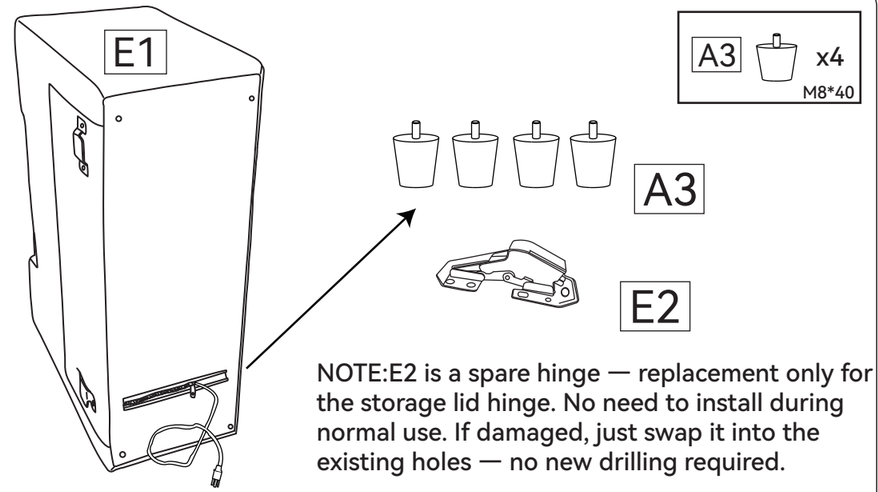

NOTE:E2 is a spare hinge — replacement only for the storage lid hinge. No need to install during normal use. If damaged, just swap it into the existing holes — no new drilling required.

②

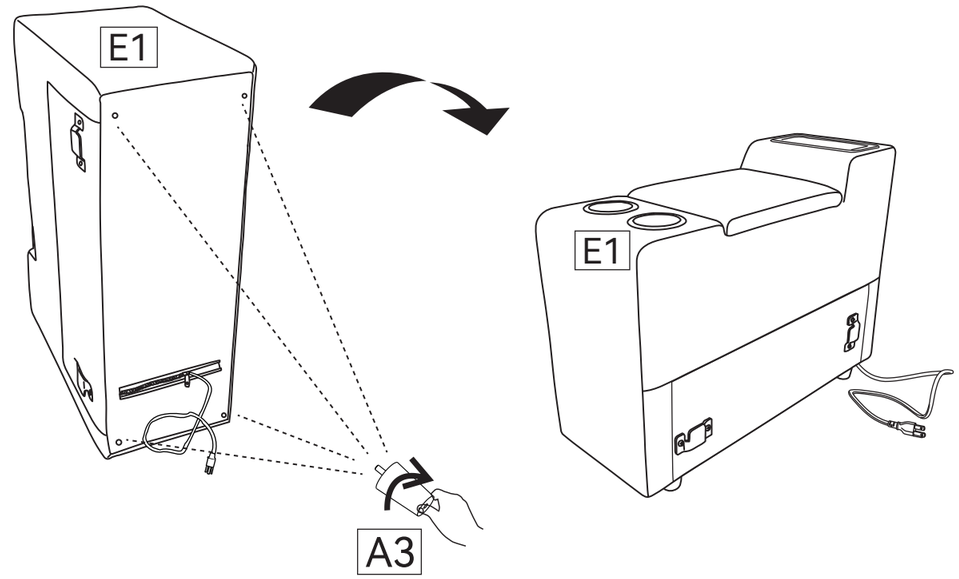

① Remove Part A3 ×4 and Part E2 ×1 from the bottom of Part E1.
② Align Part A3 with the corresponding holes on Part E1, then tighten securely.

Email : **service@grandtunnel.com**

Step 2

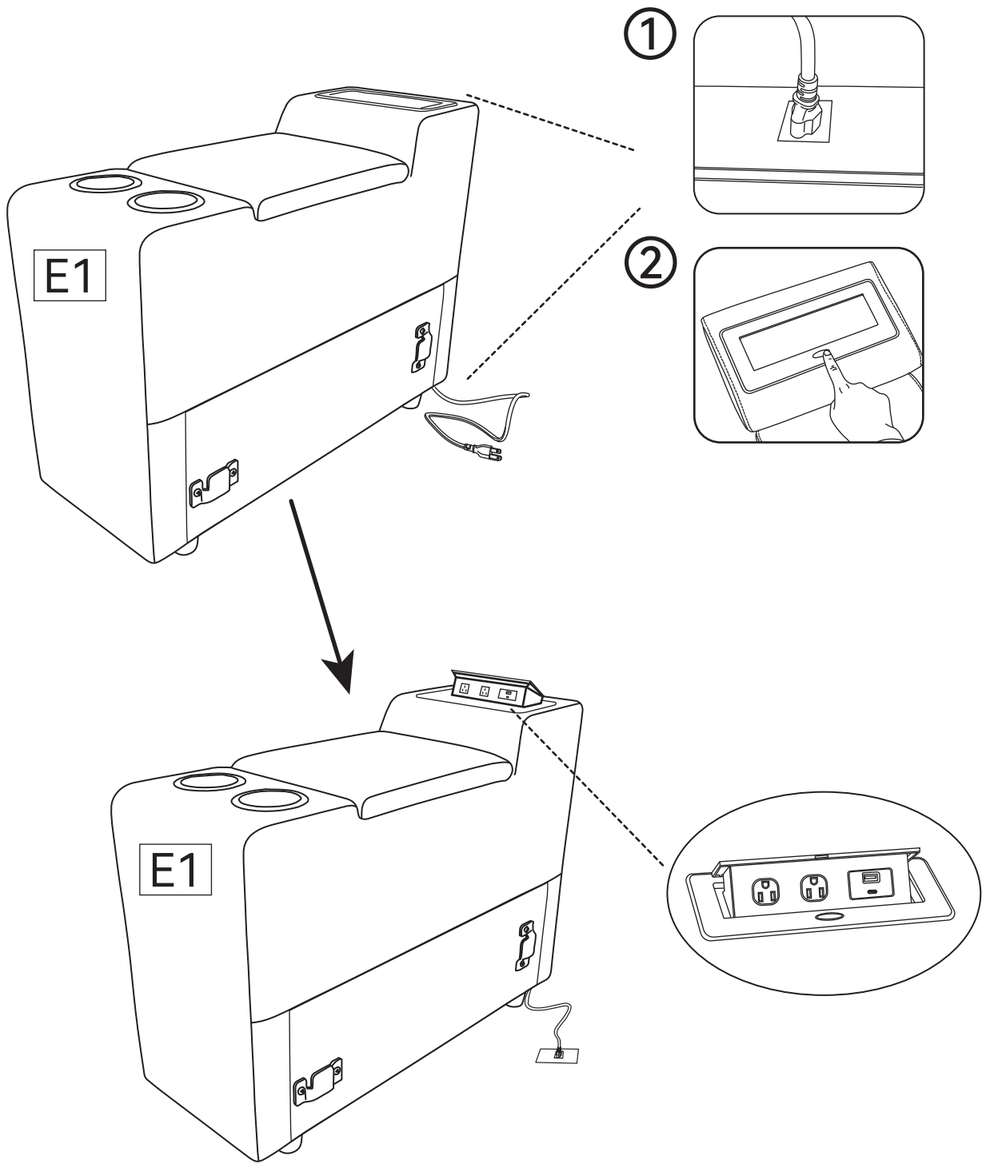

① Connect the power cord at the bottom of Part E1 to a power outlet.
② Press the button on the console to turn on the power outlet.

Email : **service@grandtunnel.com**

Large L-Shaped 5-Seater (2 Power Recliner End Seats)

Configuration 1
BOX Ax1
BOX Bx1
BOX Cx2
BOX Dx1
BOX E x1
BOX F x1

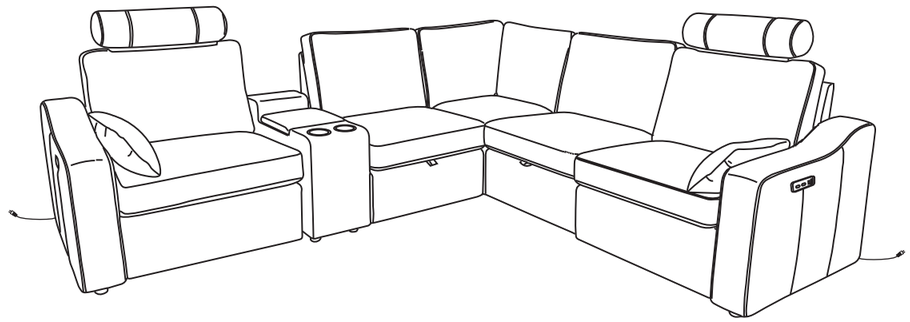

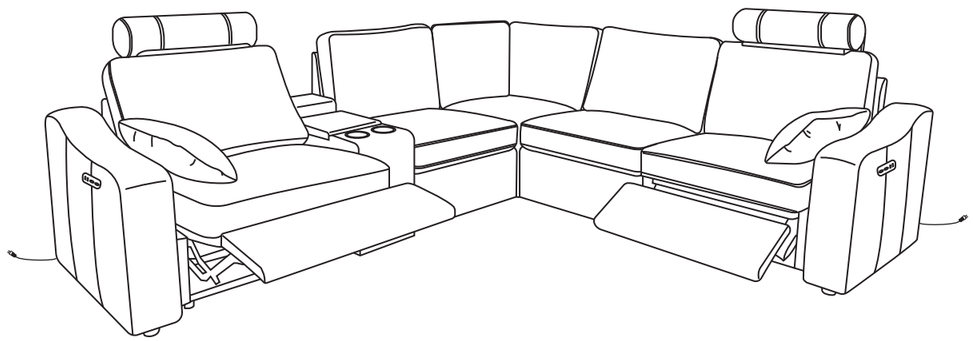

Total 7 cartons

Email : **service@grandtunnel.com**

EN

Left Power Recliner + Console

Starting with the left power recliner section, connect each module from left to right.
Align the next module with the previous section. Insert the rear mounting bracket horizontally into the corresponding slot. Then slightly lift the front of the module and press it downward until the front connector locks securely into place. Repeat these steps for each remaining module.

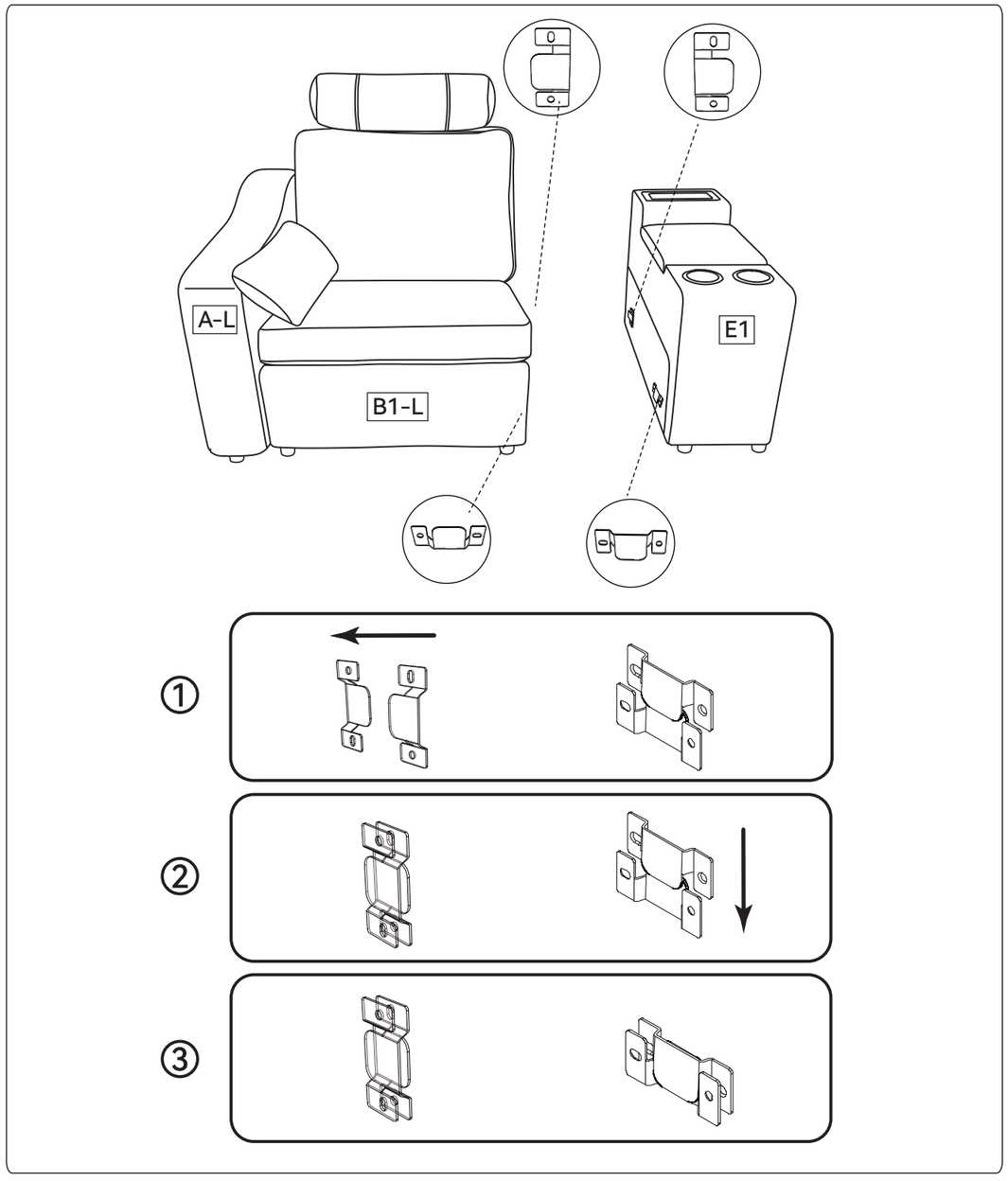

Email : **service@grandtunnel.com**

Left Power Recliner + Console + Non-Power Middle Seat

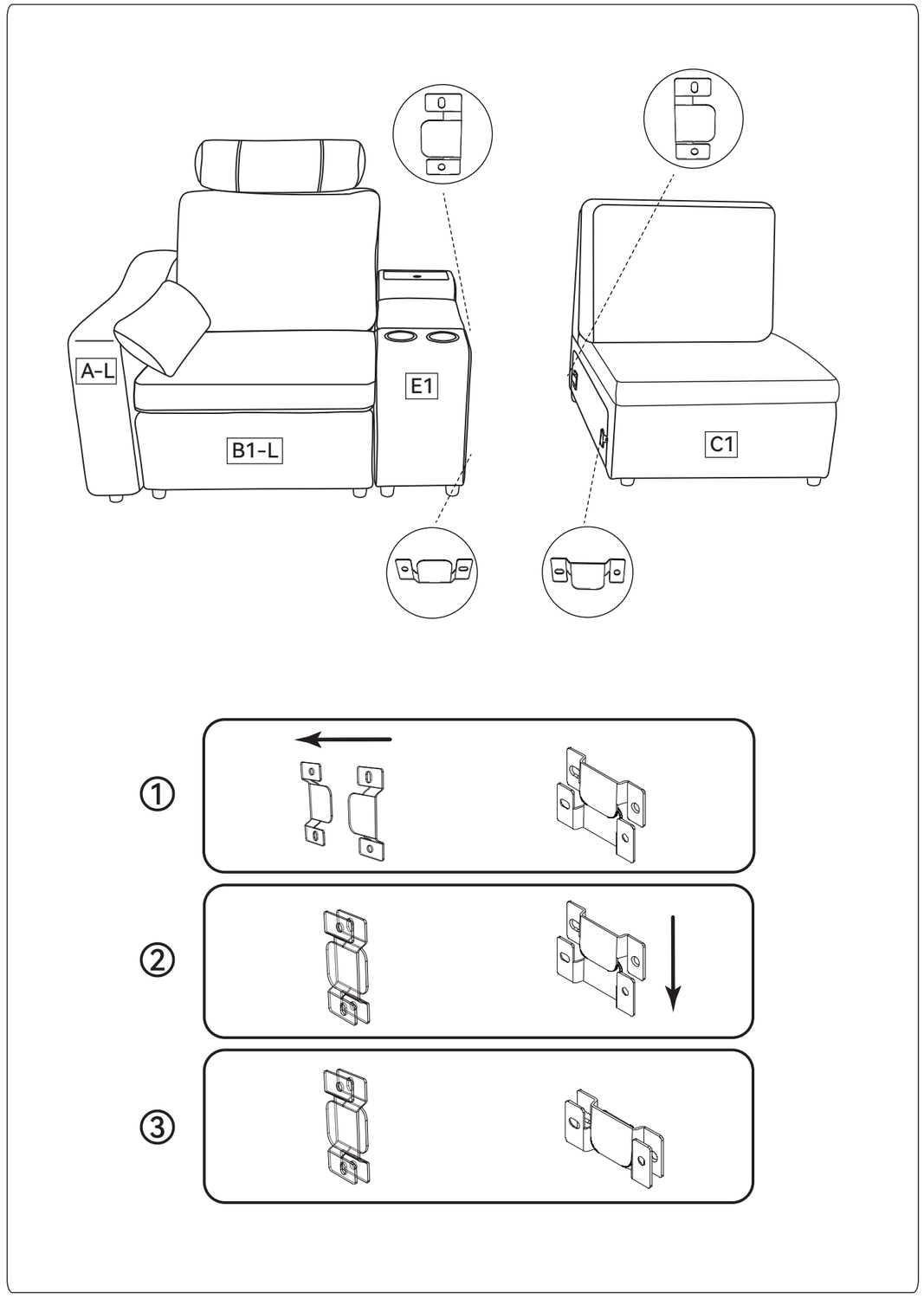

Email : **service@grandtunnel.com**

EN

Left Power Recliner + Console + Non-Power Middle Seat + Corner Seat

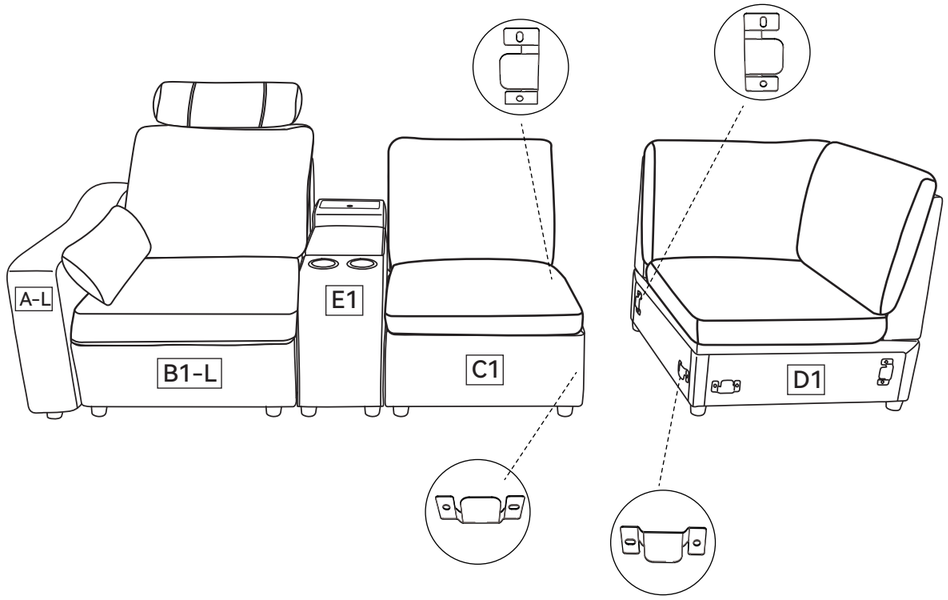

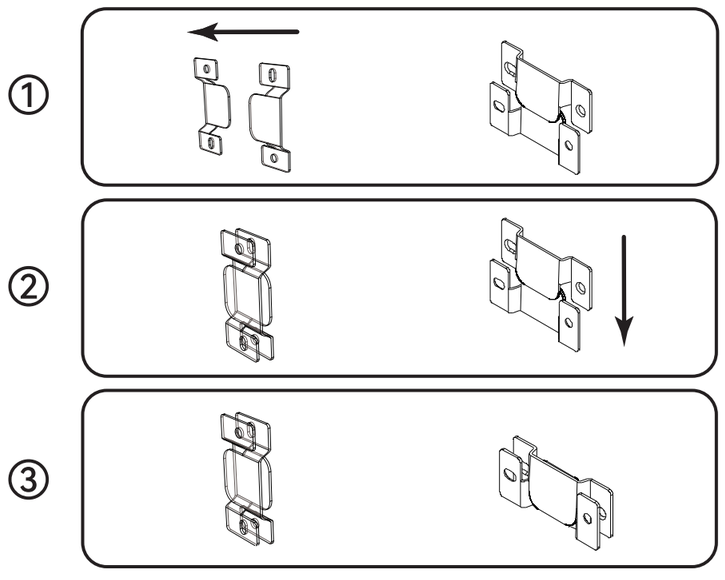

Email : **service@grandtunnel.com**

EN

Left Power Recliner + Console + Non-Power Middle Seat + Corner Seat + Non-Power Middle Seat

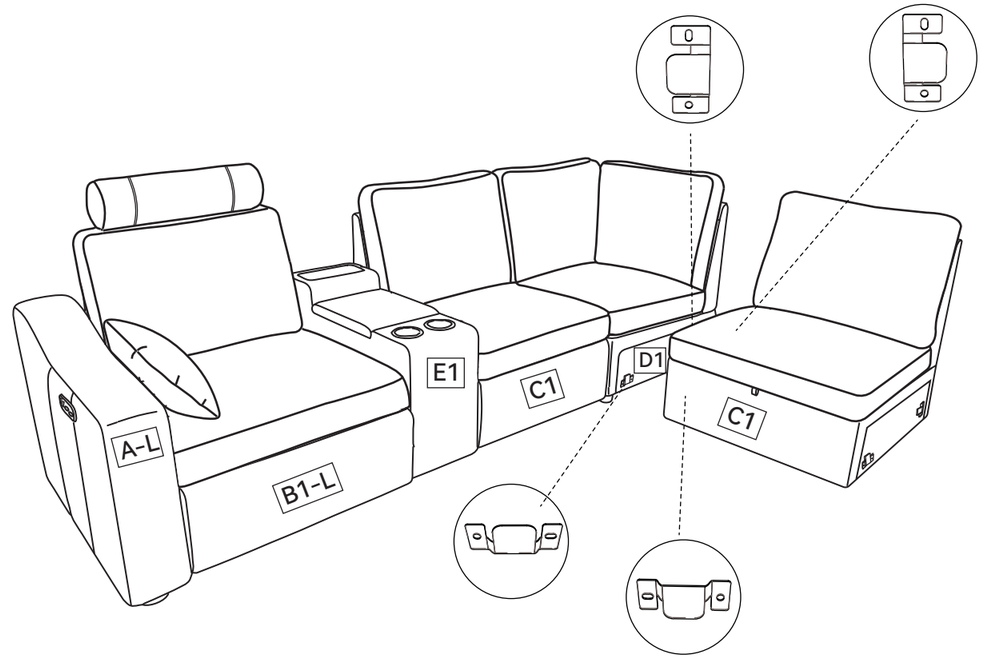

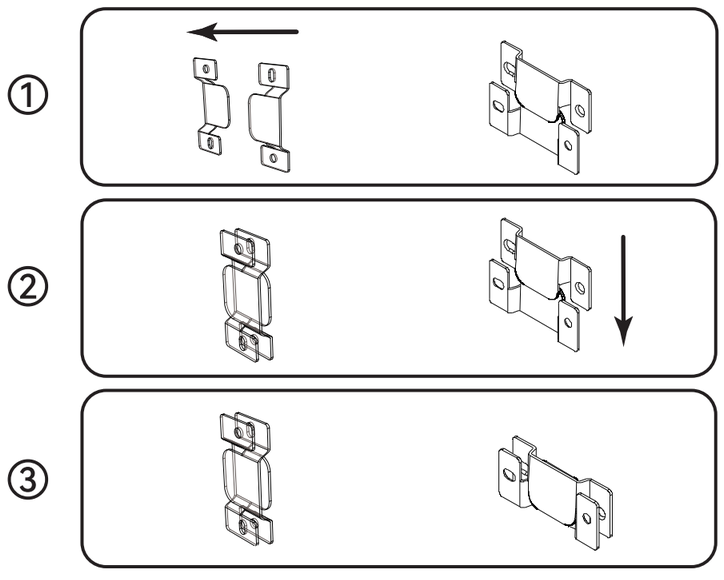

Email : **service@grandtunnel.com**

Left Power Recliner + Console + Non-Power Middle Seat + Corner Seat + Non-Power Middle Seat + Right Power Recliner

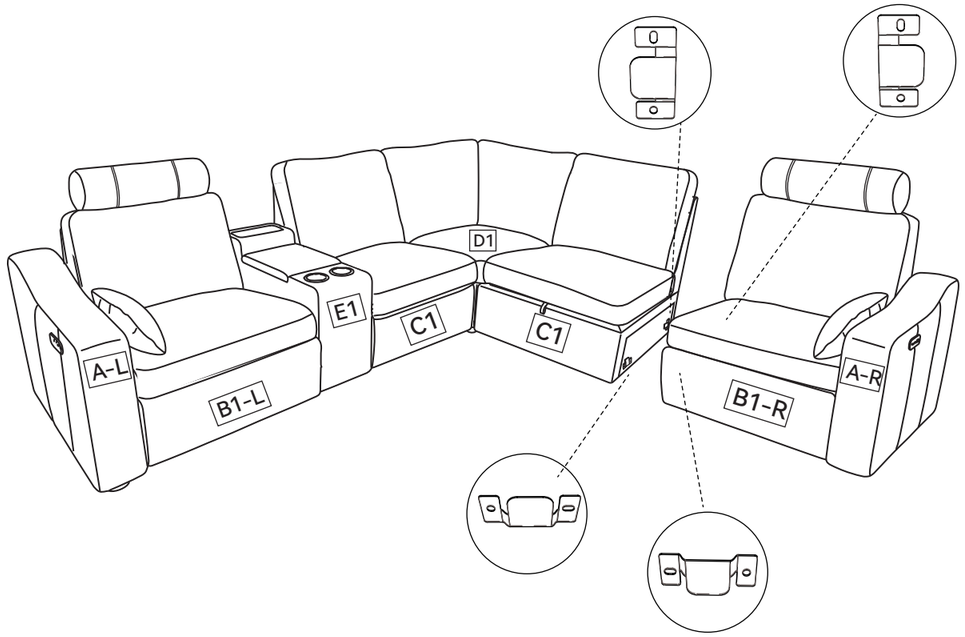

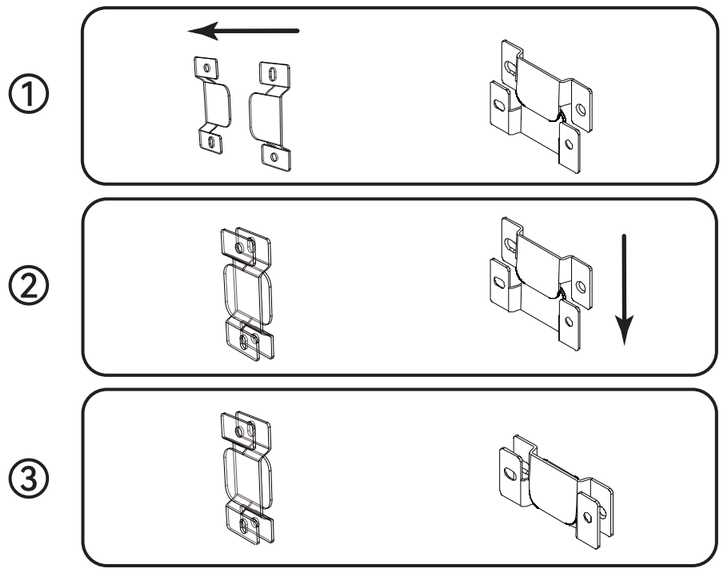

Email : **service@grandtunnel.com**

Overall View

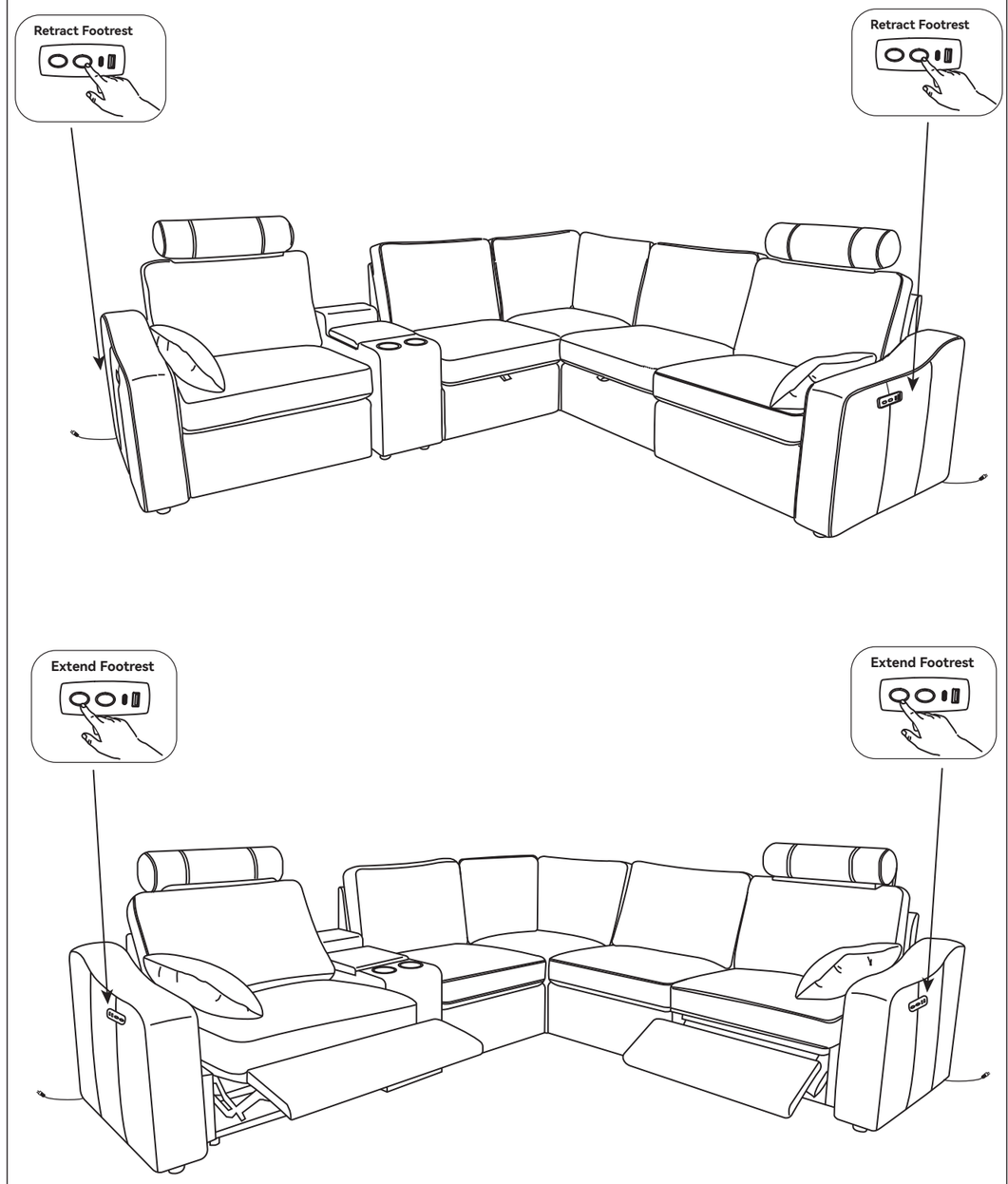

Email : **service@grandtunnel.com**

EN

Maintenance

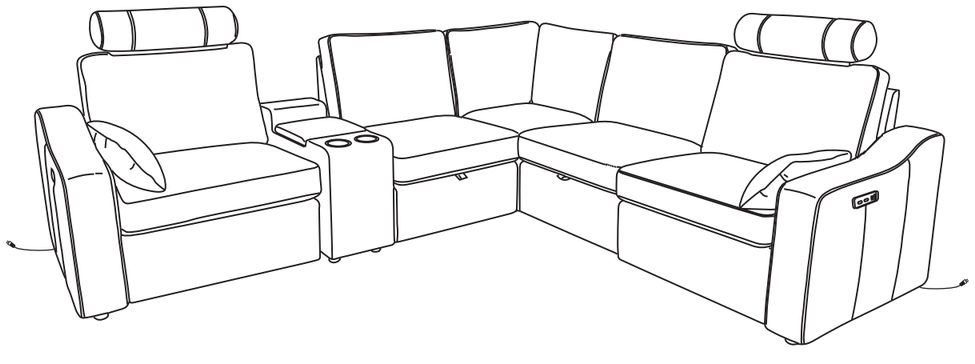

1. Avoid direct sunlight, preferably placed in a place that can avoid sunlight, or use translucent tulle curtains to block the sun.
2. Vacuum at least once a week, paying particular attention to removing dust accumulation between fabric structures.
3. Sofa cushions are turned over once a week to evenly distribute wear.
4. If stained, use a clean cloth dipped in water to wipe. In order to avoid leaving marks, it is best to wipe from the periphery of the stain. Velvet furniture should not be dipped in water and should use a dry cleaning agent.
5. All cloth covers and bushings should be dry-cleaned, not washed, not bleached.
6. If you find loose thread, do not tear it with your hand; it is best to cut the thread neatly with scissors.

Email : **service@grandtunnel.com**

More combinations

Dual Power Recliner (Without Headrests)
Components:
BoxA x1
BoxB x1

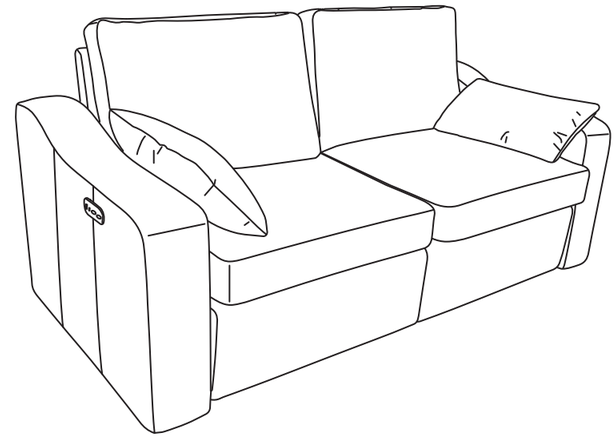

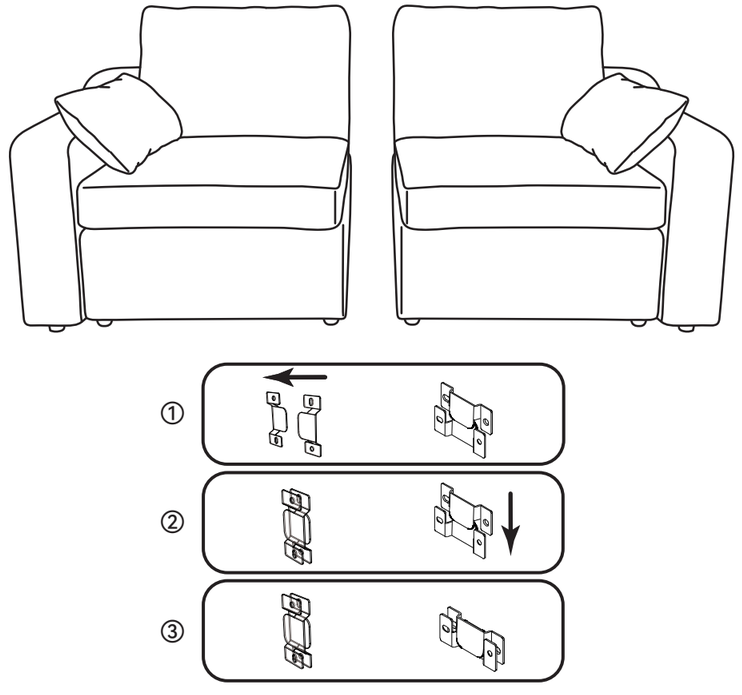

Left Power Recliner + Right Power Recliner

Email : **service@grandtunnel.com**

EN

Sofa function display

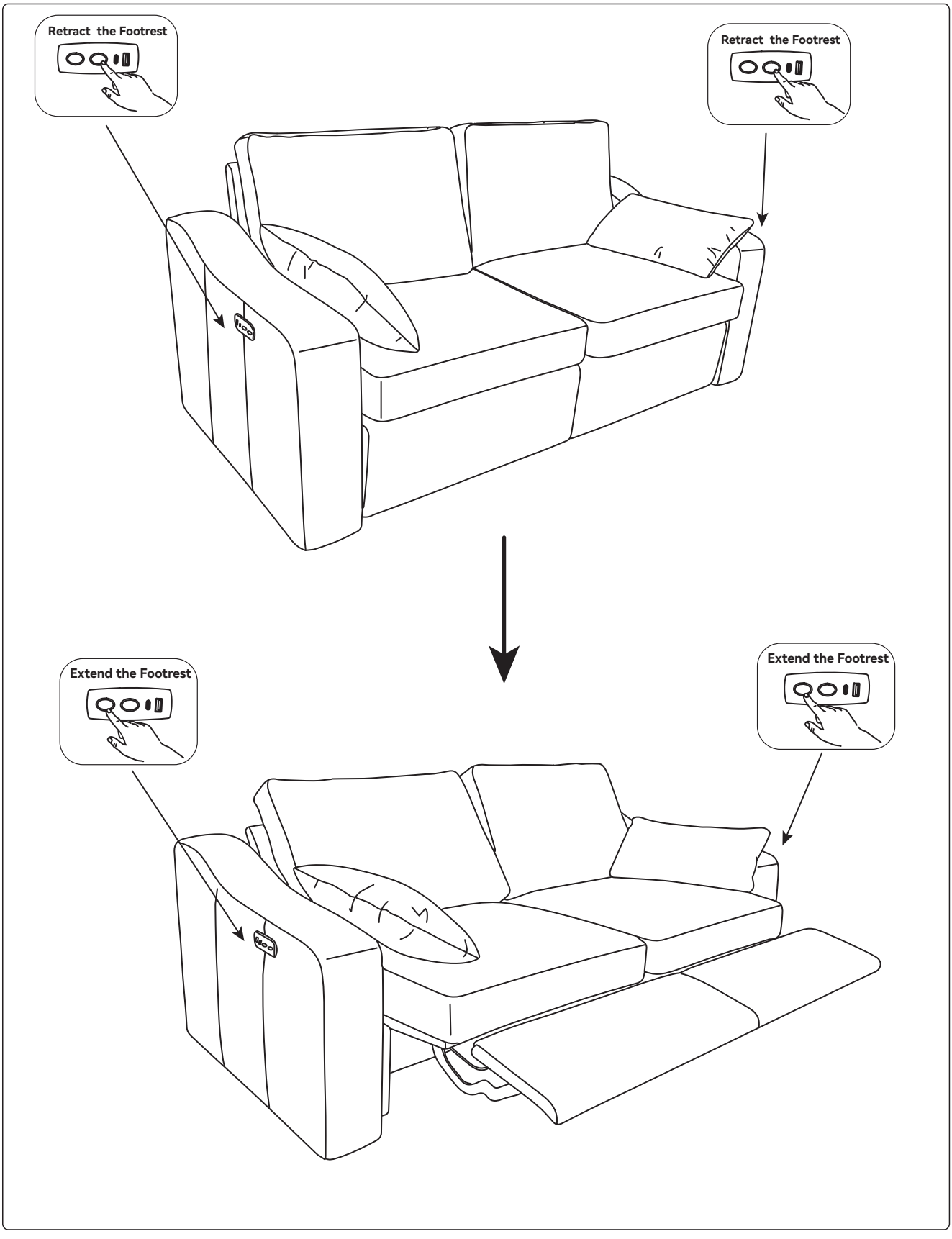

Left Power Recliner + Right Power Recliner

Email : **service@grandtunnel.com**