ASSEMBLY INSTRUCTION



Note:

-The product is made of natural wood, there may be natural defects such as scars and cracks on the surface, please understand.

-Slight variations in color between the product image and the actual item may occur. This is a normal characteristic of photography and screen display technology.

-This assembly manual is applicable to products of different sizes and colors.

-If you have any questions about this product, please contact us in time. We are more than happy to help you .

COMPONENT LIST

Please check and ensure that the following parts are in the package.



A ×1



B ×1



C ×1



D ×4



E ×1



F ×7



G ×7



H ×8



I ×4



J ×1



K ×1

ASSEMBLY STEPS

Please install it on a soft blanket to prevent scratching the surface.

01 STEP Connecting parts A B C.

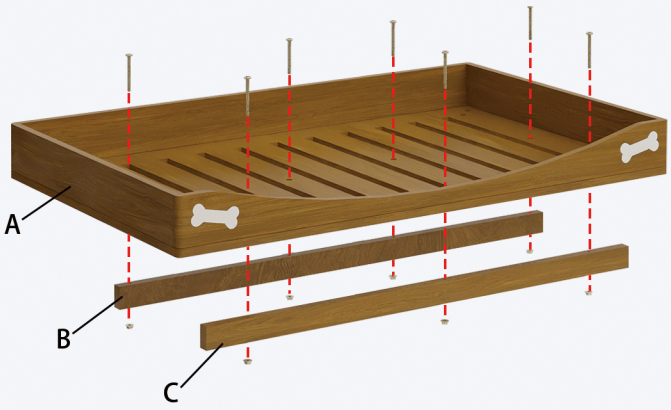

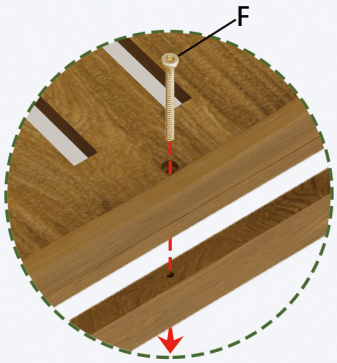

Insert the long screws through the pre-drilled holes.

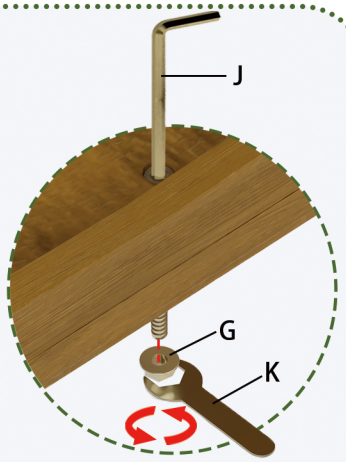

Hold the screw in place with wrench J, then tighten the nut G with wrench K.

02 STEP Connecting parts A D.

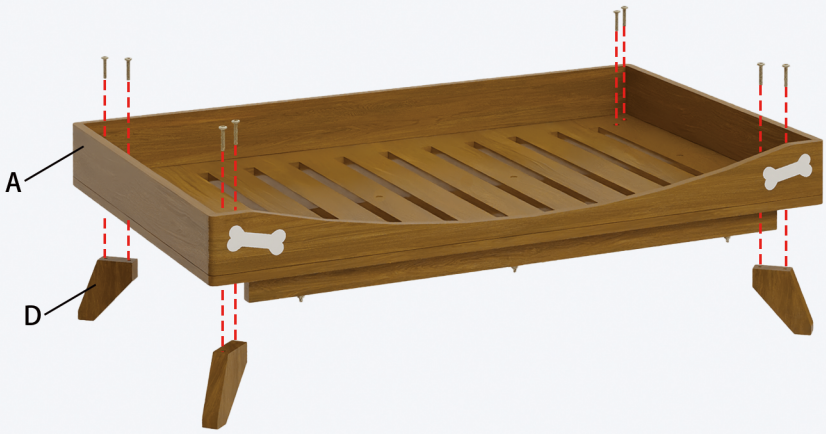

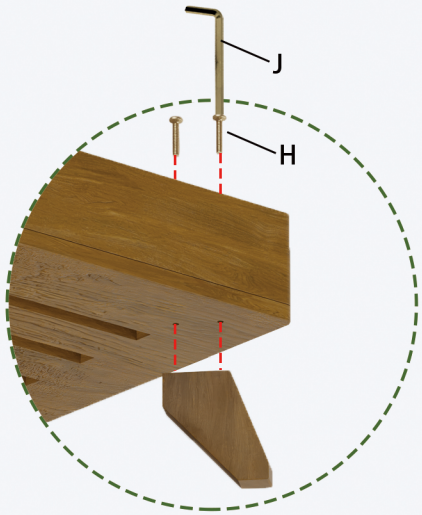

03 STEP Glue on the foot mats.

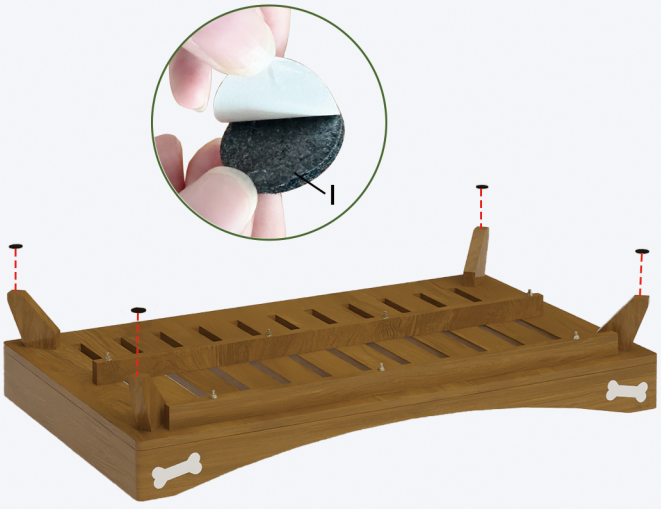

04 STEP Place the cushion into the bed frame.

