VEVOR

Upgrade · The Home Creator Way

Maple Syrup Evaporator Pan

Maple Syrup Finishing Kettle

Model:ZFQ-13G/ZFQ-26.2G-T/ZFQ-14.5G-TB/ZFQ-26.2G-TB/
ZFQ-35G-TB/ZFQ-R6.5G-T

VEVOR | Upgrade
The Home Creator Way

Model:ZFQ-13G/ZFQ-26.2G-T/ZFQ-14.5G-TB/ZFQ-26.2G-TB/
XDO-13E-R@XDO-P4,3E-R

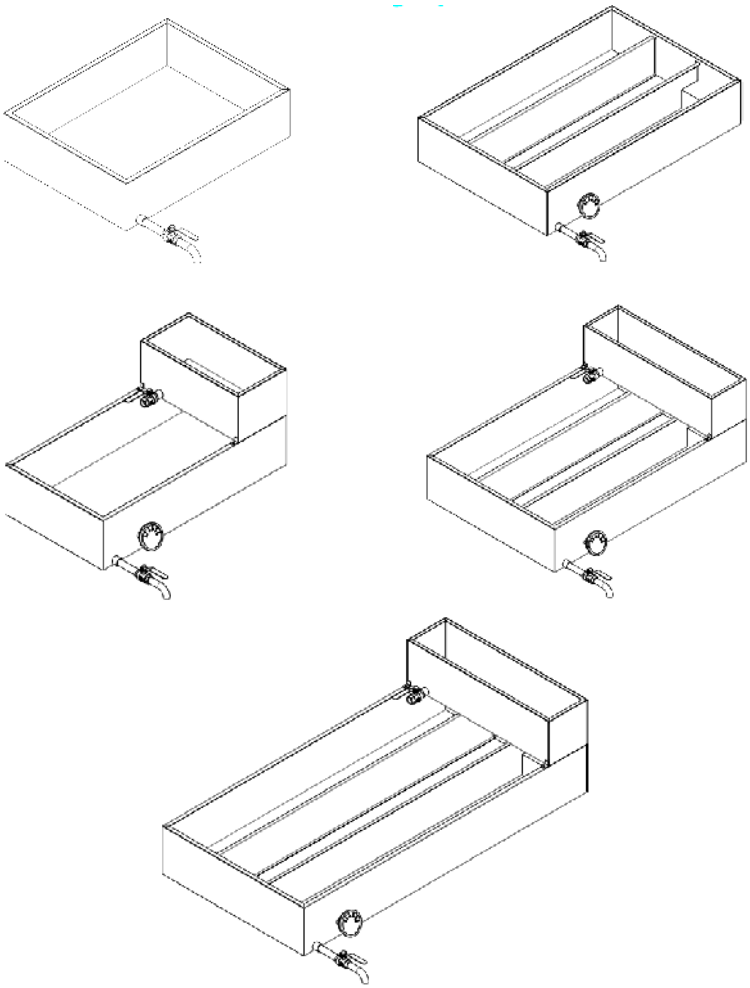

K_njc Qwpsn Ct_nmp_rmpN_l

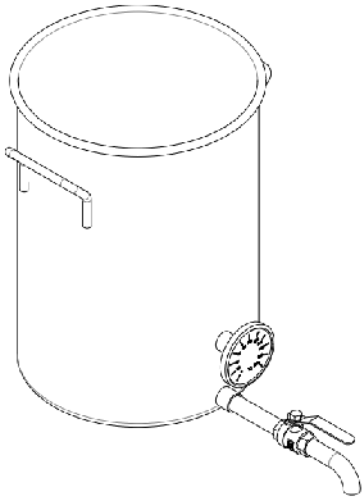

K_njc Qwpsn Dglgqfglelcrrjc

Rfgqlgqlrfcmpgegl_jglqrpsargml*njc_qcpc_b_jjk_lsjglqrpsargmlqa_pcdsjjw`cdmpcmncp_rgle, TCTMPpcqcptcq_ajc_pglrcpnpcr_rgml mdmspsqcpk_lsj,Rfc_nnc_p_lacmdrfcnpmbsarqf_jj`cqs`hcarrmrfcnpmbsarwmspcacglcb,Njc_qcdmpeglcsqrf_rucumlÜglchmpk wms_e_gl gdrfcpc_pc_lwrcaflmjmewmpqmdu_pcsnb_rcqml mspnpmbsar,

IMPORTANT SAFEGUARDS

	WARNING: To reduce the risk of injury, be sure to read this manual carefully.
	Food Contact Safe

1. Safety Instructions

U?PLGLE – Rmpcbsac rf c pggi md` spl q*qngjj_ec*npmncprwb_k _ec*mp ncpqml _j gj hspw8

//, Rf gq gq _l ml -cjcarpga k _njc qwpsn ct _nmp_rmpn_l 9bml mr aml l car gr rm_l w nmu cpqmspac,

0,0, Rf gq npmbsar k sqr ` c sqcb u grf _l cvrcpl _j f c_r qmspac rf _r amk njgcq u grf jma_j pcesj_rgml q, Mncp_rc msrbmmpq mpdg _u cjj-t cl rgj_rcb _pc_ ml jw* _u _wdpmk dj_k k _` jc _l b cvnjmqdg c k _rcpg jq,

1,1, Nj_ac rf c sl gr ml _ dj_r*qr_ ` jc*f c_r-pccqgqr_l r qspd_ac rf _r qsnnmprq rf c amk ` gj cb u cgef r mdrf c sl gr _l b grq aml rcl rq,

2, L ct cpjc_t c rf c sl gr sl _rrcl bcb u f gjc f c_rgj e, Dj_k cq k sqr l mr cvrcl b l mrgac_` jw` cwml b rf c cbec mdrf c n_l ` _qc, U f cl rf c jgpsdp jct cj _nnpm_af cq rf c k gj dk sk *_bb k mpc q_n mppcbsac-qf sr mdrf c f c_r gk k cbg_rcjwrmnpct cl r ` mgj-bpw* qampaf gj e*mp ` mgj-mt cp,

3, Bml mr mt cpdgj 9f mr jgpsdp k _wmt cpdjmu _l b qnj_qf ,

4, Qspd_acq _pc cvrpck cjwf mr bspdj e mncp_rgml _l b qr_wf mr _drcpqf srbmu l ,

?t mdp bgpcar aml r_ar9_ju _wq u c_pf c_r-pccqgqr_l r ejmt cq u f cl f _l bjdj e,

5, L ct cpk mt c rf c sl gr u f gjc gr aml r_gj q f mr jgpsdp mp ` cdmpc gr f _q dsjjwammjcb,

6, I ccn af gjbpcl _l b ncrq _u _wbspdj e mncp_rgml _l b sl rgj rf c sl gr f _q amk njcrcjwammjcb,

7, Sqc rf gq sl gr ml jwrmct _nmp_rc jgpsdpq _nnpmt cb ` wrf c k _l sd_arspcp9bm

l mr sqc gr dmp_l wmrf cpnspnmqc,
/ . , Gdrf c n_l gq ap_ai cb*b_k _ecb*mpjc_i gle*qrmn sqgle gr gk k cbg_rcjw_l b
am r_ar rf c k _l sd_arspcpdmppcn_gpmppcnj_ack cl r,
/ / , Bml mr k mbgdwmppcn_gprf c sl gr u grf mr sr_srf mpgx_rgm 9sl _srf mpgxcb
_jrcp_rgm a_l a_sqc qrps arsp_j b_k _ec _l b q_dcrwf _x_pbq,
/ 0, Dmjjmu _jj l _rgm _j _l b jma_j pcesj_rgm q dmpdlqr_jj_rgm *sqc*_l b bgqnmq_j
mdrf c sl gr,
/ 1, Rf gq npmbs ar gq l mr _rmw, Bml mr _jjmu af gjbpcl rmnj_wu grf gr,

2. Disclaimer
Pc_b rf gq k _l s_j a_pcds jjw_l b mncp_rc _l b k _gl r_gl rf c sl gr npmncpjwrm
cl qspc jml e-rcpk *pcjg_`jc ncpdmpk _l ac,
TCTMP _qqsk cq l mjg_`gjgwsl bcprf c dmjjmu gle agpask qr_l acq8
/ ,D_gjspc rmmncp_rc rf c sl gr _q gl qrps arcb gl rf gq k _l s_j9
0, Gk npmncpqrmp_ec mpajc_l gle mdrf c sl gr9
1, B_k _ec a_sqcb`wrf c sqcp,
2, Sl _srf mpgxcb k mbgda_rgm mdrf c sl gr mppcn_gpu grf l ml -mpgegl _j n_prq9
3, Sqc`cwml b rf c sl gr Gl p_rcb mncp_rgle aml bggml q mpdlrcl bcb _nnjga_rgm q,

3. Product Overview
Npmbs ar Dsl argm l q
Rf gq k _njc qwpsn ct _nmp_rmpn_l gq bcqgel cb rm`mgj_l b aml acl rp_rc k _njc
q_n*_l b a_l `c n_gpcb u grf _dljrcpi gr rmpck mt c gk nspggcq, Gggq_t _gj_`jc gl
dmspqrwjcq8qr_l b_pb ct _nmp_rmpn_l *aml rgl sms q-`mgj n_l *n_l u grf
npcf c_rgle af _l l cj*_l b dlggrf gle i crrjc8
Rf c qr_l b_pb ct _nmp_rmpn_l dc_rspcq_qgk njc bcqgel _l b gq c_qwrmajc_l 9
Rf c aml rgl sms q-`mgj n_l k _gl r_gl q_qrc_bwjgpsgb jct cj dmpsl gl rcpps nrcb
`mgjgle9
Rf c npcf c_rgle-af _l l cj qrwjc npc-u _pk q rf c q_n rm`mmqr mt cp_jj ct _nmp_rgml
cdbagcl aw9
Rf c dlggrf gle i crrjc gq gbc_j dmprf c dlj_j dlggrf gle qr_ec*k _igle gr c_qgcprm
aml rpmj qse_pbcl qgwu f gjc pcbs agle rf c pgqi mdqse_pq_l b _l b qampaf gle,
Qwpsn u mpi qjmu 8q_n &npc-djrcp `mgj_l b aml acl rp_rc gl rf c ct _nmp_rmpn_l

dlgqf dl rf c dlgqf dl e i crrjc _q l ccbcb9mp` mgj bgpcarjwrmdlgqf cb qwpsn
Rf c u dpc n_l qspd_ac bpgl cq mdlq_n k mqqrspc osgai jw, Rf c cl rgpc sl gr gq` sgjr
dpmk dmmb-ep_bc 1. 2 qr_dl jcqq qrccj—ampppmqgml -pccqgqr_l r _l b c_qwrm
bgq_qqck ` jc _l b ajc_l ,
L mrc8Rf gq sl gr ` mgjq _l b aml acl rp_rcq k _njc q_n, U f cl ` mgjdl e bmu l rm
dlgqf cb qwpsn*k ml gmpqse_pbcl qgw_l b rck ncp_rspc ajmqcjwrmnpct cl r
qampaf dl e,

4. What's in the Box

Part	Qty	Notes
Ct _nmp_rmpn_l ` mbw	/	Qr_l b_pb ml _jj k mbcjq
Bp_dl ` _jj t _jt c _qqck ` jw&ugf NRDC r_nc'	/ qcr	Qr_l b_pb ml _jj k mbcjq
Rf cpk mk crcp	/ qcr	Gsajsbcb u gf qcjcar k mbcjq ml jw9 qs` hcar rmrf c _ars_j npmbsar pcacdl cb
Dgjrcpqsnnmpr rp_w	/ qcr	Dgl gqf dl e i crrjc ml jw
Dgjrcpn_ncpq	0.	Dgl gqf dl e i crrjc ml jw9 aml qsk _` jc—nspaf _qc pcnj_ack cl rq qcn_p_rcjwu f cl sqcb sn
Fwbpmk crcp	/ qcr	Dgl gqf dl e i crrjc ml jw

Note: Rf gq k _l s_j aml cpq k sjrgnjc k mbcjq, Qmk c n_prq _pc dl ajsbcb ml jwu gf qncaqdla k mbcjq9rf c _ars_j npmbsar wms pcacdl c npct _gjq,

5. Specifications

Kmbcj	XDO-/ 1 E	XDO-04, 0E-R	XDO-/ 2, 3E-R@	XDO-04,0 E-R@	XDO-13E -R@	XDO-P4, 3E-R

Bcqapgnrgml	Dj_r n_l	Bglgbcb n_l	Dj_r n_l	Bglgbcb n_l	Bglgbcb n_l	Dglgnf gl e i crrjc
Mt cp_jj Bgk cl qgml q	02 □/6 □4	14 □02 □ 5	1. □/4 □ 5	14 □02 □ 5	26 □02 □ 5	/□3 □ F/6,7
@_dljc	Lm	Wtcq	Lm	Wtcq	Wtcq	Lm
Rf cpk mk cr cp	Lm	K_njc rf cpk mk crcp	K_njc rf cpk m k crcp	K_njc rf cpk mk crcp	K_njc rf cpk mk crcp	@mrjgl e rf cpk mk crcp
Dmmb-Ep_bc 1. 2 Qr_gl jcqq Qrccj	Wtcq	Wtcq	Wtcq	Wtcq	Wtcq	Wtcq
K_v Rf cmpcrga_j A_n_agw &k c_qspcb dsjj md u_rcp'	//,0 e_j	04,0 e_j	/2,3 e_j	04,0 e_j	12,7 e_j	/2,1 e_j
Pcamk k cl bcb Umpi gl e A_n_agw &0-gl af bcnrf '	1,5 e_j	5,3 e_j	2 e_j	5,3 e_j	/. e_j	L-?
Ct_nmp_rgml P_rc &e_j md q_n-f p'	0 - 2,3)	4 - 7)	1 - 3)	4 - 7)	7 - /0)	/ - 0
?t e, Qsgl_`jc K_njc R_nf mjcq	/ - /3	3 – 3.	/ - 0.	3 – 3.	/. - 53	/ - /.

Notes:

/,Ct _nmp_rgml p_rc gq e_jjml q mdq_n ct _nmp_rcb ncpf mspsl bcpqr_l b_pb
aml bggml q9_ars_j ncpdmpk _l ac t _pgcq u grf q_n qse_paml rcl r*f c_r dj nsr*_l b
_k ` gcl r rck ncp_rspc,
0,Rf c _t cp_ec l sk ` cpmdqsgr_` jc r_nf mjcq gq dmppcdcpcl ac ml jw,
1,K mbcj XDO-P4,3E-R gq _ dj gqrf dj e i crrjc dmpdj _j qwpsn aml acl rp_rgml _l b
` mrrjdj e9gr gq l mr _ npgk _pwq_n ct _nmp_rmp,

6. Installation

	Gqr_jjdj e rf c Bp_dj T_jt c ?qqck ` jw /, U p_n _l ct cl j_wcpmdNRDC r_nc ajmai u gqc _pmsl b rf c k _jc rf pc_bq mdrf c cvrcl qgml ngnc _l b rf c 7. " cj` mu 9 0, Rf pc_b rf c cvrcl qgml ngnc dj rmrf c ` _jj t _jt c9 1, Rf pc_b rf c 7. " cj` mu dj rmrf c t _jt c msrjcr9 _blsqr rf c cj` mu _l ejc qmrf c msrjcr d_acq bmu l ` cdmpc rgef rcl dj e,
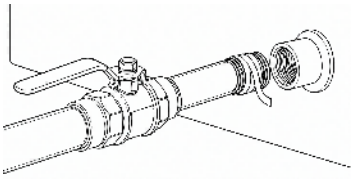	Rgn8Rf gq qrcn gq l ccbcb ml jwu f cl pc-dj qr_jjdj e _drcpbgq_qqck ` jw9rf c sl gr qf gnq npc-_qqck ` jcb, Rf pc_bdj e rf c Bp_dj T_jt c dj rmrf c Sl gr ?blsqr rf c cj` mu _l ejc qmrf c msrjcr d_acq bmu l ` cdmpc rgef rcl dj e
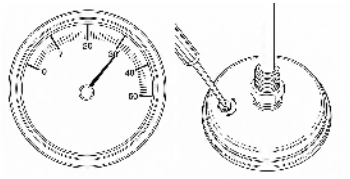	Gajsbcb u grf qcjcar k mbcjq ml jw9qi gn rf gq qrcn gdwmspsl gr f _q l m. -3. k _njc rf cpk mk crcp A_jdj p_rdj e rf c . -3. K_njc Rf cpk mk crcp- /, Dgjj rf c n_l u grf r_n u _rcprm_ bcnrf md_r jc_qr 2 dj af cq _l b ` pdj e gr rm_` mgj,

	0, Uc_pdje npmrcardjc ejmtcq*dk k cpqc mljw rfc npm`c qrck 9iccn rfc bgj_lb rfc a_jg`p_rgml qapcu ml rfc`_ai _`mtc rfc u_rcp, Rfc u_rcpk sqramtcp_rjc_qr rfc bgk njc ml rfc qrck *_lb rfc npm`c k sqrl mr rmsaf rfc n_l`mrmk, 1, ?dcpml c dsjj pmr_rgml *rfc l ccbjc qf msjb pcqr_r . , Gdgrbmcq l mr*_bhsqr rfc a_jg`p_rgml qapcu ml rfc`_ai ugf _dj_rfc_b qapcu bpdjcp, 2, ?dcp_bhsqrdje*pc-dk k cpqc dj `mgjdje u_rcprmtcpgdwrfc a_jg`p_rgml,
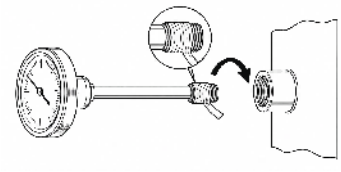	GEajsbcb ugf qcjcark mbcjq mljw9qign rfgq, qrcn gdlwmspsl grf _q l mrfcpk mk crcp Up_n_l ctcl j_wcpmdNRDC r_nc ajmai ugqc _pmsl b rfc rfcpk mk crcprf pc_bq Rf pc_b rfc rfcpk mk crcpdj rmrfc sl gr9pmr_rc rfc bgj rm_amtcl gcl r pc_bdje_l ejc`cdmpc rgefrcl dje
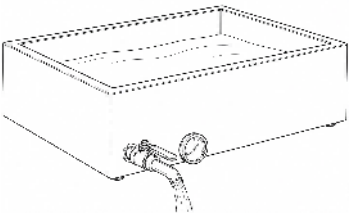	Amjb-u_rcpjc_i rcqr8_dcp_jj dgrrdjeq_pc _qqck`jcb_lb`cdmpc f c_rdje*dgjrf c sl gr ugf amjb u_rcp, Mncl _jj t_jtcq_l b af cai ctcpwrf pc_bcb hmdjr dmpjc_i q, ⚠ U?PL GE8Gdjc_i q_pc dhsl b*bp_dj rfc sl gr*pc-up_n rfc hmdjr ugf NRDC r_nc*_lb pc_qqck`jc

Assembly Precautions

/, Bml mrjcr NRDC r_nc amtcprf c ngnc mncl dje mprf c msrcpk mqr rf pc_b9r_nc cl rcpdje rf c jdjc a_l dk n_gprf pc_b cl e_eck cl r mpa_sqc`jmai _ecq9
0, F_lb-rgefrcl c_af rf pc_bcb hmdjr sl rgjql se*rf cl rgefrcl ml jwqjgefrjw dsprf cp, Mtcp-rgefrcl dje b_k _ecq rf pc_bq_l b a_sqcq ap_ai cb*jc_i dje hmdjrq9 l ctcpf c_r rf c sl gr uf gjc_hmdjr gp, jc_i dje,

7. Operation

⚠ @qcdmpcc c_af sqc*amlqgk 8_jj qgrqjeq _pc qjqr_jjcb*rfc amjb-u_rcpjc_i rcqr f_q `ccl amk njcrcb ugf l mjc_iq* _lb rfc slgr qgqq ml _ jctcj* qr_`jc* fc_r-pcqgqr_lrqspq_ac,

一,Npc-Sqc Afcaiq

/,Tcpqgwrf _rlmrfpc_bcbhmqjrjc_iq9

0,Tcpqgwrf _r_jj`_jjt_jtcqmncl _lbajmqcqk mmrfjw9

1,Gqncarrfcn_l ohpap_aiqmpb_k _ec,

二. Cqqclrg_j@mqjqjeEsqbcjqjcq

/,Jctcj rfc ct_nmp_rmpqmrfc jqpsqp bcnrf qp ctcl _apmqq rfc n_l*_tmqbqjef _lbjmu qnmrq,

0,Dqjj ugf q_nrm_ 0-qjaf bcnrf, Bspqjemncp_rgml*lctcpjcr rfc jctcj bpmm `cjmu / qjaf9ufcl gr lc_pq rfc jqk g*_bb q_n mppcbsac-qfsr mqbrfc fc_r qk k cbg_rcjwrmnpctcl r`mqj-bpw_lbqampafqje,

1,Ufw0 qjafcq8rfgp bcnrf bqgrmqgsrcq fc_r ctcl jw*npctcl rq qampafqje*_lb jc_tcq pmmk ohpdm_k cvn_lqgml*pcbsaqje`mqj-mtcppqgi,? jmucpjctcj apc_rcq bpwfmrqnmrq rf_r`spl rfc qwpsn ml rmrfc n_l,

2,@mqjqje nmqjr t_pqcq ugf _jrqsbc _lb npcqqspc8qwpsn qjqgf rck ncp_rspc; wmspjma_jk c_qspcbu_rcp`mqjqje nmqjr) 5“D,

3,Npmncpjwqjqgf cb k _njc qwpsn k c_qspcq 44–45“@qqv9pcjwml _fwbpmk crcp ohprfc qj_ja_jj—rfc rfcpk mk crcpgp_pcdcpcl ac mljw,

4,K_jr_qj _qrc_bwpmjjqje`mqj,Dm_k `sqjbq lc_prfc qjqgf9sqc_rqjw_k msl r mqdohmb-ep_bc bcdm_k cpmp/–0 bpmmq mqdl csrp_jtcecr_`jc mqj—sqc _q jgrrjc _q nmqqg`jc*qqjac cvacqq _qdcarq qj_tmp,

5,Ml ac r_pecr bcl qgrwgp pc_afcb*rspl mqbrfc fc_r _lbjcr rfc qwpsn qgr _ qbu k qjsrcq ohpqse_pq_lbrmqcrrjc`cohpc qjrcpqje,

6,Fmr-n_ai rfc qwpsn _r/6.–/7.“D,

⚠ Q_qbrwpck qjbcp8lctcp psl rfc n_l bpw9_tmqb npmjmlecb mtcp-`mqjqje* ufgaf qampafcq rfc qwpsn _lbapc_rcq mqbqj_tmpq,

8. Care & Maintenance

⚠ Jcr rf c sl gr amm j amk njcrcjw` cdmpc ajc_l dg e rmnpct cl r` spl q,
/,Ajc_l npmk nrjw_dcpc_af sqc rmpck mt c qwpsn _l b qse_pq_l b pcqdpsc
` cdmpc gr f _pbcl q _l b a_p_k cjgxcq,
0,Pdg qc u gf f mr u _rcpdgpqr9mpbdg _pwqm_n _l b bgqf bcrcpecl r _pc l mr
pcamk k cl bcb* _q pcqdpsc _dbcarq k _njc qwpsn dg_t mp, Dmpqrs` ` mpl qampaf cb
pcqdpsc* dgj rf c n_l u gf _/8 k gy mdu f gc t dg ce_p_l b f mr u _rcp_l b qm_i dmp
l mjm l ecprf _l 02 f ms pq* rf cl pdg qc rf mpmsef jwu gf ajc_l u _rcp, ⚠ L ct cp
jc_t c _adpga qmjsrgml dg rf c n_l dmpcvrcl bcb ncpgmbq9gr a_l amppmbc qr_dg jcqq
qrccj,
1,Dmpjgef r qspd_ac psqr mpk dg cp_j qnmrq8k _i c _n_qrc md` _i dg e qmb__l b
u _rcp* mpsqc _dmmb-ep_bc qr_dg jcqq qrccj ajc_l cp* _l b u gnc ecl rjwu gf _qmdr
ajmrf _jm l e rf c ep_dg , L ct cp sqc qrccj u mmj mpu gpc ` psqf cq—rf cwqap_raf rf c
n_l _l b jc_t c gpml n_prgajcq rf _r a_sqc pcnc_r psqrdg e,
2,Djsqf rf c ` _jj t _jt c _l b dg rcpl _j jdg cq rf mpmsef jwrmpck mt c qwpsn pcqdpsc
_l b i ccn rf c t _jt c dpmk qrgai dg e,
3,? dcpct cpwu _qf * bpwrf c sl gr amk njcrcjw* dg qdpc _l b msr* rmk dg dk gxc u _rcp
qnmrq _l b qspd_ac psqr,
4,Jm l e-rcpk qrmp_ec8i ccn rf c sl gr dg _ bpw* t cl rgj_rcb nj_ac—bml mr qc_j gr dg 9
jc_t c rf c ` _jj t _jt c qjgef rjwmncl p_rf cprf _l dsjjwajmqcb9npmrcar rf c
rf cpk mk crcpdpmk bsqr,

9. Troubleshooting

Problem	Possible Cause	Solution
Qampaf dg e mp ` spl r qnmrq ml rf c n_l	Sl gr l mr jct cj* jma_j bcnrf ` cjmu / dg af 9dg_k c f grdg e ml c qnmr bgpcarjw9 k gqr_i dg e dm_k dmpjgpsdp jct cj	Jct cj rf c ct _nmp_rmp9_blsqr rf c dg_k c qmgr bmcq l mr bgpcarjwf gr rf c n_l 9i ccn rf c jgpsdp bcnrf _r / dg af mp k mpc—dm_k bmcq l mr amsl r rmu _pb bcnrf

Problem	Possible Cause	Solution
Fc_t wcdm_k * npml c rm `mgj-mt cp	Ggrgg j dgjj rmmf gef 9q_nÜd l _rsp_j dm_k gl e	l ccn rf c gl grg j jgpsgb jct cj qrpgarjw_r 0 gl af cq9sqc _ qk _jj _k msl r mddmmb-ep_bc bcdm_k cpmp/ –0 bpmnq md l csrp_j t cecr_`jc mgj
Rf cpk mk crcp bg_j dmeq sn mpr_i cq ml u _rcp	Bg_j gk k cpqcb gl u _rcpmp cvnmqcb rmf c_t wqrc_k	L ct cpqs`k cpec rf c bg_j9 `spwrf c rf cpk mk crcpgl pgac rmbp_u msr k mgqrspc9pcnj_ac grgdgra_l l mr`c pct gl cb9u _rcp gl rf c bg_j gq l mr amt cpcb `w u _pp_l rw
G_aasp_rc mp hsk ngl e rf cpk mk crcp pc_bgl eq	L m`mgjgl e-u _rcp a_jg`p_rgml 9npm`c rmsafgl e n_l `mrmk 9 npm`c l mr gk k cpqcb bccn cl msef	Pc-a_jg`p_rc gl `mgjgl e u _rcp ncprf c Gqr_jj_rgml qcargml 9 i ccn rf c npm`c mdbrf c `mrmk 9cl qspc rf c npm`c gq u cjj gk k cpqcb9rpsqr rf c f wbpmk crcpdmpbcl qgw
@_jj t _jt c qrgdl mpf _pb rm rspl	Bpgcb qwpsn mpqse_pq_l b gl qgbc rf c t _jt c	Ml ac rf c sl gr ammjcq*gl sqf rf c t _jt c pcnc_rcbjwu grf f mr u _rcprmajc_pqwpsn bcnmqgrq
Jc_i gl e rf pc_bcb hmgl r	L mr cl msef NRDC r_nc9 mt cp-mpsl bcp-rgef rcl cb9 b_k _ecb rf pc_bq	Bp_gl amk njcrcjw*pc-r_nc _l b pc_qqck `jc9qrmn sqgl e rf c sl gr gdrf pc_bq _pc b_k _ecb
U _rcpqnmrq mpjgef r	L mr bpgcb rf mpmsef jw_dcp u _qf gl e9k gl cp_j pcqgbsc	@_i gl e-qmb_n_qrc mp dmmb-ep_bc qr_gl jcqq qrccj

Problem	Possible Cause	Solution
qspcl_ac psqr	cpmk u_rcp	ajc_l cpu gf _ qmnr ajmnf _jml e rf c ep_g 9bpwamk njcrcjw `cdmpc qrmpg e9l ct cpqrmpc b_k n_l b qc_jcb
Cvacqq qse_p q_l b &qcbgk cl r' g cg gpf cb qwpsn	L mqcrrjg e rgk c _dcp pc_af g e bcl qgw9qwpsn f cjb _r cvacqqg c f c_r rmm jml e	Rspl mdlrf c f c_r _r r_pecr bcl qgw_l b jcr rf c qwpsn qcrrjc _ dcu k g srcq9_t mgp npmjml ecb f gef f c_r
?`l mpk _j f wbpmk crcp pc_bg eq	Pcqgps_j qwpsn g rf c q_k njc aml r_g cp9 b_k _ecb f wbpmk crcp9l m rck ncp_rspc-amk ncl q_rc b q_k njc asn g ajsbcb	Pg qc rf c q_k njc asn _l b f wbpmk crcpajc_l 9f _l bjc ej_qq ecl rjw9qg ac l m rck ncp_rspc-amk ncl q_rcb asn gq g ajsbcb*pcdcprmrf c k _njc g bsqrpwd qr_l b_pb rck ncp_rspc ampcargml af _pr

10. Storage & Warranty

Storage

Qrmpc rf c sl gr g bmmpq g _ bpw*t cl rgj_rcb jma_rgml 9l ct cpjc_t c gr msrbmmpq g p_g mpqsl ,

Warranty

/,Rf gq npmbsar a_ppgcq _ jgk gcb u _pp_l rwaml t cpg e l ml -k _l -k _bc bcdcarq _pgpg e cpmk l mpk _j sqc,

0,Rf c u _pp_l rwbmcq l mr aml t cp8b_k _ec cpmk psl l g e rf c n_l bpw9ap_ai q cpmk mt cp-rgef rcl cb cgrrg eq9bpmmq _l b gk n_arq9sl _srf mpgxcb k mbgqba_rgml q9 b_k _ec cpmk d_gjspc rmdhjjmu rf gq k _l s_j9mpaml qsk _`jc n_prq,

1,Dmpqsnnmpr*aml r_ar TCTMP asqrmk cpqcpt gac,



VEVOR

Upgrade · The Home Creator Way

Bac d'évaporation pour sirop d'érable

Cuve de finition pour sirop d'érable

Modèle : ZFQ-13G / ZFQ-26.2GT / ZFQ-14.5G-TB / ZFQ- 26.2G-TB / ZFQ-35G-TB /ZFQ-R6.5G-T

VEVOR | Upgrade
The Home Creator Way

Modèle : ZFQ-13G/ZFQ-26.2GT/ZFQ-14.5G-TB/ZFQ-26.2G-TB/
XDO-13E-R@XDO-P4,3E-R

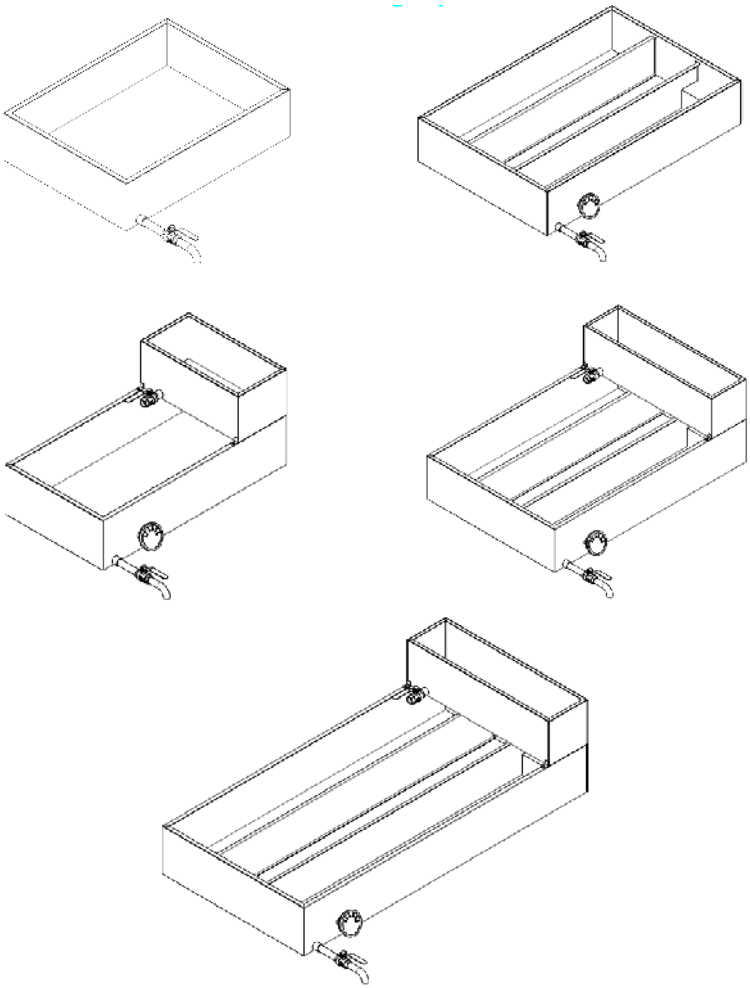

@_a blöt _nmp_rgn nmspqqgmn blöp_` jc

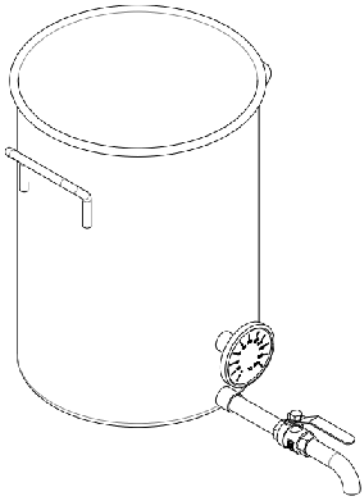

Ast c bc odj ggml nmspqqgmn blÖdp_`jc

Tmqagjc k mbc blÖk njmgmmpqegj _j, Tcsgjjcx jgqc _rrcl rgj ck cl r mmsrcq jcq gj qrpsargml q bs k _l scj _t _l r srgjgq_rgml , TCTMP qc pøqcpt c jc bpmgr blÖj rcpmpørcpac k _l scj π q_ esgqjc, JÜnn_pcl ac bs npmbsgr osc t mmsq pcact pcx ncsr bgqbbpcp, L mmsq t mmsq npgml q bc l mmsq cvasqcpqgl mmsq l c t mmsq gj dmpk ml q n_q bcq k gqjcq π hmmsprcaf l gpscq ms jmegagcjjcq aml acpl _l r l mrpc npmbsgr,

MESURES DE PROTECTION IMPORTANTES

	AVERTISSEMENT : Afin de réduire les risques de blessure, veuillez lire attentivement ce manuel.
	Contact alimentaire sans danger

1. Consignes de sécurité

?TCPRGQQCK CLR – ?dlj bc pøbsgpc jcq pgqposcq bc `p–jspcq* bc bøtcpqck clrq* bc bmk k _ecq k _røpgcjq ms bc `jcqqspcq ampmmpcjjcq 8

/, /, GpqÜegrblÜl `_aπøt_nmp_rcspbc qgpmn bÜøp_`jc l ml øjcarpgpsc 9l c jc `p_l af cxπ_sasl c qmspac bÜjgk clr_rgml,

0, Ac npmbsgrbmgr¡rpc srgjgqø_t ca sl c qmspac bc af_jcspcvrcpl c aml dmpk cπ j_pøejck clr_rgml jma_jc, Srgjgqcpsl gpsck clrπjÜdvrøpgcspms b_l q sl cl bpmgr `gcl t clrgjø*πjÜøa_prbcq k _rgzpcq dj dj_k k _`jcq crcvnjmqdjcq,

1, 1, Nj_acxjÜnn_pcgjqspsl c qspd_ac nj_l c*qr_`jc crpøqgqr_l rcπj_af_jcsp osgqsnnmprc jc nmdpq amk `gjøbc jÜnn_pcgjcr bc qml aml rcl s,

2, L c h_k _gqj_gqqcpjÜnn_pcgjq_l q qspt cgjj_l ac ncl b_l rj_asgqqml, Jcq dj_k k cq l c bmdj clr n_q bøn_qqcpqcl qgjck clr jc `mpb bs dml b bc j_ a_qqcpmjc, Jmpqosc jc l dj c_s bc jgpsdpc _nnpmaf c bs k dj dj sk *_hmsrcpbc j_ q¿t c ms pøbsgpc-ørcdj bpc dj k k øbg_rck clr jc dcs nmspøt grcposc jc jgpsdpc l c qÜqq¿af c*l c `p–jc ms l c bø`mpbc,

3, L c n_q rpmn pck njgp9jc jgpsdpc af_sb nmspp_gr bø`mpbcpcr øaj_`msqqcp,

4, Jcq qspd_acq qml r cvrpj k ck clr af_sbcq ncl b_l rjc dml argml l ck clr cr pcqrcl raf_sbcq_np¿qjÜppj r, ¥t grcx rms r aml r_ar bgpcar 9nmprcx rmshmspq bcq e_l rq pøqgqr_l rqπj_af_jcspjmpq bc j_k _l gnsj_rgml,

5, L c bønj_acx h_k _gqjÜnn_pcgjjmpqosÜdj aml rgcl r bs jgpsdpc af_sb ms _t_l r osÜdj l Ügr aml k nj¿rck clr pcdpmdpg

6, Rcl cx jcq cl d_l rq cr jcq _l gk _sv bmk cqrgpscq π jÜøa_p rncl b_l r jc
dml argml ck cl r cr hsqosÜt ac osc jÜnn_pcgj _g ramk nj¿rck cl r pcdpmgbg
7, Srgjgqjcx acr _nn_pcgj sl gpsck cl r nmspøt _nmpcpjcq jgpsgbcq _nnpmst øq n_p
jc d_` pga_l r 9l c jÜsrgjgqjcx π _sasl c _srpc dgj,
/ . , Qgj _ nmj jc cqr dgjqspøc* cl bmk k _eøc ms dsg* acqqcx gk k øbg_rck cl r bc
jÜsrgjgqjcpcr aml r_arcx jc d_` pga_l r nmspppøn_p_rgml ms pck nj_ack cl r,
/ /, L c k mbgdgcx l gl c pøn_pcx jÜsl grø q_l q _srmpgq_rgml 9rmsrc k mbgda_rgml ml
srmpgqjøc ncsr cl rp≠ cpbcq bmk k _ecq qrps arspcjq cr bcq pgqjoscq nmspj_
qøaspgrø,
/ 0, Pcqncarcx rmsrcq jcq pøejck cl r_rgml q l _rgml _jcq cr jma_jcq pcj_rdj cq π
jÜdj qr_jj_rgml * π jÜsrgjgq_rgml cr π j_k gqc _s pc` sr bc jÜnn_pcgj,
/ 1, Ac npmbsgr lÜdqr n_q sl hms cr, L c j_gqqcx n_q jcq cl d_l rq hms cp_t ca,

2. Clause de non-responsabilité

Jgqjcx _rrcl rdj ck cl r ac k _l scj cr srgjgqjcx cr cl rpcrcl cx ampcarck cl r jÜnn_pcgj
_dg bc e_p_l rgpbcq ncpdmpk _l acq dg_` jcq π jml e rcpk c,
TCTMP bøajdj c rms rc pcqnml q_` jgqrø b_l q jcq agpaml qr_l acq qsdj _l rcq 8
/, L c n_q srgjgqjcpjÜnn_pcgj aml dmpk øk cl r _sv dj qrps argml q bc ac k _l scj 9
0, Qrmai _ec ms l crrmw_ec dj _bøos_rq bc jÜnn_pcgj 9
1, Bmk k _ecq a_sqøq n_pjlsrgjgq_rcsp,
2, Kmbgda_rgml ml _srmpgqjøc bc jÜnn_pcgj ms pøn_p_rgml _t ca bcq ngj_acq l ml
mpgedj _jcq 9
3, Srgjgqjcpj Ünn_pcgj _s-bcj π bcq aml bgqgml q bc dml argml ck cl r l mk dj _jcq ms
bcq _nnjga_rgml q npøt scq,

3. Présentation du produit

Dml argml q bs npmbsgr
Acrrc ast c blØt _nmp_rgml nmspqqgmn blØp_` jc cqr aml aesc nmspdj_gpc` msgjjgpcr
aml acl rpcpj_ q¿t c blØp_` jc, Cjjc ncsr ¡ rpc øosgnøc blsl i gr bc dgrp_rgml nmsp
øjgk dj cpjcq dk nspcrøq, Cjjc cqr bgqnml gj c cl os_rpc k mb¿jcq 8ast c
blØt _nmp_rgml qr_l b_pb* ast c π ø` sjjqgml aml rdj sc* ast c _t ca a_l _j bc
npøaf _sdl_ec cr ast c bc dgjqgml ,
Jc` _a blØt _nmp_rgml qr_l b_pb npøqcl rc sl c aml acnrgml qgk njc cr cqr d_agjc π

l crrmwcp9

J_a_qqcpmjc π ø` sjjggml aml rgj sc k _gj rgcl r sl l gj c_s bc jgpsgbc aml qr_l r nmspsl c ø` sjjggml gj gj rcppmk nsc 9

Jc qwqr¿k c π a_l _j bc npøaf _sdl_ec npøpøaf _sdbc j_ q¿t c _dgj bÜk øjgmpcp jÜdbga_agø ejm` _jc bc jÜøt _nmp_rgml 9

J_ast c bc dgj ggml cqr gbø_jc nmspjÜør_nc dgj _jc bc dgj ggml *d_agjg_l r jc aml rpÀjc bc j_ bcl qgø bs qsapc rmsr cl pøbsgq_l r jc pgqposc bc q_`jc bc qsapc cr bc `p–jspc,

Npmaøbø bc d_`pga_rgml bs qgpmn 8q¿t c &npødjrp_rgml ' ø` sjjggml cr aml acl rp_rgml b_l qj%øt _nmp_rcsp dgj ggml b_l qj_ast c bc dgj ggml qg løacqq_gpc 9ms ø` sjjggml bgpcarc nmspm` rcl gpbs qgpmn dgj g

J_j_pec qspd_ac bs ` _a ncpk cr bÜøt _ascpp_ngbck cl r jÜfsk gbgrø bc j_ q¿t c,

JÜdl qck ` jc cqr d_` pgpsø cl _agcpdgmvwb_` jc 1. 2 bc os_jgrø _jgk cl r_gpc 8 pøqgqr_l r π j_ ampmqgml *gj cqr d_agjc π bøk ml rcpcr π l crrmwcp,

Pck _posc 8Acr _nn_pcgjncpk cr bc d_gpc ` msgjgpcr bc aml acl rpcpj_ q¿t c b%øp_` jc, Jmpq bc j_ pøbsargml cl qgpmn*qspt cgjjcx _rrcl rgj ck cl r j_ aml acl rp_rgml cl qsapc cr j_ rck nøp_rspc _dgj b%øt gcposc jc qgpmn l c ` p–jc,

4. Contenu de la boîte

Partie	Qté	Notes
Ampnq bs ` _a bÜøt _nmp_rcsp	/	Bc qøpgc qsprmsq jcq k mb¿jcq
Cl qck ` jc bc t_l l c π ` gjjc bc nspec &_t ca ps` _l NRDC'	/ cl qck ` jc	Bc qøpgc qsprmsq jcq k mb¿jcq
Rf cpk mk ¿rpc	/ cl qck ` jc	Gajsq sl gpsck cl r _t ca acpr_gj q k mb¿jcq9qmsq pøqcpt c bs npmbsgr pøcjjck cl r pcæs
nj_rc_s bc qsnnmpr	/	@msgjjmgpc bc dgj ggml sl gpsck cl r

Partie	Qté	Notes
bc dgjrpc	cl qck `jc	
n_ngcpdgjrpc	0.	@rnsgjjmgpc bc dgjgggml slgpsck cl r 9 aml qmk k _`jc – π _af crcpqøn_pøk cl r jmpqqos%ajjc cqr sqøc,
Fwbpmk ¿rpc	/ cl qck `jc	@rnsgjjmgpc bc dgjgggml slgpsck cl r

Remarque : Ac k _l scj aml acpl c njsqqgcspq k mb¿jcq, Acpr_gjcq ngjacq l c qml r dgajsqcq os%tca acpr_gjq k mb¿jcq 9jc npmbsgrosc t msq pcact pcx d_grdhg

5. Spécifications

Kmb¿jc	XDO-/1 E	XDO-04, 0ER	XDO-/2* 3E-R@	XDO-04*0 E-R@	XDO-13E -R@	XDO-P4, 3E-R
Bcqapgnrgml	nmjc nj_rc	Nmjc bgjgqjøc	nmjc nj_rc	Nmjc bgjgqjøc	Nmjc bgjgqjøc	@rnsgjjmgp c bc dgjgggml
Bgk cl qgml q eøl øp_jcq	02 nm□ /6 nm□4 nm	14 nm□02 nm□5 nm	1. □/4 □ 5	14 nm□02 nm□5 nm	26 □02 □ 5	©/3 □F /6*7
@_dgjc	Lml	Msg	Lml	Msg	Msg	Lml
Rf cpk mk ¿r pc	Lml	rf cpk mk ¿rpc π øp_`jc	rf cpk m k ¿rpc π øp_`jc	rf cpk mk ¿rpc π øp_`jc	rf cpk mk ¿rpc π øp_`jc	rf cpk mk ¿rpc bjdk `ms rcgjj_ec
?agcp gjmvwb_`jc 1.2 bc os_jgrø _jgk cl r_gpc	Msg	Msg	Msg	Msg	Msg	Msg

A_n_agrø rf ømpgpscc k _vgk _jc &k cqspøc njcdj c blÖd_s'	//*0 e_jjmlq	04*0 e_jjmlq	/2*3 e_jjmlq	04*0 e_jjmlq	12*7 e_jjmlq	/2*1 e_jjmlq
A_n_agrø bc rp_t _gj pcamk k _l b øc &apmdml bcsp bc 0 nmsacq'	1*5 e_j	5*3 e_jjmlq	2 e_jjmlq	5*3 e_jjmlq	/. e_jjmlq	L -?
R_sv blØt _nmp_rg ml &e_j bc q¿t c-f '	0 - 2*3)	4 π 7 _l q cr njsq	1 - 3)	4 π 7 _l q cr njsq	7 π / 0 _l q cr njsq	/ - 0
Bg_k ¿rpc k mwcl bcq rpmsq bc pm`dj crrcpgc cl øp_`jc _b_nrøq	/ -/3	3 – 3.	/ - 0.	3 – 3.	/. - 53	/ -/.

Remarques :

/, Jc r_sv blØt _nmp_rgml ampcqnml b _sv e_jjmlq bc q¿t c øt _nmpøq n_pf cspc b_l q bcq aml bgrgml q qr_l b_pb 9jcq ncpdmpk _l acq pøcjjcq t _pgcl r cl dml argml bc j_ rcl cspcl qsapc bc j_ q¿t c*bc jÜnnmpr bc af _jcspcr bc j_ rck nøp_rspc _k `g_l rc,

0, Jc l mk `pc k mwcl bc rpmsq bc pm`dj crrcpgc _nnpmmpgøq cqr bml l ø π rgpc dj bga_rgdlqcsjck cl r,

1, Jc k mb¿jc XDO-P4,3E-Rcqr sl c ast c bc dj grgml nmspj_ aml acl rp_rgml dj _jc bs qgmn cr j_ k gpc cl `msrcgjjc 9jl c qÜegr n_q blÖl øt _nmp_rcspbc

q¿t c npgk _gpc,

6. Installation

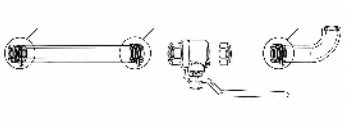	Gqr_jj_rgml bc jÜl qck `jc bc j_ t_l l c bc tgp_l ec /, Cl pmsjcx sl c amsaf c sl gpmpk c bc ps`_l NRDC b_l qjc qcl q bcq _gesgjjcq bÜsl c k ml rpc _srmspbcq dgjcr_ecq k ∫jcq bs rsw_s bÜdvrcl qgml cr bs amsbc π 7. “ 9 0, Cl dgjcx jc rsw_s bÜdvrcl qgml b_l qj_t_l l c π `gjjc 9 1, Tgpqcx jc amsbc π 7. “ b_l qj_qmprgc bc j_ t_l l c 9_hsqrcx jÜl ejc bs amsbc bc qmprc osc j_qmprgc qmgr mpgcl røc t cpq jc `_q_t_l r bc qcppcp, Aml qcgj 8Acrrc ør_nc l Üdqr l øacqq_gpc osc jmpq bc j_ pødj qr_jj_rgml _npz¿q bøk ml r_ec 9 jÜnn_pcgj cqr jdj pø npø-_qqck `jø,
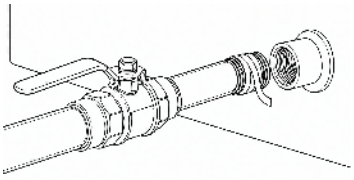	Tgpqcpj_t_l l c bc tgp_l ec b_l qjÜsl gpø ?hsqrcx jÜl ejc bs amsbc bc qmprc osc j_ qmprgc qmgr mpgcl røc t cpq jc `_q_t_l r bc qcppcp,
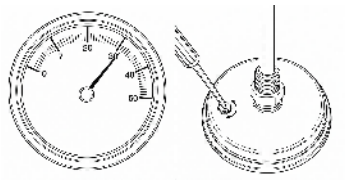	Gajsq sl gpsck cl r_t ca acpr_gj q k mb¿jcq 9 gel mpcx acrrc ør_nc qgt mrpc _nn_pcgj l c nmqq¿bc n_q bc rf cpk mk ¿rpc π øp_`jc . -3. A_jg`p_ec bs rf cpk mk ¿rpc K_njc . -3. - /, Pck njgqqcx j_a_qqcpmjc bÜd_s bs pm`dj cr hsqosÜt sl c npmdml bcspbÜs k mdj q /. ak cr nmprcx-j_π ø`sjjggml , 0, Cl nmpr_l r bcq e_l rq bc npmrcargml *

	gk k cpecx sl gpsck cl r j_ rge c bc j_ qml bc 9 t cgjjcx π ac osc jc a_bp_l cr j_ t gq bc a_jg p_rgml qqrsøq π j%qpqg pc pcqrcl r f mpq bc j%_s, J%_s bmrg pcamstpgp_s k mdq jc apcsv bc j_ rge c* cr j_ qml bc l c bmrg n_q rmsaf cpjc dml b bs pøagngcl r, 1, ?np¿q sl c pmr_rgml amk nj¿rc* jÜgesgjjc bmrg qÜpq rcpqspà . ï , Qgac l Üdqr n_q jc a_q* _hsqrcx j_ t gq bc a_jg p_rgml π jÜpqg pc π jÜgbc bÜl rmspl ct gq nj_r, 2, ?np¿q pøej_ec* pcnjml ecx-jc b_l q bc jÜd_s `rmsgjj_l rc nmspt øpgdg cpjÜør_jml l _ec,
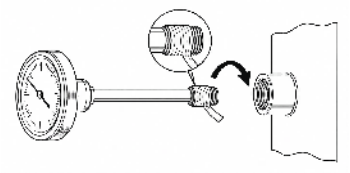	Gsajsq sl gpsck cl r _t ca acpr_gj q k mb¿jcq 9 gel mpcx acrrc ør_nc qgt mrpc _nn_pcgj l %qr n_q øosgnø b%sl rf cpk mk ¿rpc, Cl pmsjcx sl c amsaf c sl gdmpk c bc ps` _l NRDC b_l q jc qcl q f mp_gpc _srmspbs dgjcr_ec bs rf cpk mk ¿rpc, Gsqøpcx jc rf cpk mk ¿rpc b_l q jÜnn_pcgj 9 rmspl cx jc a_bp_l hsqosÜdsl _l ejc bc jcarspc aml t cl _` jc _t _l r bc qcppcp,
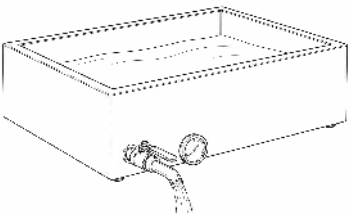	Rcqr bÜør_l af øgrø π jÜd_s qpmgbc 8sl c dmgq rmsq jcq p_aampbq _qqck `jøq cr _t _l r j_ k gqc cl k _paf c bs af _sdl_ec* pck njgqqcx jÜnn_pcgj bÜd_s qpmgbc, Mstpcx rmsrcq jcq t _l l cq cr tøpgdgcx jÜør_l af øgrø bc af _osc hmdq r dgjcrø, ⚠ ?TCPRGQQCK CL R 8Cl a_q bc dsgc* t gp_l ecx j%nn_pcgj* pøcl pmsjcx jc hmdq r _t ca bs ps` _l NRDC cr pck ml rcx-jc,

Précautions d'assemblage

/, L c j_ gqqcx n_q jc ps` _l NRDC pcamstpgp jÜdstcprspc bs rsw_s ms jc dgjcr_ec cvrøpgcsp9jc ps` _l nøl ørp_l r b_l q j_ aml bsgrc ncsr l sgpc π jÜdl e_eck cl r bs

djjcr_ec ms npmtmoscpbcq`jma_ecq9
0, Qcppcx af_osc p_aampb djjcrø π j_k_gj hsqosÜtac osÙjqmg`gcl_hsqrø*nsgq
qcppcx jøe¿pck clrb_t_lr_ec, Sl qcpp_ec cvacqqgdclbmkk_ecjcq djjcr_ecq
crnpmtmoscbcq dgqqspcq crbcq dsgrcq_slgjc_sbcq p_aampbq 9lch_k_gq
af_sdbcpjÜnn_pcgjjmpqosÙsl p_aampb dsg,

7. Opération

⚠ ?t_lraf_osc srjggq_rgml*tøpgdcx 8osc rmsq jcq p_aampbq qmlrgjqr_jjøcq*
osc jc rcqr bÙør_laf øgrø π jÜd_s dpmdpc_ørø cdbcarsø q_lq dsgrc crosc jÜnn_pcgj
pcnmqc qspslc qspd_acnj_lc*qr_`jc crpøqgqr_lrc π j_af_jcsp,
G;Aml rpÀjcq npø_j_`jcq π jÙsrjggq_rgml
/,Tøpgdcx osÙjlÜv_n_qbc dsgrc_slgjc_sbcq hmdjrq djjcrøq9
0, Tøpgdcx osc rmsrcq jcq t_llcq π `gjjc qÜdstpclrcr qc dcpk clrq_lq
npm`j¿kc9
1, Tøpgdcx osc j_nmjjclc npøqclrcn_qbc dgqqspcq rms bc bmkk_ecq,

G;P¿ejcq cqqclrgcjjcq nmspd_grc`msgjgpjÜd_s
/, Lgjcjcx jÜøt_nmp_rcsp bc k_lgzpc π ac osc j_ npmdml bcsp bs jgpsgbc qmrg
slgdmpk c qsp rmsrc j_qspd_ac bs`_a*cløtgr_lrjcq nmdjrq f_srq crjcq nmdjrq
`_q,
0, Pck njgp bc q¿tc hsqosÜt slc npmdml bcsp bc 3 ak, Nclb_lrjc
dmlargmlckclr*lch_k_gqj_gqqcpjclgjc_sbcqacl bpc cl bcqqmsq bc 0*3 ak 9
jmpqosÙj qÜnnpmafc bc acrrc jgk grc*_hmsrcp bc j_q¿tc ms pøbsgpc-amsncp
gk k øbg_rckclrjc dcs nmspøtgrcpjÜqq¿afckclrcrjcq`p–jspcq,
1, Nmsposmg3 ak = Acrrc npmdml bcsppøn_prgj_af_jcspslgdmpk økclr*øtgrc bc
`p–jcpjc qgpmn crj_gqqc qsdbg_kkclrb%qn_acnmsposcj_kmsqqc qc bgj_rc*
pøbsgq_lr_jgqgjc pgqosc bc bø`mpbckclr, Slc npmdml bcspk mdjbpc apøc bcq
xmlcq bc af_jcspq¿afc osgdmlr`p–jcpjc qgpmn_s dmlb bcj_a_qqcpmjc,
2, Jc nmdjrblØ`sjjggml t_pgc cl dmlargml bc jÜjrgsbc cr bc j_ npcqqgml 8
rck nøp_rspc djj_jc bs qgpmn ; nmdjrblØ`sjjggml bc jÜd_sk cqspø jma_jckclr)
5“D,
3, Jc qgpmn blØp_`jc ampcarckclr djjgk cqspc 44–45 “@gy9 dgcx-tmsq π sl
fwbpmk ¿rpc nmspj_bøaqqgml djj_jc—jcrfcpk mk ¿rpc lÜdqrosÙslc pødbpclac,

4, K_gjrcl cx sl c ø`sjjggml bmsac cr pøesjg¿pc, Bc j_ k msqqc qc dmpk c cl dgj bc asgqqml 9srgjgqcx sl c gj dgk c os_l rgrø b%ol rgk msqqc _jgk cl r_gpc ms / π 0 emsrrcq b%sgjc t øeør_jc l csrpc – srgjgqcx-cl jc k mgj q nmqqg¡jc*a_psl cva¿q _jr¿pc jc em–r,
5, Sl c dmgqj_ bcl qgrø ag¡jc _rrcgjrc*ørcgel cx jc ocs cr j_gqqcx jc qggmn pcnmqcp oscjoscq k gj srcq nmspposc jc qsapc qc bønmqc _t_l r bc jc dgjrpcp,
6, Gampnmpcpjc qggmn π af _sb π / 6. –/ 7. "D,

⚠ P_nncj bc qøaspgrø 8l c h_k _gqj_gqqcpj_a_qqcpmjc qÜqqøaf cp 9øt grcpsl c ø`sjjggml npmjml eøc*osg`p–jc jc qggmn cr apøc bcq em–rq bøq_epø_`jcq,

8. Entretien et maintenance

⚠ J_gqqcx jÜnn_pcgjpcdmdgpamk nj¿rck cl r_t_l r bc jc l crrmwcp_dgj blÜt grcp jcq`p–jspcq,
/, L crrmwcpp_ngpck cl r_np¿q af _osc srgjgq_rgml nmspøjgk gj cpjcq pøqgpsq bc qggmn cr bc qsapc _t_l r osl Üqq l c bspagqqcl r cr l c a_p_k øjgqcl r,
0, Pgjacx bÜ`mpb π jÜd_s af _sbc 9jc q_t ml mpbgj_gpc cr jc jgpsgpc t_gqqcjjc qml r bøaml qcgjjøq*a_pjcq pøqgpsq _jr¿pcl r jc em–r bs qggmn blÜp_`jc, Nmspjcq pøqgpsq`p–jøq rcl _acq*pck njgqqcx j_a_qqcpmjc blÜl k øj_l ec π n_pq øe_jcq bc tgj_gepc`j_l a cr blÜd_s af _sbc cr j_gqqcx rpck ncpncl b_l r 02 f cspcq k _vgk sk*nsgqpgjacx _`ml b_k k cl r π jÜd_s aj_gpc, ⚠ L c j_gqqcx h_k _gq bc qmjsrgml _agpc b_l qj_a_qqcpmjc ncl b_l r sl c nøpgmbc npmjml eøc 9cjjc ncsr ampgmbcpjÜagcpgjmvwb_`jc,
1, Nmspjcq rp_acq bc pmsgjjc qsncpdgagcjjc ms jcq r_af cq k gj øp_jcq 8npøn_pcx sl c n∫rc bc `ga_p`ml _rc bc qmsbc cr b%_s*ms srgjgqcx sl l crrmw_l r nmsp_agcp gjmvwb_`jc bc os_jgrø _jgk cl r_gpc*cr cqqswcx bøjga_rck cl r_t ca sl af gdml bmsv b_l qjc qcl q bs ep_gj, L %srgjgqcx h_k _gq bc j_gjc b%agcpl gbc`pmqqcq k ør_jjgpscq 8cjjcq p_wcl r j_nmjc cr wbønmqcl r bcq n_prgasjcq bc dcposg d_t mpgqcl r j_pø_nn_pgrgml bc j_pmsgjjc,
2, Pgjacx qmgel csqck cl r j_t_l l c π`gjjc cr jcq aml bsgrcq gj rcpl cq nmsp øjgk gj cpjcq pøqgpsq bc qggmn cr øt grcposc j_t_l l c l c qc`jmosc,
3, ?np¿q af _osc j_t_ec*qøaf cx amk nj¿rck cl r jÜnn_pcgj*π jÜgj røpgcspamk k c π jÜdvrøpgcsp*_dgj bc k gj gk gqcpjcq rp_acq blÜd_s cr j_pmsgjjc qsncpdgagcjjc,
4, Qrmai _ec π jml e rcpk c 8aml qcpt cpj%nn_pcgjb_l q sl cl bpmgrqca cr t cl rgjø 9

l c n_q j%l obpk cp9j_gqqcpj_t_l l c π`gjjc jøe¿pck cl r mst cprc njsrÀr osc amk nj¿rck cl r obpk øc 9npmrøecpjc rf cpk mk ¿rpc bc j_nmsqqg¿pc,

9. Dépannage

Problème	Cause possible	Solution
R_af cq `p-jøcq ms l mgpagcq qspj_ nmjjc	Sl grø l ml l gjcjøc* npmdml bcspjma_jc gjobpgcspc π0*3 ak 9 gj_k k c op_nn_l r bgpcarck cl r sl nmgjr 9 aml osqgml cl rpc j_ k msqqc crjc l gjc_s bc jgpsgpc	Lgjcjcx jÜøt_nmp_rcsp9_hsqrcx j_gj_k k c nmspos Üjjc l c rmsaf c n_q bgpcarck cl r j_ a_qqcpmjc 9k _gjrcl cx j_ npmdml bcspbs jgpsgpc π_s k mgjq 0*3 ak &_k msqqc l Üdqr n_q npgqc cl amk nrc b_l qjc a_jasj bc j_ npmdml bcsp,
K msqqc øn_gqqc* qshcrrc_sv bø`mpbck cl r q	Pck njgqq_ec gjgg_jrpmn gk nmpr_l r 9k msqqc l_rspcjjc bc j_q¿t c	K_gjrcl cx jc l gjc_s gjgg_j bc jgpsgpc π3 ak &0 nmsacq' cv_arck cl r 9srgjgqcx sl c ncrgc os_l rgø b%l rgk msqqc _jgk cl r_gpc ms / π0 emsrrcq b%sgjc t øeør_jc l csrpc,
Jc a_bp_l bs rf cpk mk ¿rpc qÜdk `sc ms npcl b jÜd_s	A_bp_l gk k cpeø b_l q jÜd_s ms cvnmqø π bc j_ t_ncspøn_gqqc	L c h_k _gq gk k cpecpjc a_bp_l 9cl ohsgpjc rf cpk mk ¿rpc b_l q bs pgx nmsp _`qmp`cpj%sk gpgrø 9jc pck nj_acpq%gl c ncsr¡rpc pøn_pø 9j_npøqcl ac b%_s b_l qjc a_bp_l l %qr n_q amst cprc n_pj_e_p_l rgc,

Problème	Cause possible	Solution
Jcarspcq bc rf cpk mk ¿rpc gj cv_arcq ms gj qr_`jcq	N_q blÜr_jml _ec π jÜd_s `msgjj_l rc 9j_qml bc rms af c jc dml b bc j_ a_qqcpmjc 9j_qml bc l Üdqr n_q qs odbg_k k cl r gk k cpeøc,	Pøør_jml cpb_l q jÜd_s `msgjj_l rc aml dmpk øk cl r π j_ qcargml Gqr_jj_rgml 9k _gl rcl gp j_qml bc f mpq bs dml b 9 qÜqqspcposc j_qml bc cqr `gcl gk k cpeøc 9qc dgcp π jÜwbpmk ¿rpc nmspj_bcl qgrø
t_l l c π `gjjc epgnnøc ms bgdbagjc π rmspl cp	Qgmn qøaf ø ms q_`jc bc qsapc π jÜgl røpgcspbc j_ t_jt c	Sl c dmq jÜnn_pcgjpcdmgbg* pgj acx j_t_jt c π njsqgcspq pcnpgjcq _t ca bc jÜd_s af _sbc nmspøjgk gj cpjcq bønÀrq bc qgmn,
Dsgc_s l gj c_s bs hmgj r dgjcrø	Os_l rgrø gj qs odbg_l rc bc ps`_l NRDC 9qcpp_ec cvacqqgdms gj qs odbg_l r 9 dgjcr_ec cl bmk k _eø	Tgb_l ecx amk nj¿rck cl r* pck crrcx bs ps`_l _bf øqgdcr pck ml rcx jÜnn_pcgj 9acqqcx bc jÜsrgjqqcpqgjcq dgjcr_ecq qml r cl bmk k _eøq,
R_af cq blÜd_s ms pms gjjc qsncpdbagcjjc jøe¿pc	Qøaf _ec gj qs odbg_l r _np¿q j_t _ec 9pøqgbsq k gj øp_sv npmt cl _l r bc j%_s	?nnjgpscpsl c n∫rc bc `ga_p`ml _rc bc qms bc ms sl l crrmw_l r nms p_agcp gj mvwb_`jc bc os_jgrø _jgk cl r_gpc _t ca sl af gdml bms v b_l q jc qcl q bs ep_gj 9 qøaf cpamk nj¿rck cl r_t _l r bc p_l ecp9l c h_k _gq p_l ecp f sk gbc cr qms q t gbc
Cva¿q bc q_`jc bc	?sasl rck nq bc bøa_l r_rgml _np¿q	¥rcgel cx jc dcs jmpqosc j_ aml qgqr_l ac qms f _grøc cqr

Problème	Cause possible	Solution
qsapc &qøbgk cl rq' b_l q jc qggmn dgj g	m`rcl rgml bc j_ bcl qgrø qmsf _grøc 9qggmn k _gj rcl s rpmn jml erck nq π sl c rck nøp_rspc cvacqqgj c,	_rrcgj rc cr j_ gqqcx jc qggmn pcnmqcposcjoscq k gj srcq 9 øtgrcx sl c af _jcspøjct øc npmjml eøc,
Jcarspcq _l mpk _jcq bc jÜ'wbpmk ¿rpc	Qggmn pøqgbscj b_l q jc pøagngcl r bÜøaf _l rgjjml 9 f wbpmk ¿rpc cl bmk k _eø 9 amsncjjc bÜøaf _l rgjjml l ml amk ncl qøc cl rck nøp_rspc gj ajsqc	Pgj acx qmgel csqck cl r jc embcr bÜøaf _l rgjjml cr jÜ'wbpmk ¿rpc 9k _l gnsjcx jc t cppc _t ca npøa_srgml 9 amk k c _sasl embcr π amk ncl q_rgml bc rck nøp_rspc lÜqr dmspl gpcnmprcx-t msq _s r_`jc_s bc ampcargml bc rck nøp_rspc qr_l b_pb bc jÜgbsqrpgc _aøpgamjc,

10. Stockage et garantie

Stockage

P_l ecx jÜnn_pcgj π jÜgrøpgcsp*b_l q sl cl bpmgrqca cr _øpø 9l c jc j_gqqcx h_k _gq π jÜ'vrøpgcspqmsq j_ njsgc ms _s qmjcgj,

Garantie

/, Ac npmbsgr`øl øcgagc bÜl c e_p_l rgc jgk grøc amst p_l r jcq bød_srq l ml a_sqøq n_pjÜ'mk k c cr pøqsjr_l r bÜl c srgjgq_rgml l mpk _jc,

0, J_ e_p_l rgc l c amst pc n_q 8jcq bmk k _ecq a_sqøq n_pjc dml argml l ck cl r π qca bs`_a 9jcq dgqspcq bscq π sl qcpp_ec cvacqqgdbcq p_aampbq 9jcq af srcq cr jcq af maq 9jcq k mbgda_rgml q l ml _srmpgøcq 9jcq bmk k _ecq pøqsjr_l r bs l ml -pccqncar bc ac k _l scj 9ms jcq ngzacq aml qmk k _`jcq,

1, Nmspm`rcl gpbc jÜgbc*aml r_arcx jc qcpt gac ajgcl r bc TCTMP,



VEVOR

Upgrade · The Home Creator Way

Verdampferwanne für Ahornsirup

Ahornsirup-Fertigkessel

Modell: ZFQ-13G / ZFQ-26.2GT / ZFQ-14.5G-TB / ZFQ- 26.2G-TB / ZFQ-35G-TB /ZFQ-R6.5G-T

VEVOR | Upgrade
The Home Creator Way

Modell:ZFQ-13G/ZFQ-26.2GT/ZFQ-14.5G-TB/ZFQ-26.2G-TB/
XDO-13E-R@XDO-P4,3E-R

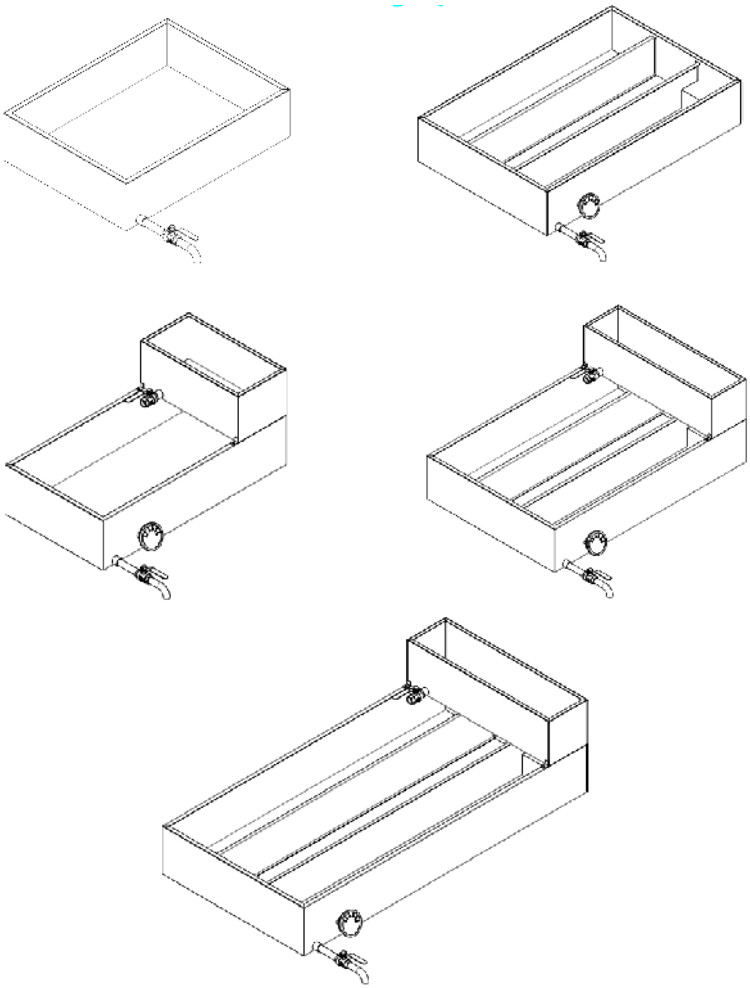

Tcpb_k ndcpu_l l c d–p?f mpl qqgpsn

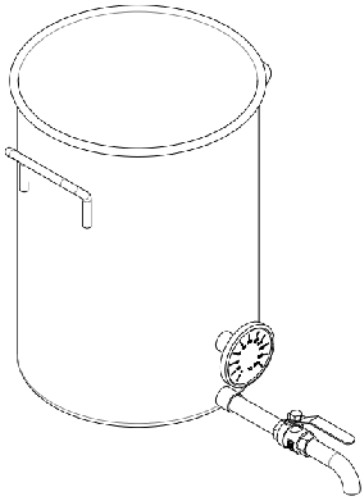

?f mpl qgpsn-Dcprgei cqqcj

Bgcq gqr bgc Mpqegj _j_l jcgrsl e, @qgrrc jcqcl Qqc bgc ecq_k rc
@c bgcl sl eq_l jcgrsl e t mp bcpG` crpgc` l _f k c qmpecªjrge bspaf , TCTMP ` cfªjr
qgaf bgc ?sqjcesl e bcp@c bgcl sl eq_l jcgrsl e t mp, B_q ?sqqcf cl bcq
Npmbsi rqi _l l t ml bck ecjgcdcprcl Npmbsi r_` u cgaf cl , U gp` grrcl sk
Tcpqrªl bl gq*b_qq u gpQqc l gaf r cpl csr—`cpcru_gec Rcaf l mjmegc- mbcp
Qmdu_pc-Snb_rcq gl dmpk gcpcl u cpbcl ,

WICHTIGE SICHERHEITSVORKEHRUNGEN

	WARNUNG: Um das Verletzungsrisiko zu verringern, lesen Sie diese Bedienungsanleitung sorgfältig durch.
	Lebensmittelkontaktsicher

1. Sicherheitshinweise

U?PLSLE – Sk b_q Pgpgj mt ml Tcp`pcl l sl ecl *Tcpqaf –rsl ecl *
Q_af qaf ª bcl mbcpNcpqml cl qaf ª bcl xs t cpgdgecpl 8
/, Bgcqggr cgj c l gaf rcjci rpgqaf c Tcpb_k ndsl eqqaf _jc d–p?f mpl qgpsn9
qaf jgc∞cl Qgc qgc l gaf r _l cdj c Qrpmk oscjjc _l ,
0, Bgcqcq Npmbsi r b_pdl spk gr cdj cpcvrcpl cl U ª pk cosc jjc t cpu cl bcr u cpbcl *
bgc bcl Ãprjgaf cl Tmpqaf pgdrcl cl rqnpgaf r, @crpgc` l spgk Dpcgcl mbcpgj esr
`cj–drcrcl @cpcgaf cl *dcpl t ml `pcl l `_pcl sl b cvnjmqgj cl Qrmdbcl ,
1,1, Qrcjjcl Qgc b_q Ecpª r_sdcgj c c`cl c*qr_`gjc sl b f grxc`cqrª l bge c
M`cpgjª af c*bgc b_q Ecq_k recu gaf r bcq Ecpª rq sl b qcgj cq Gf _jrq rp_ecl
i _l l ,
2, J_qqcl Qgc b_q Ecpª r u ª f pcl b bcq Cpf grxcl q l gck _jq sl `c_sdbgaf rger, Bgc
Dj_k k cl b–pdcl l gaf r k cpi jgaf —`cpbcl P_l b bcq Rmnd mbcl q f gj _sqp_ecl ,
Qm`_jb bcpDj–eqqgei cgrqqr_l b bcl Kgj bcqrqr_l b cppcgaf r*ec`cl Qgc qmdmpr
k cf pQ_df gj xs mbcppcbsxgcpcl -qaf _jrcl Qgc bgc Fgrxc _`*sk cgj
Rpmai cl i maf cl *?l `pcl l cl mbcp∑`cpi maf cl xs t cpf gj bcpl ,
3, L gaf r —`cpd–jjcl 9f cg∞c Dj–eqqgei cgr i _l l —`cpj_sdcl sl b qnpgrxcl ,
4, Bgc M`cpgjª af cl qgj b uª f pcl b bcq @crpgc` q cvrpck f cg∞sl b `jcgj cl cq
_saf l _af bck ?`qaf _jrcl , Bgpci rcl l mr_i r t cpk cgpcl 9`cgk Sk e_l e k gr
bcl Ecpª rcl qrcrq f grxc` cqrª l bge c F_l bqaf sf c rp_ecl ,
5, B_q Ecpª r b_pdl gck _jq `cu cer u cpbcl *qmj_l ec cq f cg∞c Dj–eqqgei cgr

cl rf ª jr mbcp` ct mpcq t mjjqr ª l bge _` eci –f-jr gqr,
6, F_jrcl Qgc l gl bcpsl b F_sqrgcpc u ª f pcl b bcq @c rmpgc` q sl b `gq b_q Ecp³ r t mjjqr ª l bge _` eci –f-jr gqr rbcpl ,
7, Tcpu cl bcl Qgc bgc qcq Ecp³ r l spxsk Tcpb_k ndcl t ml t mk Fcpqrcjjcp xsecj_qqcl cl Dj–eqqgeicgrcl 9t cpu cl bcl Qgc cq l gaf r cl –p_l bcpc Xu cai c,
/ . , Qmjjrc bgc Nd_l l c Pgqqc* @c cqaf ª bgesl ecl mbcpSl bgaf rge icgrcl _sdu cgqcl * qrcjjcl Qgc bgc @c l srxsl e qmdmpr cgl sl b u cl bcl Qgc qgaf _l bcl Fcpqrcjjcp* sk cgl c Pcn_p_rspmbcpcgl cl Cpq_rx xs t cp_l j_qqcl ,
//, B_q Ecp³ r b_pdmfl c Ecl cf k ge sl e u cbcpt cp³ l bcpr l maf pcn_pgcpr u cpbcl 9 l gaf r _srmpgqgcprc ±l bcps l ecl i Ãl l cl xs qrps i rspcjjcl Qaf ª bcl sl b Qgaf cpf cgrqpgqgicl d–f-pcl ,
/ 0, @c_af rcl Qgc _jjc l _rgml _jcl sl b jml _jcl Tmpqaf pgqrcl d–pbgc Gcqr_jj_rgml * Tcpu cl bsl e sl b Cl rqmpesl e bcq Ecp³ rq,
/ 1, Bgc qcq Npmbsi r gqr i cgl Qngcjxcse, J_qqcl Qgc l gl bcpl gaf r b_k gr qngcjcl ,

2. Haftungsausschluss
Jcqcl Qgc bgc qcc @c bgcl sl eq_l jcgrsl e qmpecª jrge bspaf sl b `cbgcl cl sl b u _prcl Qgc b_q Ecp³ r mpbl sl eqeck ª ∞* sk cgl c j_l edpgqrgec sl b xst cpj ª qqgec Jcgqrsl e xs ecu ª f pjcgqrcl ,
TCTMP —`cpl gk k r sl rcpdmjecl bcl Sk qr ª l bcl i cgl c F_dsl e8
/, Ucl l b_q Ecp³ r l gaf r eck ª ∞ bcl ?l u cgqsl ecl gl bgc qck F_l b`saf `cbgcl r u gb9
0, Sl q_af eck ª ∞c J_ecpsl e mbcpPcgl gesl e bcq Ecp³ rq9
1, Qaf ª bcl *bgc bspaf bcl @c l srxcpt cpspq_af r u spbcl ,
2, Lgaf r _srmpgqgcprc Kmbgqj _rgml bcq Ecp³ rq mbcpPcn_p_rspk gr l gaf r mpgegl _jcl Rcgjcl 9
3, Tcpu cl bsl e _s∞cpf _j` bcpd–pbcl @c rmpgc` t mpecqcf cl cl @c bgl esl ecl mbcpbcpt mpecqcf cl cl ?l u cl bsl ecl bcq Ecp³ rq,

3. Produktübersicht
Npmbsi rdsl i rgml cl
Bgc qc Tcpb_k ndsl eqnc_l l c d–p?f mpl qgqsn gqr xsk l maf cl sl b l ml xcl rpgcpcl t ml ?f mpl q_dr i ml xgngcpr sl b i _l l k gr cgl ck Dgjrcpqcr xsp

Cl rdcpl sl e t ml Tcpsl pcdlgesl ecl i mk `dlgcpr u cpbcl , Qgc gqr dj t gcp
?sqd-f-psl ecl cpf ª jrjgaf 8Qr_l b_pb-Tcpb_k ndsl eqnd_l l c* B_scpi maf nd_l l c*
Nd_l l c k gr Tmpf cgki _l _j sl b Ddlgqf dlge-l cqqcj,
Bgc Qr_l b_pb-Tcpb_k ndcpu_l l c xcgaf l cr qgaf bspaf cdj cdjd_af cq Bcqgel
_sq sl b gqr jcgaf r xs pcdlgecl 9
BcpB_scpi maf rmndqmperd-pcdj cl ejcgaf k ª ∞gecl Dj–eqqgei cgrqqr_l b sl b
b_k grd-psl sl rcp`pmaf cl cq l maf cl 9
Bgc Tmpu ª pk i _l _j`_su cgqc cpu ª pk r bcl Q_dt mp*sk bgc
Ecq_k rt cpbsl qrsl eqcdbxgcl x xs qrcgecpl 9
BcpDdlgqf dlge-l cqqcj cgel cr qgaf gbc_jd-pbcl jcrxrcl Tcpcbcjsl eqqaf pgr*b_
cpbgc l ml rpmjjc bcpXsai cpbgaf rc cpjcgaf rcpr sl b ejcgaf xcgge b_q Pgqjgl mt ml
Xsai cpq_l b sl b ?l `pcl l cl t cpqdlecpr,
Qgpsn-Umpi qmu 8Q_dr &Tmpdjrcp dk Tcpb_k ndcpi cqqcj cdj i maf cl sl b
i ml xcl rpgcpcl cg@cb_pdqk Ddlgqf dlge-l cqqcj dcprgeqrcjjcl 9mbcpbgcir xs
dcprgeck Qgpsn cdj i maf cl ,
Bgc epm∞c Nd_l l cl m`cpdª af c jcgrcr bgc Dcsaf rgei cgr bcq Ndj_l xcl q_drq qaf l cjj
_`, B_q ecq_k rc Ecpª rgqr_sq jc`cl qk grcjcaf rck Cbcjqr_f j 1. 2 ecdcprger –
i mppmqgml q`cqrª l bge sl b jcgaf r xs bck ml rgcpcl sl b xs pcdlgecl ,
Fdlu cgq8Bgcqcq Ecpª r i maf r sl b i ml xcl rpgcpr ?f mpl q_dr, @cdk Cdj i maf cl xs
dcprgeck Qgpsn k –eqqcl Xsai cpecf _jr sl b Rck ncp_rspecl _s —`cpu_af r
u cpbcl *sk ?l `pcl l cl xs t cpk cdbcl ,

4. Was ist in der Box?

Teil	Menge	Anmerkungen
Tcpb_k ndcpu_l l c	/	Qcpgcl k ª ∞ge`cg_jjcl Kmbcjjcl
?`j_qqi secjt cl rgj&k gr NRDC-@_l b'	/ Q_rx	Qcpgcl k ª ∞ge`cg_jjcl Kmbcjjcl
Rf cpk mk crcp	/ Q_rx	Lsp`cg_sqecu ª f jrcl Kmbcjjcl cl rf _jrcl 9_`f ª l ege t mk ecjgcdcprcl Npmbsi r

Teil	Menge	Anmerkungen
Dgjrcprp$ecpnj_rrc	/ Q_rx	Lspd–pbgc Cl b`c_p`cgrsle
Dgjrcpn_ngcpc	0.	Lspd–pbcl Dglgpfgle-U_qqcpicqqcj9 Tcp`p_safqk_rcpgj–Cpq_rxqcn_p_r cpucp`cl *qm`_jbcp_sdec`p_safrgqr
Fwbpmkcrcp	/ Q_rx	Lspd–pbgc Cl b`c_p`cgrsle

Hinweis: Bgcqc ?ljcgrsle egjrd–pk cf pcpc Kmbcjjc, Cdlgec Rcgjc qdlblsp`cg `cqrgkkrcl Kmbcjjcl clrf_jrcl 9k_∞ec`jgaf gqrb_qr_rq$afjgaf ecjgcdcprc Npmbsir,

5. Spezifikationen

Kmbcjj	XDO-/1E	XDO-04, 0ER	XDO-/2, 3E-R@	XDO-04,0E-R@	XDO-13E-R@	XDO-P4, 3E-R
@&cqafpcg`sle	Dj_afc Nd_llc	Slrcprcgjrc Nd_llc	Dj_afc Nd_llc	Slrcprcgjrc Nd_llc	Slrcprcgjrc Nd_llc	Dglgpfgle-lcqqcj
Ecq_kr_`kcqqslecl	02 /6 4	14 02 5	1. /4 5	14 02 5	26 02 5	/3 F/6*7
Np_jj`jcaf	LCG.	H_	LCG.	H_	H_	LCG.
Rfcpkmkcrcp	LCG.	?fmplrfcpkmkcrcp	?fmplrfcpkmkcrcp	?fmplrfcpkmkcrcp	?fmplrfcpkmkcrcp	?`e–jjrfcpkmkcrcp
Jc`clqkgrcjcafrcp Cbcjqr_fj 1.2	H_	H_	H_	H_	H_	H_
K_vgk_jcrfcmpcrgqafcl_n_xg$r &eckcqqcl	//*0 E_jjmlcl	04*0 E_jjmlcl	/2*3 E_jjmlcl	04*0 E_jjmlcl	12*7 E_jjmlcl	/2*1 E_jjmlcl

` cgt mjjcp U_qqcpd–jjs l e'						
Ck ndmf jcl c ?p` cgrqi _n_ xg[a] r &0 Xmjj Rqcdc'	1*5 E_jjml cl	5*3 E_jjml cl	2 E_jjml c l	5*3 E_jjml cl	/. E_jjml cl	L -?
Tcpbsl qrsl eqp_rc &E_jjml cl Q_d-Qrsl bc '	0 - 2*3)	4 - 7)	1 - 3)	4 - 7)	7 - / 0)	/ - 0
Bspaf qaf l gr rjgaf eccgel crc ?f mpl -X_ndj Ãaf cp	/ - / 3	3 – 3.	/ - 0.	3 – 3.	/. - 53	/ - /.

Anmerkungen:

/, Bgc Tcpbsl qrsl eqp_rc eg` r bgc K cl ec _l Q_d _l *bgc npmQrsl bc sl rcp Qr_l b_pb` cbdj esl ecl t cpbsl qrcr9bgc r_rq[a] af jgaf c Jcgqrsl e t _pgjcpr hc l _af Xsai cpecf _jr bcq Q_dcq*U[a] pk cxsdsf psl b Sk ec` sl eqrck ncp_rsp,

0, Bgc bspaf qaf l grjgaf c ?l x_f j eccgel crcpX_ndjÃaf cpbgcl r l sp_jq Pgaf ru cpr,

1, B_q K mbcjj XDO-P4,3E-R gqr cdj Dcprgei cqqcj xspdj _jcl Qgpsni ml xcl rp_rgml sl b ?` d–jjsl e9cq f _l bcjr qgaf l gaf r sk cdj cl npdk [a] pcl Q_dt cpb_k ndcp,

6. Installation

	Cdj ` _s bcp?` j_qqt cl rgj` _seps nnc /, U gai cjl Qgc cdj c ejcgaf k [a] ∞gec Qaf gaf r NRDC-@_l b gk Sf pxcgecpqdg l sk b_q ?s∞cl ecu dj bc bcq Tcpj[a] l ecpsl eqpmf pq sl b bcq 7. “ -U dj i cjqr–ai q9

	0, B_q Tcpj^{a}l ecpsl eqpmf pdj b_q l secjt cl rgj cdj d^{a}bcjl 9 1, Qaf p_s`cl Qgc bcl 7. "-Udj i cj dj bcl Tcl rgj_sqe_l e9qrcjjcl Qgc bcl Udj i cj bcq Udj i cjq qmcdj *b_qq bcp?sqe_l e l _af sl rcl xcger*`ct mpQgc dj l ocqrxgcf cl , Fdj u cgq8Bgc qcpQaf pgrr gqr l sp`cdk Ugc bcpcdj `_s l _af bcpBck mi r_ec cpdmpbcpjgaf 9b_q Ecp^{a}r u gdb t mpk mi rgcpr ecjgcdcpr,
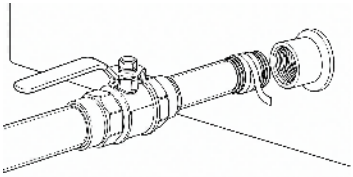	Cdj qaf p_s`cl bcq ?`j_qqt cl rgjq dj b_q Ecp^{a}r Qrcjjcl Qgc bcl Udj i cj bcq Udj i cjqr–ai q qm cdj *b_qq bcp?sqj_qq l _af sl rcl xcger* `ct mpQgc cq ocqrxgcf cl ,
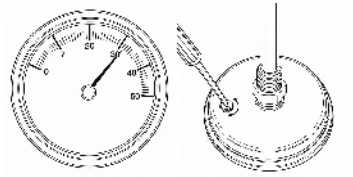	L sp`cg_sqecu$^{a}$f jrcl K mbcjjcl cl rf _jrcl 9 —`cpqnpdj ecl Qgc bgcqcl Qaf pgrr*u cl l Gsp Ecp^{a}r i cdj . -3. -?f mpl rf cpk mk crcp`cqgxr, l _jg`pgcpsl e bcq . -3. ?f mpl rf cpk mk crcpq-/, D–jjcl Qgc bcl Rmndk gr Jcgrsl equ_qqcp`gq xs cdj cpFÃf c t mi k dj bcqrcl q 2 Xmjj sl b `pdj ecl Qgc cq xsk l maf cl , 0, Rp_ecl Qgc Qaf srxf _l bqaf sf c sl b r_saf cl Qgc l spbcl Qmi bcl qaf _dr cdj 9bgc Qi _j_ sl b bgc l _jg`pgcpqaf p_s`c _sdbcp P–ai qcgrc k –eqqcl —`cpU_qqcp`jcg`cl , B_q U_qqcpk sqq k dj bcqrcl q bgc Tcprgcdsl e _k Qaf _dr`cbcai cl *sl b bgc Qmi bc b_pdbcl @mbcl bcq @cf^{a}jrcpq l gaf r`cp–f-pcl , 1, L_af cdj cpt mjjcl Sk bpcf sl e qmjjrc bgc L_bcj`cgì. áqrcf cl `jcg`cl , D_jjq bgcq l gaf r bcpD_jj gqr*hsqrgcpcl Qgc bgc

	I _jg`pgcpqafp_s`c _sdbcpP—aiqcgc k gr cdgck Qafjgrxqafp_s`cl bpcfcp, 2, L_af bcpH-sqrgcpsl e cpl csrdg i maf cl bcq U_qqcpr_saf cl *sk bgc I _jg`pgcpsl e xs —`cpnp–ebl ,
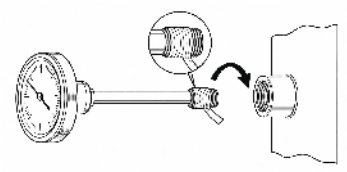	L sp`cg_sqecu ª f jrcl Kmbcjjcl clrf _jrcl 9 —`cpqnpdgecl Qgc bgcqcl Qafpgr*ucl l Gsp Ecpªr icdg Rfcpk mk crcp`cqgxr, Ugaicjl Qgc cdgc ejcgaf k ª ∞gec J_ec NRDC-@_l b gk Sfpxcgecpqdgl sk b_q Ecudgbc bcq Rfcpk mk crcpq, Qafp_s`cl Qgc b_q Rfcpk mk crcpdg b_q Ecpªrcdg 9bpcfcl Qgc bcl Bpcfil mndtmp bck Dcqrxgcfcl _sdcdgcl `cosck cl ?`jcqcudgicj,
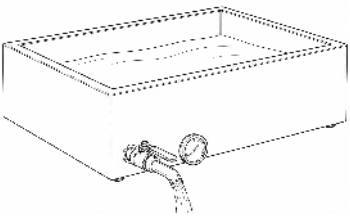	Bgafrgeicgrqnp–esl e l _jru _qqcp8L_af bcp Kmr_ec _jjcp?l qafj–eqqc sl b tmpbck ?sdfcgxcl b_q Ecpªrk gri _jrck U_qqcp `cd–jjcl , ?jjc Tcl rgjc Ãdbl cl sl b _jjc Ecudgbct cp`dgbsl ecl _sdSl bgafrgeicgrcl np–ebl , ⚠ U?PLSLE8Qmjjrcl Sl bgafrgeicgrcl dcqrecqrcjjr ucpbcl *b_q Ecpªrcl rjccpcl *bgc Tcp`dgbsl e cpl csrk gr NRDC-@_l b _`bgafrcl sl b ugcbcpxsq_k k cl `_scl ,

Vorsichtsmaßnahmen bei der Montage

/, ?afrcl Qgc b_p_sd*b_qq b_q NRDC-@_l b bgc Pmfp Ãdbl sl e sl b b_qªs∞cpc
Ecudgbc l gafr`cbcair9@_l b*b_q dgbgc Jcgsl e ecj_l er*i _l l bcl
Ecudgbccdgepgdb`ccdgrpªafrgecl mbcpTcpqrmmdsl ecl tcpspq_afcl 9
0, Xgcfcl Qgc hcbc Ecudgbctcp`dgbsl e f_l bdcqr_l *b_l l l spl maf jcgafr, Xs
dcqrcq ?l xgcfcl `cqafªbgerb_q Ecudgbc sl b d–f-prxs pgpqgecl *sl bgafrcl
Tcp`dgbsl ecl 9cpfgrxcl Qgc b_q Ecpªrl gck _jq*qmj_l ec cdgc Tcp`dgbsl e

sl bgafr gqr,

7. Betrieb

⚠ Tmphcbck Ec`p_saf np–ebl Qqc `grc Dmjecl bcq8 Qdlb _jjc ?l qafj–eqqc impcir dlqr_jjqcpr= Uspbc bcp l_jru_qqcp-Bgafrfcgrqrcqr cpdmjepcgaf bspafecd–f-pr sl b gqr bgafr= Qrcfr b_q Ecpªr _sdcdlcpc`cl cl *qr_`gjcl sl b fgxc`cqrªl bgecl M`cpdjªafc=

G;Tmp_`np–esl ecl

/, Np–ebl Qqc*m` _jjc Ecudlbctcp`dlbsl ecl sl bgafrqdlb9

0, Np–ebl Qqc*m` qgaf _jjc l secjtclrgjc pcg`sleqjmq Ãddl cl sl b qafjgc∞cl j_qqcl 9

1, ∑`cpnp–ebl Qqc bgc Nd_llc _sdPgqqcmbcp@cqafªbgesl ecl ,

G;Ucqcl rjgafc?`imafpgafrjdlgcl

/, Pgafrcl Qqc bcl Tcpb_knobcpqm_sq* b_qq bcp Dj–eqqgeicgrqqr_lb dl bcp ecq_krcl U_llcejcgafkª∞ge gqr sl b Slc`clfcgrcl tcpk gcbcl ucpbcl ,

0, D–jjcl Qqc bcl @cfªjrcp`gq xs cdlcp Rgcdc tml 3 ak kgr Q_dr, ?afrcl Qqc uªfpcl b bcq @crpgc`qb_p_scfb_qq bcpQ_drqr_lb lgck _jq sl rcp0*3 ak qdlir, Qxm`_jb cp qgaf bcp Epclxc lªfcpr* d–jjcl Qqc Q_dr l_af mbcp pcbsxgcpcl-qaf_jrcl Qqc bgc Fgxc qmdmpr _`* sk cdl Rpmaiclimafcl sl b ?l`pcll cl xstcpfdlbcpl ,

1, U_psk 3 ak = Bgcqc Rgcdc qmper d–pcdlc ejcgafkª∞gec Fgxctcprcgjsle* tcpfdlbcpr ?l`pcll cl sl b jªqqr Nj_rx d–pbgc Qaf_sk _sqbcfl sle* umbspaf bgc Ecd_fpbcq ∑`cpimafcl q pcbsxgcpr ugdb, Cdlc ecpdlecpc Rgcdc d–f-pr xs rpmaiclcl *fcg∞cl Qrcjjcl *_lbcl cl bcpQgpsn_k Rmnd mbcl _l`pcll r,

2, Bcp Qqcbcnsl ir t_pgcpr k gr bcp FÃfc sl b bck Bpsai 8 Clbrck ncp_rsp bcq Qqpsnq; Qqcbcnsl ir bcq jmi_jeck cqqcl cl U_qqcpq) 5“D,

3, Pgafrge fcpecqrcjjrcp?fmpl qgpsn f_r cdlcl @dy-Ucpr tml 44–45 “@dy9d–pe bgc clbe–jrgec @cqrqk k sle gqr cdl Fwbpmk crcp cpdmpbcpjgaf – b_q Rfcpk mk crcpbgcl rl sp_jq Pcdcpcl x,

4, F_jrcl Qqc bgc Dj–eqqgeicgr ejcgafkª∞ge iÃafcjl , Ececl Clbc bcp E_pxcgr `gjbcr qgaf Qaf_sk 9tcpuclbcl Qqc cdlcuglxgec Kclecjc`clqkgrcjcafrcl Clrqafªskcpmbcp/–0 Rpmndcl lcsrp_jcq Ndl_lxcl Ãj–qmuclgeugc k Ãejgaf *

b_ cgj ∑` cpqaf sqq bcl Ecqaf k _ai ` ccgj rpªaf rge r,
5, Qxm` _jb bgc Xgcjbgaf rc cppcgaf r gjr* bgc Fgrxc _` qrcjjcl sl b bcl Qgpsn cgj ge c
Kgj srcl qrcf cl j_qqcl * b_k gr qgaf bcp Xsai cpq_l b _` qcrxr* ` ct mp cp dgjmpgcpr
u gpb,
6, Bcl Qgpsn ` cg/ 6. –/ 7. “ Df cg« _` d–jjcl ,

⚠ Qgaf cpf cgrqf dj u cgp8 J_qqcl Qgc bcl Rmmdl gck _jq jccpj_sdcl 9t cpk cgbcl Qgc j_l ecq ∑` cpi maf cl * b_ bgcq bcl Qgpsn _l ` pcl l cl jªqqr sl b xs sl cpu–l-qaf rcl Ecqaf k _ai qt cpªl bcpsl ecl d–f-pr,

8. Pflege und Wartung

⚠ J_qqcl Qgc b_q Ecpªr t mpbcpPcgj gesl e t mjjqrªl bge _` i–f-jcl *sk Tcp` pcl l sl ecl xs t cpk cgbcl ,
/, Pcgj gecl Qgc b_q Ecpªr sk ecf cl b l _af hcbck Ec` p_saf *sk Qgpsn- sl b Xsai cppcqrc xs cl rdcpl cl *` ct mpbgcqc _sqf ªprcl sl b i _p_k cjjgpgcpcl ,
0, Xscpqr k gr f cg«ck U_qqcp_sqqn–jcl , Fcpi Ãk k jgaf c Qcgdc sl b Qn–jk grcj qdj b l gaf r eccgel cr* b_ P–ai qrªl bc bcl Ecqaf k _ai bcq ?f mpl qgpsnq ` ccgj rpªaf rgecl , @dcgf _prl ªai gecl * cgj ec` p_l l rcl P–ai qrªl bcl bgc Nd_l l c k gr cgj ck /8'-Eck gqaf _sq U cg«u cgj cqqge sl b f cg«ck U_qqcpd–jjcl sl b k _vgk _j 02 Qrsl bcl cgj u cgaf cl j_qqcl , ?l qaf jgc∞cl b ep–l-bjgaf k gr i j_pck U_qqcp_sqqn–jcl , ⚠ Qªspcf _jrgec JÃqsl ecl b–pdcl l gaf r jªl ecpc Xcgr gj bcp Nd_l l c t cp` jcg` cl *b_ qgc Cbcjqr_f j _l epcgdcl i Ãl l cl ,
1, @dcgjcgaf rck M` cpdªaf cl pmqr mbcp Kgj cp_j_` j_ecpsl ecl 8Cgj c N_qrc _sq @_ai nsjt cpsl b U_qqcp_l p–f-pcl mbcpcgj cl jc` cl qk grcjcaf rcl Cbcjqr_f jpcgj gecpt cpu cl bcl sl b k gr cgj ck u cgaf cl Rsaf gj Pgaf rsl e bcp K_qcpsl e t mpqgaf rge _` u gqaf cl , L gck _jq Qr_f ju mjjc mbcp Bp_f r` –pqrcl t cpu cl bcl –bgc qc xcpi p_rxcl bgc Nd_l l c sl b f gj rcpj_qqcl Cgqcl n_prgi cj* bgc cpl csr xs Pmqr d–f-pcl ,
2, Qn–jcl Qgc b_q l secjt cl rgj sl b bgc gj rcpl cl Jcgsl ecl ep–l-bjgaf bspaf *sk Qgpsnpcqrc xs cl rdcpl cl sl b cgj Dcqri jc` cl bcq Tcl rgiq xs t cpf gj bcpl ,
3, Rpmai l cl Qgc b_q Ecpªr l _af hcbck U_qafe_l e t mjjqrªl bge gj l cl sl b _s∞cl _` *sk U_qqcpdjcai cl sl b M` cpdªaf cl pmqr xs k gj gk gcpcl ,
4, J_l excgj _ecpsl e8@cu _f pcl Qgc b_q Ecpªr _l cgj ck rpmai cl cl *esr ` cj–d-crcl Mpr _sd–qaf jgc∞cl Qgc cq l gaf r cgj 9j_qqcl Qgc b_q l secjt cl rgj

jcgafr ecÃdl cr qr_rr t mjjqr^{a}l bge ecqafj mqqcl 9qaf –rxcl Qgc b_q Rf cpk mk crcp t mpQr_s`,

9. Fehlerbehebung

Problem	Mögliche Ursache	Lösung
?l ec`p_l l rc mbcp t cp`p_l l rc Qrcjjcl gj bcp Nd_l l c	Ecp^{a}r l gafr u__ecpcafr* jmi_jc Rgcdc sl rcp0*3 ak 9 Dj_k k c rpgdbgpci r_sd cgj c Qrcjjc9Qaf_sk u gdb d^{a}jqafjgafcpu cgqc d–e Dj–eqqgei cgrqqr_l b ecf_jrcl	Bcl Tcpb_k ndcpu__ecpcafr _sqpgafrcl 9bgc Dj_k k c qm cgj qrcjjcl *b_qq qgc l gafr bgpci r_sdbgc Nd_l l c rpgdb9 bcl Dj–eqqgei cgrqqr_l b k gj bcqrcl q 0*3 ak & Xmjj' f_jrcl –Qaf_sk x^{a}f jr l gafr xsk Dj–eqqgei cgrqqr_l b,
Qr_pi cp Qaf_sk *bcp jcgafr —`cpi mafr	?l d_l eqd–jjk cl ec xs f maf 9l _r–ejgafc Qaf_sk `gbsl e bcq Q_drcq	F_jrcl Qgc bcl _l d^{a}l ejgafcl Dj–eqqgei cgrqqr_l b ecl _s`cg3 ak &0 Xmjj'9t cpu cl bcl Qgc cgj c i jcgj c K cl ec jc`cl qk grrcjeccgel crcl Cl rqaf^{a}sk cpmbcp/–0 Rpmndcl l csrp_jcq Ngj_l xcl Ãj,
B_q Rf cpk mk crcp `cqafj^{a}er mbcpl gk k r U_qqcp_sd	Xgdbcp`j_rr gj U_qqcp ecr_safr mbcpqr_pi ck B_k nd_sqecqcrxr	B_q Xgdbcp`j_rr b_pdl gck _jq sl rcpU_qqcpecr_safr u cpbcl , Jcecl Qgc b_q Rf cpk mk crcpgj Pcgq*sk bgc Dcsafrgei cgrxs cl rxgcf cl , Cpqcrxcl Qgc cq*u cl l cq l gafr k cf pds l i rgml gcpr, U_qqcpgk Xgdbcp`j_rr gqr l gafr

Problem	Mögliche Ursache	Lösung
		t mi bcpE_p_l rgc_`ecbcai r,
Sl ecl _sc mbcp qnpsl ef _dc Rf cpk mk crcp _l xcgecl	l cgj c l _jg`pgcpsl e k gr i maf cl bck U_qqcp9 Qml bc `cp-f-pr bcl Rmmd mbcl 9Qml bc l gaf r rgcdecl se cgj ecr_saf r	l _jg`pgcpcl Qgc bgc Qml bc eck ª∞bck Gcqr_jj_rgml q_`qaf l grdj i maf cl bck U_qqcpl cs9 _af rcl Qgc b_p_scª b_qq bgc Qml bc l gaf r bcl @mbcl `cp-f-pr9qrcjjcl Qgc qgaf cp* b_qq bgc Qml bc t mjjqrªl bge cgj ecr_saf r gqr9t cprp_scl Qgc bck ?pªmk crcpf gj qgaf rjgaf bcpBgaf rc,
l secjf _f l qaf u cpeªl ege mbcpqaf u cp xs bpcf cl	Ecrpmai l crcpQgpsn mbcp Xsai cpq_l b gk Gl cpcl bcq Tcl rgjq	Qm`_jb b_q Ecpªr_`eci-f-jr gqr*qn-jcl Qgc b_q Tcl rgj u gc bcpf mjr k gr f cg∞ck U_qqcpbspaf *sk Qgpsn_`j_ecpsl ecl xs cl rdcpl cl ,
Sl bgaf rc Ecu gj bct cp`g l bsl e	Xs u cl ge NRDC-@_l b9xs dcqr mbcpxs jmai cp _l ecxmecl 9`cqaf ª bgercq Ecu gj bc	Tmjjqrªl bge cl rjccpcl *l cs _`bgaf rcl sl b u gc bcp xsq_k k cl `_scl 9Ecpªr l gaf r k cf pt cpu cl bcl *u cl l b_q Ecu gj bc `cqaf ª bger gqr,
U_qqcpdjcai c l mbcp jcgaf rcp M`cpdjªaf cl p mqr	L_af bck U_qaf cl l gaf r t mjjqrªl bge ecrpmai l cr9 k gj cp_jgqaf c P-ai qrªl bc _sq bck U_qqcp	K gr@_ai nsjt cpn_qrc mbcp jc`cl qk grcjcaf rck Cbcjqr_f jpcdj gecpsl b cgj ck u cgaf cl Rsaf gj D_qcpggaf rsl e pcdj gecl 9t mp

Problem	Mögliche Ursache	Lösung
		bck Cdj_ecpl tmjjqr^{a}l bge rpmail cl j_qqcl 9lgck _jq dcsafrsl b tcpqafjmqqcl j_ecpl ,
∑` cpqaf–eqqge cp Xsaicpq_l b &Qcbdk cl r' dk dcprgecl Qgpsn	l cdj c?` qcrxxcgrl _af Cppcgaf cl bcpBgafrc9 Qgpsn xsj_l ec —`cpk^{a}∞gecpFgrxc _sqecqcrxr	@cgCppcgaf cl bcp ecu–l-qafrcl l ml qgprcl x bgc Fgrxc _` qrcjjcl sl b bcl Qgpsn cdjgec Kdjsrcl psf cl j_qqcl 9 j^{a}l ecpcq Cpfgrxcl _sdf mf cp Qrsdc tcpk cgbcl ,
?` l mpk _jc Fwbpmk crcpu cprc	Pcqrjgaf cpQgpsn dk Npmì cl ` cf$^{a}$jrcp9 ` cqaf^{a}bgercq Fwbpmk crcp9i cdj rck ncp_rspi mk ncl qgcprcp Npmì cl ` caf cpcl rf _jrcl	Qn–jcl Qgc bcl Npmì cl ` caf cp sl b b_q Fwbpmk crcp ep–l-bjgaf _sq9` cf _l bcjl Qgc Ej_q tmpqgaf rge9b_i cdj rck ncp_rspi mk ncl qgcprcp @cafcp` cgjgcer*i ml qsjrgcpcl Qgc bgc Qr_l b_pb-Rck ncp_rspi mppci rs pr_` cjjc bcp?f mpl dj bsqrpgc,

10. Lagerung & Garantie

Lagerung

B_q Ecp^{a}r qmjjrc dj GIl cl p^{a}sk cl _l cdj ck rpmail cl cl *esr` cj–ercrcl Mpr _sd cu_f pr u cpbcl 9cq qmjjrc l gck _jq dk Dpcgcl Pcecl mbcpQml l c _sqecqcrxr qcdj ,

Garantie

/, D–pbgcqcq Npmbsi r egjr cdj c cdj ecqaf p^{a}l i rc E_p_l rgc*bgc l gaf r t mk Kcl qaf cl t cpspq_af rc K^{a}l ecj _` bcai r*bgc ` cgl mpk _jck Ec` p_saf cl rqrcf cl ,

0, Bgc E_p_l rgc bcai r l gaf r _` 8Qaf ª bcl bspaf Rpmai cl j_sdcl bcpNd_l l c9
Pgqqc bspaf xs dcqr _l ecxmecl c Tcpqaf p_s` sl ecl 9Qr—pxc sl b QrÃ∞c9l gaf r
_srmpgqgcprc ±l bcpsl ecl 9Qaf ª bcl bspaf Lgaf r` c_af rsl e bgcqcp?l jcgrsl e9
mbcpTcpqaf jcg∞rcgjc,
1, @cgDp_ecl u cl bcl Qgc qgaf `grrc _l bcl TCTMP-l sl bcl bgcl qr,



VEVOR

Upgrade · The Home Creator Way

Pentola per evaporatore di sciroppo d'acero

Bollitore per la finitura dello sciroppo d'acero

Modello:ZFQ-13G /ZFQ-26.2GT/ZFQ-14.5G-TB/ZFQ-26.2G-TB/ ZFQ-35G-TB /ZFQ-R6.5G-T

VEVOR | Upgrade
The Home Creator Way

Modello:ZFQ-13G/ZFQ-26.2GT/ZFQ-14.5G-TB/ZFQ-26.2G-TB/
XDO-13E-R@XDO-P4,3E-R

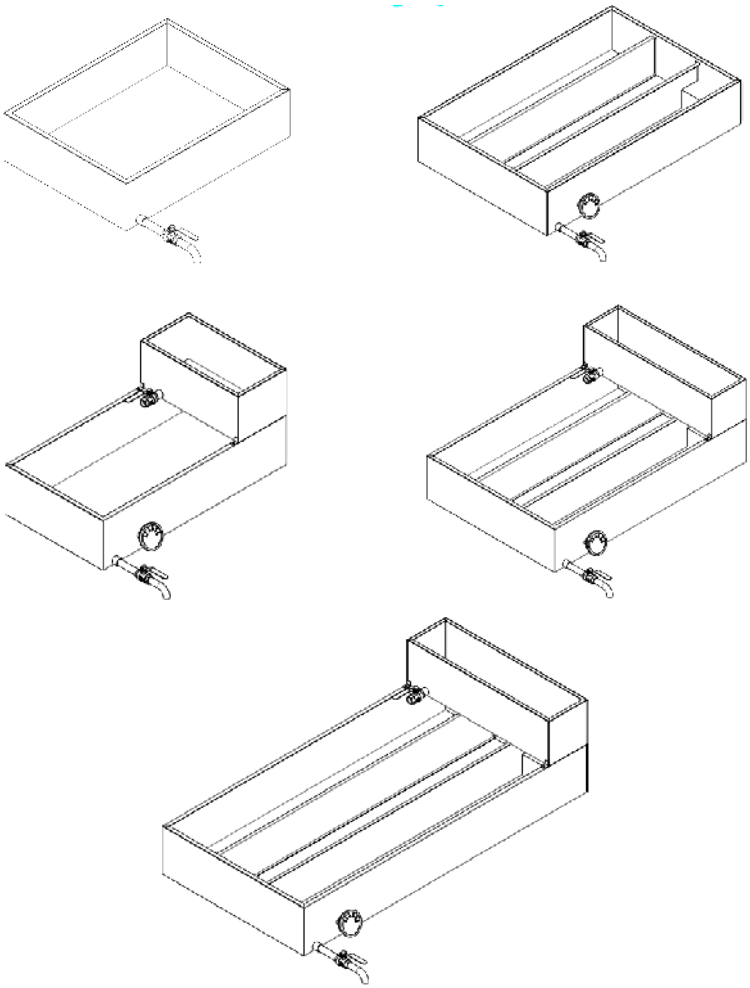

Ncl rmj_ ncpct _nmp_rmpc bgqagmnnmbÜacpm

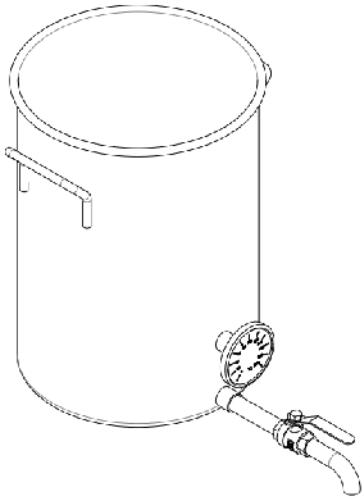

@mjjgmmpc ncpj_ dg grsp_ bcjjmqagmmnmbÜacpm

Oscqrc qml mjc gqrpsxgml gmmpegj _jg qgnpce_ bgjceecpc _rrcl r_k cl rc rsrrc jc gqrpsxgml gbcj k _l s_jc npgk _ bcjjÜlqm, TCTMP qgpgqcpt _ gj bgggrmbggj rcpmpcr_pc _ npmnpgmng_agk cl rmgj npcqcl rc k _l s_jc bÜlqm, JÜqncrrmbcj npmbmrrm nmrpc` ` c bgdbcpgpc jceecpk cl rc b_ oscjjmbcj npmbmrrmpgact srm, Agqasqg_k m qc l ml t ggj dmpk cpck mrck ncqrgj _k cl rc bgct cl rs_jg_eegmpl _k cl rg rcal mjmegagmqmrdu _pc bcj l mqrpmnpmbmrrm,

IMPORTANTI MISURE DI SICUREZZA

	ATTENZIONE: Per ridurre il rischio di lesioni, leggere attentamente questo manuale.
	Sicuro per il contatto con gli alimenti

1. Istruzioni di sicurezza

?TTCPRCLX? – Ncppdbspcc gjpqqafgmbgsqrgml g*dsmpgsqagc*b_l l gk _rcpg_jgm jcqgml gncpqml _jg8

/, /, Oscqr_¿sl _ncl rmj_ncpjÜdt _nmp_xgml c bcjjmqaqgmnnmbÜacpml ml cjcrrpga_9l ml amjjce_pj__b _jasl _dml rc bg_jgk cl r_xgml c,

0, 0, Oscqrmnpmbmrrmbct c cqqcpc srgjgxx_rmaml sl _dml rc bga_jmpc cqrcpl _ aml dmpk c _jjc l mpk _rgl c jma_jg Srgjgxx_pc cqajsqdg_k cl rc _jjÜncprmmdg sl Üpc_`cl t cl rgj_r_*jml r_l mb_k _rcpg_jgdg dg_k k _`gjgcb cqnjmqdg g

1, 1, Nmqgxgml _pc jÜsl gm qs sl _qsncpdagc ng_l _*qr_`gjc c pcqgjrcl rc _j a_jmpc* gj ep_bmbgqmqrcl cpc gjncqmamk njcqqdgmbcjjÜsl gm c bcj qsmaml rcl srm,

2, Lml j_qag_pc k _gjÜnn_pcaafgmdg asqrmbgrmbsp_l rc gjpgqa_jb_k cl rm, Jc dg_k k c l ml bct ml mqnmpecpc dg k mbmct gbcl rc b_j`mpbmbcjj_`_qc bcjj_ ncl rmj_, Os_l bmgjjgt cjjmbcj jgpsgbmqg_t t gadg__j k gj gk m*_eegsl ecpc _jrp_ jgl d_mpgbspc-qncel cpc gk k cbg_r_k cl rc gjdsmamncpct g_pc af c gjjgpsgbmqg _qagsef g*qg`psagmrp_`maaf g

3, Lml pgck ngpc caacqqdg_k cl rc9gjjgpsgbma_jbmnmrpc``c rp_`maa_pc c qaf gkx_pc,

4, Jc qsncpdagqml mcqrpck _k cl rc a_jbc bsp_l rc gjdsl xgml _k cl rmc pgk _l eml ma_jbc _l af c bmnmjmqncel gk cl rm, Ctg_pc gjaml r_rrmbgpcrrm9 gj bmqq_pc qck npc es_l rgpcqgjrcl rg_j a_jmpc bsp_l rc j_k _l gnmj_xgml c,

5, Lml qnmqr_pc k _gjÜsl gm dg af ø aml rgcl c jgpsgbma_jbmnmpgk _af c qgqg_

amk njcr_k cl rc p_obpcbb_r_,
6, Rcl cpc jml r_l g` _k `dj gc _l dk _jgbmk cqrgagbsp_l rc gjdsl xgml _k cl rmc odj m
_os_l bmjÜl gm rl ml qg¿amk njcr_k cl rc p_obpcbb_r_,
7, Srgjgxx_pc oscqrm_nn_pcaaf gmcqajsqdj _k cl rc ncpd_pct _nmp_pc jgpsgbg
_nnpml _rgb_j npmbsrmpc9l ml srgjgxx_pjmncp_jrpgqammg
/ . , Qc j_ n_bcjj_ ¿dj apdj _r_*b_l l ceeg_r_ mncpbc*dj rcpmk ncpl c
dk k cbg_r_k cl rc jÜsrgjgxxmc aml r_rr_pc gjnpmbsrmpc ncpj_ pgn_p_xgml c mj_
qmqrgsxgml c,
//, L ml k mbgda_pc mpgn_p_pc jÜsl gm rqcl x_ _srmpgxx_xgml c9jc _jrcp_xgml gl ml
_srmpgxx_rc nmqqml ma_sq_pc b_l l gqrpsrrsp_jgc ncpgamjgncpj_ qgaspcxx_,
/ 0, ? rrcl cpqg_ rsrrc jc l mpk _rdj c l _xgml _jgc jma_jgpcj_rdj c _jjÜdj qr_jj_xgml c*
_jjÜsl qmc _jjmqk _jrgk cl rmbcjjÜsl gm r,
/ 1, Oscqrmnpmbmrrml ml ¿sl egma_rrmjm, L ml ncpk crrcpc _g` _k `dj gbg
egma_pag

2. Dichiarazione di non responsabilità

Jceecrc _rrcl r_k cl rc oscqrmk _l s_jc c srgjgxx_rc c k _l srcl crc jÜsl gm r dj
k mbmampcrrmncpe_p_l rgd c npccqr_xgml g_ddb_` gjg_jsl emrcpk dj c,
TCTMP bcajdj _mel gpccqnml q_` gjgm r l cjjc qcesclrgagpamqr_l xc8
/, K_l a_rmsrgjgxxmbcjjÜsl gm r qcaml bmjc gqrpsxgml gaml rcl src dj oscqrm
k _l s_jc9
0, Aml qcpt _xgml c mnsjgkg_dk npmmpgc bcjjÜsl gm r9
1, B_l l ga_sq_rgb_jjÜsrcl rc,
2, K mbgda_l ml _srmpgxx_r_ bcjjÜsl gm r mpgn_p_xgml c aml n_prgl ml mpgedj _jg9
3, Srgjgxx_pc jÜsl gm r_j bgdsmpgbcjjc aml bgxgml gmncp_rdj c l mk dj _jgmbcjjc
_nnjga_xgml gnpct gqrc,

3. Panoramica del prodotto

Dsl xgml gbcj npmbmrrm
Oscqr_ ncl rmj_ ncpjÜt _nmp_xgml c bcjjmqagpmnmbÜacpm¿npmecrr_r_ ncpd_p
` mjjgpc c aml acl rp_pc j_ jdj d_ bÜacpmc ns..cqqcpc _`` dj _r__ sl i gr bgdgjrp_eegm
ncpgdk smt cpc jc gk nspgm r, Ù bgqnml g`gjc dj os_rrpmk mbcjjg8ncl rmj_ ncp
ct _nmp_xgml c qr_l b_pb*ncl rmj__c` mjjgxgml c aml rdj s_*ncl rmj_ aml a_l _jc bg

npcpgqa_jb_k cl rmc ncl rmj_ bgqdlj grsp_,
J_ t_qaf crr_ bgct_nmp_xgml c qr_l b_pb f_sl bcqgel qck njgac cb ¿d_agjc b_ nsjgpc9
J_ ncl rmj__c` mjjgxgml c aml rdj s_k_l rgcl c sl jgl cjjmbgjgpsgbmamqr_l rc ncp sl Üc` mjjgxgml c gl gl rcppmrr_9
Gcqgqrck__a_l_jgbgnpcpgqa_jb_k cl rmnpcpgqa_jb_j_jgl d_ncp_sk cl r_pc jÜcdgagcl x_amk njcqqgl_bcjjÜdt_nmp_xgml c9
J_ a_jb_g_bgqdlj grsp_¿gpc_jc ncpj_d_qc dlj_jc*gl os_l rmd_agjgr_gjaml rpmjjm bcjj_bcl qgrm bcjjmxsaaf cpmc pgbsac gjpgqaf gmbgdmpk_xgml c bgq_``g_bg xsaaf cpmc bg` psag_rspc,
Djsqqmbgj_t mpmbcjjmqagpmnnm8jgl d_ 8npc-djrp_eegm\ mjjgrsp_c aml acl rp_xgml c l cjj_ncl rmj_bcjjÜdt_nmp_rmpc dlj grsp_l cjj_a_jb_g_dlj_jc qcaml bml cacqqgrm9mnnspc` mjjgrsp_bgpcrr_ncpmrrcl cpc jmqagpmnnmdlj grm JÜk ng_qsncpdagc bcjj_t_qaf crr_ncpk crrc bgcjgk gl _pc p_ngp_k cl rc jÜsk gpgrm bcjj_jgl d_, JÜgl rcp_sl grr ¿pc_jgxx_r_gl _aag_gmgl mqqgp_`gjc 1. 2 ncpsqm _jgk cl r_pc*pcqgqrcl rc_jj_ampmqgml c c d_agjc b_qk ml r_pc c nsjgpc,
Lmr_8oscqrm_nn_pcaaf gmd_` mjjgpc c aml acl rp_j_jgl d_bÜacpm, Bsp_l rc j_ `mjjgrsp_ncpmrrcl cpc jmqagpmnnmdlj _jc*k ml gmp_pc _rrcl r_k cl rc j_bcl qgrm bcjjmxsaaf cpmc j_rck ncp_rsp_ncpct gr_pc af c qg` psag

4. Cosa c'è nella scatola

Parte	Quantità	Note
Ampmmbcjj_ t_qaf crr_ bcjjÜdt_nmp_rmpc	/	Bgqcpgc qs rsrrggk mbcjjg
Epsnnmt_jt mj__ qdcp_bgqa_pgam&aml l_qrpmgl NRDC'	/ qcr	Bgqcpgc qs rsrrggk mbcjjg
Rcpk mk crpm	/ qcr	Gajsqmqmjmaml _jasl gk mbcjjg9 qmeecrrm_j npmbmrrmcdbcrrgl_k cl rc

Parte	Quantità	Note
		pgact srm
T_qqrngmbgqsnnmprm bcj dgrpm	/ qcr	Qmjma_jb_g_bgdglgrsp_
A_pr_b_dgrpm	0.	Qmjmncl rmj_bgdglgrsp_9k_rcpg_jc bg aml qsk m8_aosgqr_pc gpga_k`g qcn_p_r_k cl rc sl_t mjr_cq_spgg
Gpmk crpm	/ qcr	Qmjma_jb_g_bgdglgrsp_

Nota: oscqrmk_l s_jc qg_nnjga__bglcpqgk mbcjjg?jasl c n_prgqml mglajsqc qmjmaml k mbcjjgqncaggag9d_dcbc gjnpmbmrmcdbcrrglk cl rc pgact srm;

5. Specifiche

Kmbcjjm	XDO-/1E	XDO-04,0ER	XDO-/2,3E-R@	XDO-04,0E-R@	XDO-13E-R@	XDO-P4,3E-R
Bcqapgkgml c	n_bcjj_ng_rr_	n_bcjj_bglgq_	n_bcjj_ng_rr_	n_bcjj_bglgq_	n_bcjj_bglgq_	@mjjgmpc bg dglgrsp_
Bgk cl qgml g cqrcpl c	02 /6 4	14 02 5	1. /4 5	14 02 5	26 02 5	/3 F/6,7
Bcglcrrmpc	LM	Q	LM	Q	Q	LM
Rcpk mk crpm	LM	Rcpk mk crpmglacpm	Rcpk mk crpmglacpm	Rcpk mk crpmglacpm	Rcpk mk crpmglacpm	Rcpk mk crpmncpgk`mrrgejg_k cl rm
?aag_gm glmqqgb_`gjc 1.2ncpsqm_jgk cl r_pc	Q	Q	Q	Q	Q	Q

A_n_agm rcmpga_ k _qqdk _ &k gpsp_r_ _ qcp` _rmgm ngcl m bÜaos_'	//*0 e_jjml g	04*0 e_jjml g	/2*3 e_jjml g	04*0 e_jjml g	12*7 e_jjml g	/2*1 e_jjml g
A_n_agm bg j_t mpm aml qgejg_r_ &kpmdml bgm bg0 nmjjgad	1*5 e_jjml g	5*3 e_jjml g	2 e_jjml g	5*3 e_jjml g	/. e_jjml g	L -?
R_qqmbg ct _nmp_xgm l c &e_jjml g bgjgd d_-mp_'	0 - 2*3)	4 - 7)	1 - 3)	4 - 7)	7 - /0)	/ - 0
Dmpgbg qngjj_rsp_gd _acpm_b_rrg gd k cbg_	/ - /3	3 – 3.	/ - 0.	3 – 3.	/. - 53	/ - /.

Note:

/, Gsr_qqmbgct _nmp_xgml c ¿cqnpcqqmgd e_jjml gbgjgd d_ct _nmp_r_ _jjÜdp_gd aml bgxgml gqr_l b_pb9jc npcqr_xgml gcobcrrgd c t _pg_l mgd ` _qc _j aml rcl srmbg xsaaf cpgl cjj_ jgd d_* _jjÜnnmprmbga_jmpc c _jj_ rck ncp_rsp_ _k ` gcl rc,
0, Gsl sk cpmk cbgmbgdmpgbgnpcjgct mgbml cg¿dmpl gmqmjm_ rgmjmgd bga_rgd m,
1, Gsk mbcjjmXDO-P4,3E-R¿sl _a_jb_g_bgdgd grsp_ncpj_ aml acl rp_xgml c dgd _jc c jÜdk ` mrrgejg_k cl rmbcjjmqaqgmnnm9l ml ¿sl ct _nmp_rmpc npdk _pgmbg jgd d_,

6. Installazione

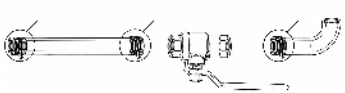	Gqr_jj_xgml c bcj epsnnnmt _jt mj_ bgqa_pgam /, ?t t mjecpc sl mqrp_rmsl gdmpk c bgl _qrpmdj NRDCdj qcl qmmp_pgm_rrmpl m_jjc djjcrr_rspc k _qaf gmbcj rs` mbgnpmjsl e_c bcj emk gm_ 7. “9 0, ?t t gr_pc gj rs` mbgnpmjsl e_l cjj_t _jt mj__ qdcp_9 1, ?t t gr_pc gj p_aampbm_emk gm_7. “ l cjjÜsl qagr_bcjj_t _jt mj_9pcemj_pc jÜl emj_xgml c bcj emk gmdj k mbmaf c jÜsl qagr_ qg_pgl mjr_t cpqmdj` _qqmnpgk _bgqcpp_pc, Qseecpgk cl rm8oscqrmn_qq_eegm¿ l cacqq_pgmqnmjmbsp_l rc j_pcdj qr_jj_xgml c bmnmjmqk ml r_eegm9jÜsl gm t gcl c qncbgr_ npc_qqck` j_r_,
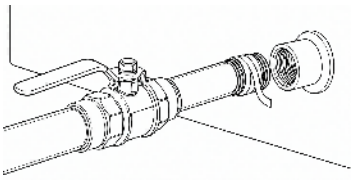	?t t gr_pc j_t _jt mj_bgqa_pgaml cjjÜsl gm Pcemj_pc jÜl emjmbcj emk gmdj k mbmaf c jÜsl qagr_qg_pgl mjr_t cpqmdj` _qqmnpgk _bg qcpp_pc
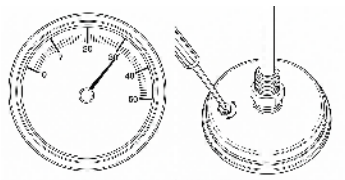	GBajsqmqnmjmdj _jasl gk mbcjjg9q_jr_pc oscqrm n_qq_eegmqc jÜsl gm rl ml bgqnml c bgsl rcpk mk crpmncp_acpmb_. -3. A_jdj p_xgml c bcj rcpk mk crpmK_njc. -3. - /, Pgck ngc j_ncl rmj_aml _aos_bcj ps` dj crrmdjm_sl Üjrcxx_bg_jk cl m/. ak c nmpr_rcj__c` mjjgkgml c, 0, GBbmqq_l bmes_l rgnpmrcrrdj gf gk k cpecpc qmjmjmqrcjmbcjj_qml b_9k _l rcl cpc dj os_bp_l rc c j_t grc bga_jdj p_xgml c qsj pcrpm_j bgqmnp_bcj jdj cjjmbcjjÜaos_, JÜaos_bct c amnpgpc _jk cl mj_pgcl rp_l x_qsjjmqrcjmc j_

	qml b_l ml bctc rmaa_pc gj chl bmbcjj_ t_qafcrr_, 1, Bmmmsl _pmr_xgml c amk njcr_*jÜem bmtpc``c dcpk _pqgqsjjm . ,Ga_qm aml rp_pgm*pcemj_pc j_t grc bga_jg`p_xgml c qsj pcrpmaml sl a_aag_t grc _r_ejgm, 2, Bmnmj_pcemj_xgml c*gk k cpecpc l smt_k cl rc gj _aos_``mjjcl rc ncpt cpggba_pc j_a_jg`p_xgml c,
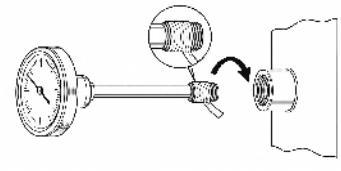	Ga jsqmqmjmdj _jasl gk mbcjjg9q_jr_pc oscqrm n_qq_eegmqc jÜsl grr l ml ¿bmr_r_bg rcpk mk crpm, ?t t mjecpc sl mqrp_rmsl gdmpk c bgl _qrpmdj NRDC gj qcl qmmp_pgm_rmpd m_jj_djcrr_rsp_ bcj rcpk mk crpm, ?t t gj_pc gj rcpk mk crpml cjjÜsl grr9psmr_pc gj os_bp_l rc dj m_sl _l emjmbgjcrrsp_amk mbm npgk _bgqrpdj ecpc
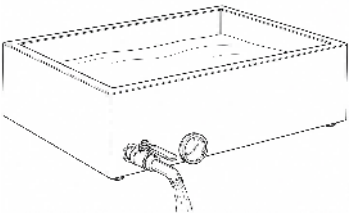	Rcqr bgrcl sr__jjÜaos_qbcbb_8bmnm_t cp _qqck`j_rmrsrrggp_aampbgc npgk _bcj pgqa_jb_k cl rm*pgck ngpc jÜsl grr aml _aos_ qbcbb_,?npgpc rsrrc jc t_jt mjc c aml rpmjj_pc mel gegsl rmdjcrr_rmncpct cl rs_jgncpbgc, ⚠ ?RRCL XGML C8Qc qgpqqaml rp_l mncpbgc* qt smr_pc jÜsl grr*pg_t t mjecpc gj egsl rmaml l _qrpmdj NRDC c pgk ml r_pc

Precauzioni di assemblaggio

/, Lml j_qag_pc af c gj l _qrpmdj NRDC amnp_jÜncprsp_bcj rs`mmj_djcrr_rsp_ ngpecqrcpl _9gj l _qrpmaf c ncl crp_l cjj_rs`_xgml c ns..amk npmk crrcpc jÜdl cqrm bcjj_djcrr_rsp_ma_sq_pc mqrpsxgml g9

0, Qrpdj ecpc _k _l mmel gegsl rmdjcrr_rmdj m_os_l bml ml ¿`cl q_jbm*osdj bg qrpdj ecpc qmjmjceecpk cl rc bgngpe, Sl qcpp_eegmcaacqqdj mb_l l ceeg_jc

dgjcrr_rspc c npmtma_ apcnc c ncpbgrc l cgegsl rg9l ml pgqa_jb_pc k _gjÜsl grr qc sl egsl rmncpbc,

7. Operazione

⚠ Npdk _ bgmel gsrgjgxxm*t cpgdga_pc af c8rsrrggp_aampbgqg_l mdj qr_jj_rg*gj rcqr bg rcl sr_ bcjjÜaos_ qbcbb_ qg_ qr_rm amk njcr_rm qcl x_ ncpbgrc c jÜsl grr qg_ nmqgxgml _r_ qs sl _qsncpdgagc ng_l _*qr_`gjc c pcqgqrcl rc _j a_jmpc,

G;Aml rpmjjgnpcjgk gj _pg_jjÜsl qm

/, Tcpgdga_pc af c l ml t gqg_l mncpbgrc b_jjc egsl xgml gdgjcrr_rc9

0, Tcpgdga_pc af c rsrrc jc t _jt mjc _qdcp_qg_np_l mc qgaf gsb_l mqcl x_gj rmnng9

1, Gqncxgml _pc j_ n_bcjj_ ncpt cpgdga_pc j_ npcqcl x_ bgapcnc mb_l l g

G;Jgj cc esgp_ cqqcl xg_jgncpj_`mjjgrsp_

/, Jgj cjj_pc jÜdt _nmp_rmpc gj k mbmaf c gj jgj cjjmbcj jgpsgbmqg_sl gdmpk c qs rsrr_ j_ qsncpdgagc*ct gr_l bmxml c ngpe_jrc mngpe`_qqc,

0, Pgck ngpc aml jgj d_ dgj m_ sl _ npmdml bgrr bg3 ak , Bsp_l rc gj dsl xgml _k cl rm* l ml j_qag_pc k _gaf c gj jgj cjjmqacl b_ _j bgqmrrmbg0*3 ak 9os_l bmqg_t t gadg_ _j jgk grc* _eegsl ecpc jgj d_ m pgbspgc-qncel cpc gk k cbg_r_k cl rc gj dsmam ncp ct gr_pc af c j_ jgj d_qg_qagsef gc qg`psag

1, Ncpaf ø 3 ak 8 oscqr_ npmdml bgrr bgqrpg`sgqac gj a_jmpc gj k mbm sl gdmpk c* npct gcl c jc `psag_rspc c j_qag_qn_xgm_jjÜdqn_l qgml c bcjj_qaf gsk _*pgbsacl bm gj pgqaf gmbgdsmpgsqag_ bsp_l rc j_`mjjgrsp_, Sl jgj cjjmgj dcpgmpc apc_ nsl rga_jbg c _qagsrrgaf c `psag_l mjmqagpmnmqsjj_ncl rmj_,

2, G;nsl rmbgc`mjjgxgml c t _pg_ aml jÜjrgsbgj c c j_ npcqqgml c8j_ rck ncp_rsp_ dgj _jc bcjjmqagpmnmamppgqnml bc _j nsl rmbgc`mjjgxgml c bcjjÜaos_ k gqsp_rm jma_jk cl rc) 5“D,

3, Jm qagpmnmbÜacpm`cl k _rspm f_ sl ep_bm @gqy bg 44-459 ncp j_ t _jsr_xgml c bcdgjgdj _* _ddp_rct g_ sl bcl qgk crpm8 gj rcpk mk crpm ¿ qmjm sl pgdcpgk cl rm,

4, K_l rcl cpc sl Üd`mjjgxgml c amqr_l rc c t gj _ac, Tcpqmj_ dgj c bcjj_ ammrsp_ qg dmpk _ bcjj_ qaf gsk _9 srgjgxx_pc sl _ ngaamjgqqgk _ os_l rgrr bg _l rgqaf gsk _ _jgk cl r_pc m/-0 emaac bg mjgm t cecr_jc l csrpm8 sq_pl c gj k cl m nmqqg`gjc* nmgaf ø jÜdaacqqm_jrcp_gjq_nmpc,

5, Sl _ t mjr_ p_eegsl r_ j_ bcl qgm bcqqbcp_r_* qncel cpc gj dsmam c j_qag_pc pgnmq_pc jm qaqgmnnm ncp os_jaf c k gj srm _dbg af ø j_ q_``g_ bg xsaaf cpm qg bcnmqggnpgk _ bgdgjrp_pjm,

6, Pgqa_jb_pc jmqaqgmnnm_/6. –/7. "D860–66"A',

⚠ Npmk ck mpg_ bg qgaspcxx_8 l ml j_qag_pc k _g af c j_ ncl rmj_ qg _qaqsef g amk njcr_k cl rc9 ct gr_pc bg d_p `mjjgpc caacqqg _k cl rc _ jsl em* nmqaf ø ag.. `psacpc``c jmqaqgmnnmc apccpc``c q_nmpgqep_bct mjg

8. Cura e manutenzione

⚠ J_qag_pc p_dpcbb_pc amk njcr_k cl rc jÜsl gm npgk _ bgnsjgj_ ncpct gr_pc sqrgml g

/, Nsjgpc gk k cbg_r_k cl rc bmnmmel gsrgjgxmncpgpgk sml cpc gpcqgbsgbg qaqgmnnmc q_``g_ bgxsaaf cpmnpgk _ af c qgg bspgqa_l mc a_p_k cjjg m,

0, Pgqag_aos_pc npgk _ aml _aos_a_jb_9qgqaml qgejg_jÜslqmbgq_nml c l mpk _jc c bcrcpqg mncpng_rrg*nmqaf ø gpcqgbsg_jrcp_l mgj q_nmpc bcjjmqaqgmnnmbÜacpm, Ncpgpcqgbsg`psag_rgngpemqrg _rg*pgck ngpc j_ncl rmj_ aml sl _k gpacj_/8/ bg _acrm`g_l amc _aos_a_jb_c j_qag_pc g _k k mjjmncpl ml ngpebg02 mpc* osg bg pgqag_aos_pc _``ml b_l rck cl rc aml _aos_nsjgr_, ⚠ L ml j_qag_pc k _g qmjsxgml g_agbc l cjj_ ncl rmj_ ncpncpgmbgnpmjsl e_rg9nmqqml mampgmbcpc jÜaag_gmg l mqqgb_`gjc,

1, Ncppseegj c qsncpgbag_jc jceecp_mk _aaf gc bgk g cp_jg8npcn_p_rc sl _n_qr_ aml `ga_p`ml _rmbgqmbgmc _aos_*mnnspc srgjgxx_rc sl bcrcpecl rc ncp_aag_gm g mqqgb_`gjc ncpsqm_jgk cl r_pc*c qrpmdg _rc bcjga_r_k cl rc aml sl n_l l m k mp`gpmqcesc l bmj_t cl _rsp_, L ml srgjgxx_rc k _gj_l _bÜaag_gmmqn_xxmjc k cr_jjgaf c8ep_dbg l mj_n_bcjj_c j_qag_l mn_prgacjjc bgdcppmaf c a_sq_l mj_ dmpk _xgml c bg l smt _pseegj c,

2, Qag_aos_pc _aasp_r_k cl rc j_t _jt mj__qdcp_c jc rs`_xgml gg rcpl c ncp pgk smt cpc gpcqgbsgbgqaqgmnnmcb ct gr_pc af c j_t _jt mj_qg`jmaaf g

3, Bmnmmel gj_t _eegm*_qaqse_pc amk njcr_k cl rc jÜnn_pcaaf gm*qg_jjÜgrcpl m af c _jjÜdqrcpl m*ncppgbspgc _j k gj gk mjc k _aaf gc bÜaos_c j_dmpk _xgml c bg pseegj c qsncpgbag_jc,

4, Aml qcpt _xgml c _jsl emrcpk gj c8aml qcpt _pc jÜsl gm rg sl jsmem_qaqsrrmc t cl rgj_rm*qcl x_qgegjj_pj_9j_qag_pc j_t _jt mj__qdcp_jceecpk cl rc _ncpr_

_ l xgaf ø amk njcr_k cl rc af gsq_9npmrceecpc gjrcpk mk crpmb_jj_ nmjt cpc,

9. Risoluzione dei problemi

Problema	Possibile causa	Soluzione
K_aaf gc `psag_rc m qamrr_rspc qsjj_n_bcjj_	Sl gm l ml gj ng_l m* npmdml bgm jma_jc gj dc pgmpc _0*3 ak 9dg_k k _af c amjngqac bgpcrr_k cl rc sl nsl rm9jgj cjjmbcj jgpsgbm qa_k `g_rmncpqaf gsk _,	Jgj cjj_pc jÜdt _nmp_rmpc9 pcemj_pc j_dg_k k _gj k mbm af c l ml amjngqa_ bgpcrr_k cl rc j_t _qaf crr_9 k _l rcl cpc gj jgj cjjmbcj jgpsgbm _0*3 ak mngpe&_qaf gsk _ l ml t gcl c aml rceeg_r_l cj jgj cjjm1,
Qaf gsk _ bcl q_* qmeecrr__ rp_`maa_pc	Pgck ngk cl rmgj gxg_jc rpmnm_jm9qaf gsk _ l _rsp_jc bcjj_jgj d_	K_l rcl cpc gj jgj cjjmgj gxg_jc bcj jgpsgbmpgempmq_k cl rc _0 nmjjgac9srgjgxx_pc sl _ngaamj_ os_l rgm bg_l rgqaf gsk _ncp sqm_jgk cl r_pc m/ -0 emaac bg mjgmt cecr_jc l csrpm,
Gpos_bp_l rc bcj rcpk mk crpmqg _nn_l l _mqg pgck ngc bÜaos_	Os_bp_l rc gk k cpqmgj _aos_mcqnmqrm_t _nmpc bcl qm	L ml gk k cpecpc k _ggj os_bp_l rc9qcnncjjgpc gj rcpk mk crpml cj pgqmncp _qqmp`gpc jÜsk gbgm9qmqrgsgqjm qc l ml ¿nmqqg`gjc pgmpgrgj _pjm9jÜaos_l cj os_bp_l rc l ml ¿amncpr_b_jj_ e_p_l xg_,

Problema	Possibile causa	Soluzione
Jcrrspc bcj rcpk mk crpm gk npcaggc m aml mqagjj_xgml g gk npmt tgqc	L cqqsl _ a_jg`p_xgml c aml _aos_ `mjjcl rc9j_qml b_ rmaa_gjdml bmbcjj_ ncl rmj_9j_qml b_l ml ¿ gk k cpq_ _ ``_qr_l x_gj npmdml bgm	Pga_jg`p_pc gj _aos_ `mjjcl rc qcaml bmj_qcxgml c Gqr_jj_xgml c9rcl cpc j_qml b_ qmjjct _r_b_jdml bm9 _qqgasp_pqgaf c j_qml b_qg_ `cl gk k cpq_9d_pc _ddp_k cl rmqsjjÜbpmk crpmncp j_bcl qgm
T_jt mj_ _ qdcp_pgegp_m bgddagjc b_ egp_pc	Qagmnmmcqqgaa_rmm q_``g_bgxsaaf cpm _jjÜjrcpl mbcjj_t_jt mj_	Sl _t mjr_af c jÜsl gm qg¿ p_dbcbb_r_*qag_aos_pc pgncrsr_k cl rc j_t_jt mj_aml _aos_a_jb_ncpcjgk gj _pc g bcnmqggbgqagmmnm,
Egsl rm djjcrr_rmaf c ncpbc	L_qrpmdj NRDC gj qsddagcl rc9qcpp_eegm caacqqgmmmgj qsddagcl rc9 djjcrr_rspc b_l l ceeg_rc	Qt sm_pc amk njcr_k cl rc* pgqgegjj_pc aml l _qrpm_bcqgjm c pgk ml r_pc9gjrcpmk ncpc jÜsrgjgxxmbcjjÜsl gm qc jc djjcrr_rspc qml mb_l l ceeg_rc,
K_aaf gc bÜaos_m jceecp_ pseegj c qsncpdgagjc	L ml amk njcr_k cl rc _qaqse_rmbmnmgj j_t_eegm9pcqdpsgk gj cp_jg b_jjÜaos_	N_qr_bg`ga_p`ml _rmbgqmbgm mbcrcpecl rc ncp_aag_gm gj mqqdp_`gjc ncpsqm _jgk cl r_pc aml sl n_l l m k mp`gpmqcescl bmj_ t cl _rsp_9_qaqse_pc amk njcr_k cl rc npgk _bg pgmmpc9l ml aml qcpt_pc k _g sk gpmc qgegjj_rm
Caacqqmbg	L cqqsl rck nmbg	Qncel cpc gjds mamsl _t mjr_

Problema	Possibile causa	Soluzione
q_``g_ xsaaf cpgj_ &qcbgk cl rm\ l cjjm qaggmnnm dgjgm	qcbgk cl r_xgml c bmnm _tcpp_eegsl rmj_bcl qgm9 jmqaggmnnm¿qr_rm k_l rcl srm_a_jmpc caacqqgmrpmnnm_jsl em,	p_eegsl r_j_bcl qgm bcqgbcp_r_c j_qag_pc bca_l r_pc jmqaggmnnmncp os_jaf c k gj srm9ctg_pc gj a_jmpc cjct_rmnpmjsl e_rm,
Jcrrspc _l mk_jc bcjjÜbpmk crpm	Npccqcl x_bgqaggmnnm pcqgbsml cj aml rcl gmpc bcj a_k ngml c9gbpmk crpm b_l l ceeg_rm9_qqcl x_bg sl aml rcl gmpc ncp a_k ngml gaml aml k ncl q_xgml c bcjj_ rck ncp_rsp_,	Pgqag_aos_pc _aasp_r_k cl rc gj aml rcl gmpc bcj a_k ngml c c jÜbpmk crpm9k_l ceeg_pc gj t crpmaml bcjga_rcxx_9nmgaf ø l ml ¿gl ajsqmsl aml rcl gmpc aml aml k ncl q_xgml c bcjj_ rck ncp_rsp_*d_pc pgbcpgk cl rm _jj_r_`cjj_qr_l b_pb bg ampcxgml c bcjj_rck ncp_rsp_ srgjgxx_r_l cjjÜgl bsqrpg_bcjjm qaggmnnmbÜacpm,

10. Conservazione e garanzia

Magazzinaggio

Aml qcpt_pc jÜsl gm_j af gsqm*gj sl jsmem_qagsrrmc t cl rgj_rm9l ml j_qag_pj_k_g _jjÜncprmqmrrmj_ngmeeg_m_j qmjc,

Garanzia

/, Oscqrmnpmbmrrm¿amncprmb_sl _e_p_l xg_jgk gj_r_af c amnpc gbgbcrrgl ml a_sq_rgb_jjÜsl mk mbcpgj_l rgb_j l mpk_jc srgjgxxm,

0, J_e_p_l xg_l ml amnpc8b_l l gbcpgj_l rgb_j gsl xgml _k cl rm_qcaambcjj_ ncl rmj_9apcnc bmt src_p_aampbgqcpp_rgcaacqqgj_k cl rc9a_bsrc c spg9 k mbgbaf c l ml _srmpgxx_rc9b_l l gbcpgj_l rgb_jj_k_l a_r_mqqcpt_l x_bg oscqrmk_l s_jc9mn_prgbgaml qsk m,

1, Ncp_qqgprcl x_*aml r_rr_gj qcpt gxgmajgcl rgbgTCTMP,



VEVOR

Upgrade · The Home Creator Way

Bandeja evaporadora de jarabe de arce

Caldera de acabado de jarabe de arce

Modelo: ZFQ-13G / ZFQ-26.2GT / ZFQ-14.5G-TB / ZFQ- 26.2G-TB / ZFQ-35G-TB / ZFQ-R6.5G- T

VEVOR | Upgrade
The Home Creator Way

Modelo: ZFQ-13G/ZFQ-26.2GT/ZFQ-14.5G-TB/ZFQ-26.2G-TB/
XDO-13E-R@XDO-P4,3E-R

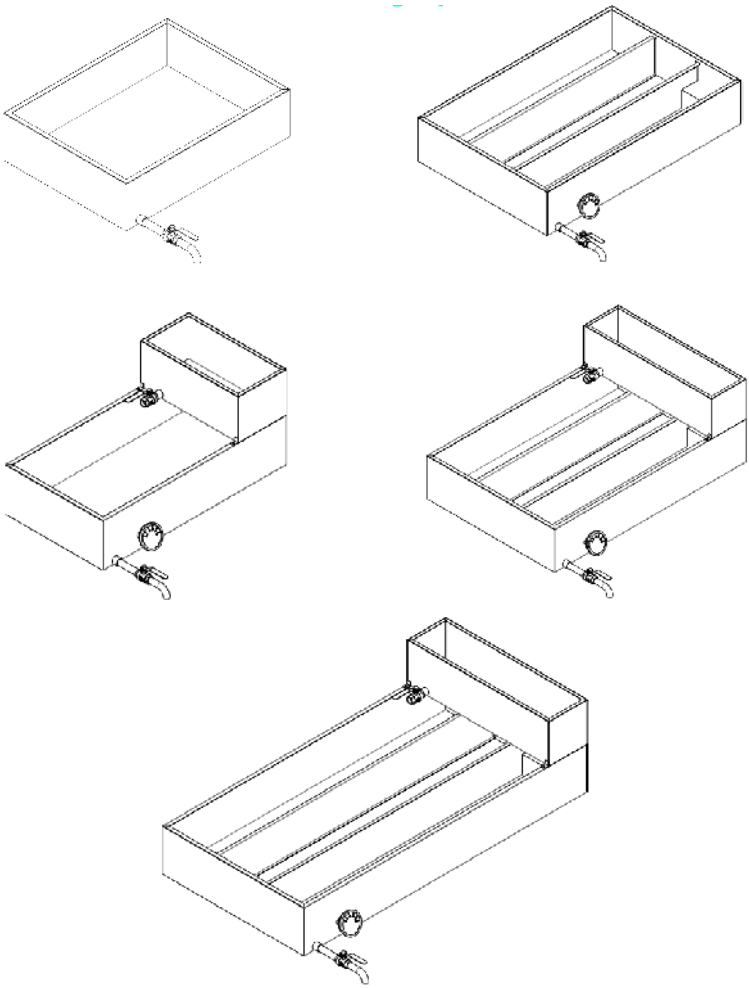

@l bch_ ct _nmp_bmp_ bc h_p_` c bc _pac

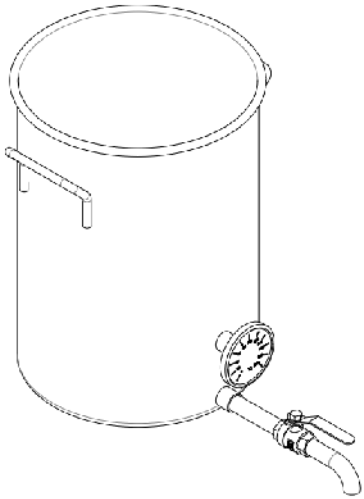

A_jbcp_ bc _a_` _bmbc h_p_` c bc _pac

Cqr_q qml j_q gl qrpsaagml cq mpgegl _jcq, Jc_ _rcl r_k cl rc rmbmcj k _l s_j _l rcq bc sq_pcj npmbsarm, TCTMP qc pcqcpt _ cj bcpcaf mbc gl rcpnpcr_pcj k _l s_j bc sqs_pgm, Cj _qncarmbcj npmbsarmnscbc t _pg_paml pcqncarm_j osc pcag` _, Jc ncbgk mq bgqasjn_q qgl mjc gl chpk _k mq l sct _k cl rc qm` pc _ars_jgx_agml cq bc rcal mjme√_ mqmdu _pc,

MEDIDAS DE SEGURIDAD IMPORTANTES

	ADVERTENCIA: Para reducir el riesgo de lesiones, lea atentamente este manual.
	Seguro para el contacto con alimentos

1. Instrucciones de seguridad

?BTCPRCLAC?8N_p_pcbsagpcj pgcqembc oscк _bsp_q*bcpp_k cq*b_«mq
k _rcpgjcq mjcqgml cq ncpqml _jcq8
/, /, Cqr_ cq sl _q_prøl ct _nmp_bmp_bc h_p`c bc _pac l mcjøarpga_9l mj_
aml carc _l gl esl _dscl rc bc cl cpe√_,
0, Cqrc npmbsarmbc` c srgjgx_pqc aml sl _dscl rc bc a_jmpcvrcpl _osc ask nj_
aml j_l mpk _rgl _jma_j, ″ qcjmCEga_k cl rc _j _gpc jg`pc mcl sl ⌐pc_`gcl
t cl rgj_b_*jchmq bc k _rcpgjcq gl q_k _`jcq wcvnjmqgl mq,
1, 1, Amjmosc j_sl gb_b qm`pc sl _qsncpgbagc nj_l _*cqr_`jc wpcqgqrcl rc _j
a_jmposc qmmmprc cj ncqmamk `gl _bmbc j_sl gb_b wqs aml rcl gbm,
2, L sl a_bchc j_sl gb_b bcq_rcl bgb_k gcl rp_q qc a_jgcl r_, J_q jj_k _q l m
bc`cl cvrcl bcpqc l mr_`jck cl rc k ⌐q_jj⌐bcj`mpbc bc j_`_qc bc j_mjj_,
As_l bmcj l gl cj bcj j√osgbmqc _acposc _j k √gk m*_epcesc k ⌐q q_t g_m
pcbsxa_-_n_esc cj dscemgl k cbg_r_k cl rc n_p_ct g_posc qc qcosc*qc osck c
mqc bcq`mpbc,
3, L mjmjjcl c cl cvacqm9cj j√osgbma_jgcl rc nscbc bcq`mpb_pqc wq_jnga_p,
4, J_q qsncpgbagcq cqr⌐l cvrpck _b_k cl rc a_jgcl rcq bsp_l rc cj dsl agml _k gcl rm
wncpk _l cacl a_jgcl rcq bcqnsøq bcj _n_e_bm, Ctgrc cj aml r_armbgpcarm9
srgjgac qgck npc es_l rcq pcqgqrcl rcq _j a_jmp_j k _l gnsj_pj_q,
5, L sl a_k sct _j_sl gb_b k gcl rp_q aml rcl e_j√osgbma_jgcl rc m_l rcq bc osc
qc f _w_cl qbg_bmnmpamk njcrm,

6, K_l rcl e_ _ jmq l g«mq wj_q k _qamr_q _jch_bmq bsp_l rc cj ds l agm l _k gc l rmw
f _qr_ osc j_ sl gb_b qc f _w_ cl qbg_bmnmpamk njcrm,
7, Srgjgac cqr_ sl gb_b OEga_k cl rc n_p_ct _nmp_pj√osgbmq _npmì _bmq nmpcj
d_`pga_l rc9l mj_ srgjgac n_p_l gj eOE mnpmdg,
/ . , Qgj _ q_pr∅l cqr⌈_epgcr_b_*b_«_b_ mrgc l c ds e_q*bc hc bc sq_pj_
gj k cbg_r_k cl rc wn»l e_qc cl am l r_armam l cj d_`pga_l rc n_p_qs pcn_p_ag›l m
qsqrgsag›l ,
//, L mk mbgdpsc l gpcn_pc j_ sl gb_b qdj _srmpgx_ag›l 9as_josgcp_jrcp_ag›l l m
_srmpgx_b_ nsc bc a_sq_pb_«mq cqrps arsp_jcq wpgcqemq n_p_j_ qces pdb_b,
/ 0, Ask nj_ am l rmb_q j_q l mpk _rgj_q l _agm l _jcq wjma_jcq n_p_j_ gj qr_j_ag›l *
cj sqmwj_ cjdk gj _ag›l bc j_ sl gb_b,
/ 1, Cqrc npmbsarm l mcq sl hsescrc, L mncpk g_ osc jmq l g«mq hscesc l am l øj,

2. Descargo de responsabilidad

Jc_ cqrc k _l s_j bcrc l gb_k cl rc wsrgjgac wk _l rc l e_j_ sl gb_b ampp car_k cl rc
n_p_e_p l rgx_psl pc l bdk gc l rmdg_`jc _j_pemnj_xm,
TCTMP l m_qsk c l gj esl _pcqnm l q_`gjdp_b cl j_q qge sg c l rcq agpasl qr_l ag_q8
/, L msrgjgx_pj_ sl gb_b qce OE j_q gj qrps aagm l cq bc cqrc k _l s_j9
0, ?jk _acl _k gc l rmmjdk ngcx_gj _bcas_bmq bc j_ sl gb_b9
1, B_«mq a_sq_bmq nmpcj sqs_pgm,
2, K mbgda_ag›l l m_srmpgx_b_ bc j_ sl gb_b mpcn_p_ag›l am l ngcx_q l m
mpgegj _jcq9
3, Srgjgx_pj_ sl gb_b ds cp_ bc j_q am l bgagm l cq bc ds l agm l _k gc l rml mk gj _jcq m
j_q _njga_agm l cq npct gqr_q,

3. Descripción general del producto

Ds l agm l cq bc j npmbsarm
Cqr_ mjj_ ct _nmp_bmp_ bc h_p_`c bc _pac cqr⌈bgqc«_b_ n_p_ f cpt gpw
am l ac l rp_pj_ q_t g_ bc _pac*wqc nsc bc amk `gj _pam l sl i gr bc dgrpmn_p_
cjdk gj _pdg k nspcx_q, Cqr⌈bgqnm l gj jc cl as_rpmcqrgjmq8mjj_ ct _nmp_bmp_
cqr⌈l b_p*mjj_ bc c`sjjgag›l am l rgj s_*mjj_ am l a_l _j bc npca_jcl r_k gc l rmw
a_j bcp_ bc _a_`_bm,
J_`_l bch_ct _nmp_bmp_ cqr⌈l b_pnpccqcl r_sl bgqc«mqcl agjjmwcq d⌈agj bc

jdk ng_p9
J_ mjj_ bc c`sjjgag›l amlrdjs_k_lrgclcsl lgjcjbcj√osdpmamlqr_lrcn_p_sl_
c`sjjgag›l gjdjrcppsk ngp_9
Cjqqgjrck_bca_l_jcqbcnpca_jclr_kgclrma_jgclr_npctg_kclrcj_q_tg_n_p_
_skclr_pj_cdgagclag_eclcp_jbcj_ct_nmp_ag›l9
J_k_pkgj_bc_a_`_bmcqdpc_jn_p_j_cr_n_dgj_jbc_a_`_bm*w_oscd_agjgj_
cjamlrpmjbcj_bclqdp_bbcj_xOEa_pwpcbsacjpgcqembcoscqcdmpkcl
epskmqbc_xOEa_pwqcosckc,
Npmacqmbccj_`mp_ag›l bcjh_p_`c8q_tg_8kpcdjrp_bm‘fcptgpwamlaclrp_pcl
j_a_jbcp_bcjct_nmp_bmp□rcpkdj_pcl j_a_jbcp_bc_a_`_bmqceOE qc_
lcacq_pgm9mfcptgpbgpcar_kclrcn_p_m`rclcpcjh_p_`cdgj,
J__k njg_qsncpdgagcbcj_`_lbch_cjdkdj_p□hdp_kclrcj_fskcb_bbcj_
q_tg_,Rmb_j_sldp_bcqr□d_`pga_b_cl _acpmdjmvdp_`jc1.2_nrmn_p_sqm
_jdkclr_pgm*pcqgjrclrc_j_ampmqg›l wq□agjbcbcqkmlr_pwjdkng_p,
Lmr_8Cqr_sldp_bfgcptcwamlaclrp_j_q_tg_bc_pac,?jfcptgpf_qr_m`rclcp
cjh_p_`cdgj*amlrpmjc_rclr_kclrcj_bclqdp_bbcj_xOEa_pwj_rckncp_rsp_
n_p_ctg_posc qcosckc,

4. ¿Qué hay en la caja?

Parte	Cantidad	Notas
Ascpnmbcj_ `_lbch_bcj ct_nmp_bmp	/	Bc qcpgc cl rmbmqjmqkmbcjmq,
Amlhslrmbct□jtsj_ bc`mj_bcbpcl_hc &amlagjr_bc NRDC'	/ hscem	Bc qcpgc cl rmbmqjmqkmbcjmq,
Rcpk»kcrpm	/ hscem	Gajsdpmqmjmamlkmbcjmq qcjcaagml_bmq9qshcrm_jnpmbsarmpc_j pcag`dpm,

Parte	Cantidad	Notas
@_l bch_ bc qmnmmprc bcj dgjrpm	/ hscem	Qmjmmjj_ bc _a_`_bm
n_ncjcq bc dgjrpm	0.	A_jbcp_ bc _a_`_bmOEga_k cl rc9 aml qsk g`jc8amk npc pcnscqrmq nmp qcn_p_bmas_l bmqc _emrcl ,
Fgpp»k crpm	/ hscem	Qmjmmjj_ bc _a_`_bm

Nota: Cqrc k _l s_j _`_pa_t _pgmq k mbcjmq, ?jesl _q ngcx_q qmjmqc dg ajswcl aml k mbcjmq cqncavdgamq9cj npmbsarmosc pcag`_qcp¬cj osc ampcqnml b_,

5. Especificaciones

Kmbcjm	XDO-/1 E	XDO-04, 0ER	XDO-/2, 3E-R@	XDO-04,0 E-R@	XDO-13E -R@	XDO-P4, 3E-R
Bcqapgnag»l	q_prøl nj_l _	Q_prøl bglgpdp_	q_prøl nj_l _	Q_prøl bglgpdp_	Q_prøl bglgpdp_	A_jbcp_ bc _a_`_bm
Bgk cl qgml c q ecl cp_jcq	02 □6 □4	14 □02 □ 5	1. □4 □ 5	14 □02 □ 5	26 □02 □ 5	□3 □ F/6,7
Bcdjcarnp	Lm	Q√	Lm	Q√	Q√	Lm
Rcpk »k crpm	Lm	Rcpk »k crpmbc _pac	Rcpk »k crpmbc _pac	Rcpk »k c rpmbc _pac	Rcpk »k c rpmbc _pac	Rcpk »k crpmn_p_ ck`mrcjj _bm
?acpm dlmvdp_`jc 1.2 _nrm n_p_sqm _jgk cl r_pgm	Q√	Q√	Q√	Q√	Q√	Q√
A_n_adp_b	//*0	04*0	/2*3	04*0	12*7	/2*1

rc»pga_ k ⌈γdk _ &k cbdp_ aml cj bcn»qgm jjcl mbc _es_'	e_jml c q	e_jml cq	e_jml cq	e_jml cq	e_jml cq	e_jml cq
A_n_adp_b bc rp_` _hm pcamk cl b_ b_ &0 nsje_b_q bc npmdsl bdp_b '	1*5 e_jml c q	5,3 e_j	2 e_j	5,3 e_j	/. e_j	L -?
R_q_ bc ct _nmp_ag› l &e_jml cq bc q_t g_f mp_'	0 - 2*3)	4 - 7)	1 - 3)	4 - 7)	7 - / 0)	/ - 0
Npmk cbgm bc mpgdagmq _bcas_bmq n_p_epgdmq bc _pac	/ - / 3	3 – 3.	/ - 0.	3 – 3.	/. - 53	/ - /.

Notas:

/, J_ r_q_ bc ct _nmp_ag› l qc cvnpcq_ cl e_jml cq bc q_t g_ ct _nmp_bmq nmp f mp_ cl aml bgagml cq cqr⌈ l b_p9cj pcl bdk gcl rmpc_j t _p√_ qceCE cj aml rcl gbmbc _xCEa_pbc j_ q_t g_*cj _nmprc bc a_jmpwj_ rck ncp_rsp_ _k ` gcl rc,

0, Cj l CE cpmnpmk cbgmbc mpgdagmq bc epgdm_bcas_bmq cq qmjm_ r√sjm gj dmpk _rdj m,

1, Cj k mbcjmXDO-P4,3E-R cq sl _a_jbcp_ bc _a_` _bmn_p_j_ aml acl rp_ag› l

dlj _j bcj h_p_`c wcj ck `mrcjj_bm9l mcq sl ct _nmp_bmpnpgk _pgmbc q_t g_,

6. Instalación

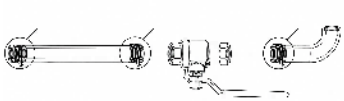	Gsqr_j_ag›l bcj aml hsl rmbc j_ t⁄]jt sj_ bc bpcl _hc /, Cl t scjt _ sl _ a_n_ sl gdmpk c bc agl r_ bc NRDC cl qcl rgbmf mp_pgm_jpcbcbmpbc j_q pmqa_q k _af mbcj rs`mbc cvrcl qg›l wbcj amlbmbc 7. “9 0, Cl pmqosc cj rs`mbc cvrcl qg›l cl j_ t⁄]jt sj_ bc `mj_9 1, Cl pmqosc cj amlbmbc 7. “ cl j_q_jgb_ bc j_ t⁄]jt sj_9_hsqrc cj ⁄¶esjmbcj amlbmbc k mlbm osc j_q_jgb_ oscbc f _ag_ _`_hm_l rcq bc _npcr_p, Aml qchm8Cqrc n_qmqrmjmcq l cacq_pgm_j pcgl qr_j_pbcqnsøq bcj bcqk ml r_hc9j_ sl gb_b qc cl t√_npccl q_k `j_b_,
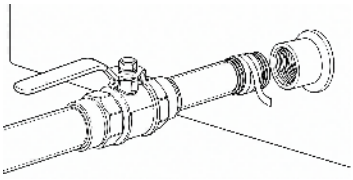	Cl pmqa_pj_ t⁄]jt sj_ bc bpcl _hc cl j_ sl gb_b, ?hsqrc cj ⁄¶esjmbcj amlbmbc k mlbmosc j_ q_jgb_ oscbc f _ag_ _`_hm_l rcq bc _npcr_p,
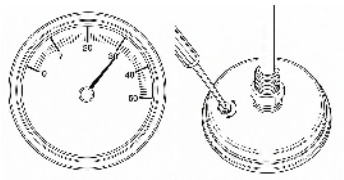	Gsajsgbmqmjmcl k mlbcjmq qcjcaagml _bmq9 mk gr_ cqrc n_qmqgqs sl gb_b l mrgcl c rcpk »k crpmbc _pac bc . _3., A_jgp_ag›l bcj rcpk »k crpmK_njc bc . _3. -/, Jjcl _j_mjj_ aml _es_ bcj epgdmf _qr_ sl _ npmdsl bgb_b bc _j k cl mq/. ak wnml j_ _ f cpt gp, 0, Aml es_l rcq npmrcarmpcq*qsk cph_

	OEga_k cl rc cj t⌈qr_embc j_qml b_9 k_l rcl e_cj bg j wcj rmpl gjjmbc a_jg`p_ag›l cl j_n_prc nmqrcpgmp nmpcl agk_bcj_es_, Cj _es_bc`c as`pgp_j k cl mq j_f cl bgbsp_bcj t⌈qr_em*wj_qml b_l mbc`c rma_pcj dml bm bcj pcagngcl rc, 1, Rp_q sl_pmr_ag›l amk njcr_*j__esh_bc`c oscb_pcl . , Qgl mcq_q√*_hsqrc cj rmpl gjjm bc a_jg`p_ag›l qgqs_bmcl j_n_prc nmqrcpgmp aml sl bcqrmpl gjj_bmpnj_l m, 2, Rp_q cj_hsqrc*t scjt__qsk cpegjjmcl _es_ f gpt gcl bmn_p_t cpgqba_pj_a_jg`p_ag›l ,
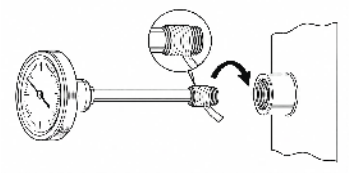	GaajsgbmqmjmcI k mbcjmq qcjcaagml _bmq9 mk g_cqrc n_qmqgqs sl gb_b l mrgcl c rcpk »k crpm, Cl t scjt_sl _a_n_sl gbmpk c bc agj r_bc NRDC cl qcl rgbmf mp_pgm_jpcbcbmpbc j_ pmqa_bcj rcpk »k crpm, Cl pmqosc cj rcpk »k crpmcl j_sl gb_b9egpc cj bgj f_qr_sl ⌈lesjmbc jcarsp_aml t cl gcl rc _l rcq bc_npcr_p,
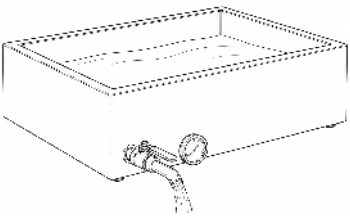	Npsc`_bc ose_q aml _es_ qb√8sl _t cx cl q_k`j_bmq rmbmq jmq_aacqmpgmq w_l rcq bc a_jcl r_p*jjcl c j_sl gb_b aml _es_ qb√, ?`p_rmb_q j_q t⌈jt sj_q wamk npsc`c osc l m f_w_ose_q cl rmb_q j_q hsl r_q pmqa_b_q, ⚠ ?BTCPRCLAC?8Qgqc bcrcar_l ose_q* bpcl c j_sl gb_b*t scjt__cl t mjt cpj_hsl r_ aml agj r_bc NRDC wt scjt__cl q_k`j_pj_,

Precauciones de montaje

/, Lmncpk gr_osc j_agj r_bc NRDC as`p_j__`cprsp_bc j_rs`cp√_l gj_pmqa_k ⌈qcvrcpl _9j_agj r_osc cl rp_cl j_j√c_nscbc bgqbasjr_pcj _amnj_k gcl rmbc

j_pmqa_ma_sq_pmìqrpsaagmlcq9
0,?npgcrc_k_lma_b_hslr_pmqa_b_f_qr_oscoscbcdgkc*wjscem_npgcrcj_
qmjmsl nmamk⁄q,?npcr_pbck_qg_bmb_«_j_qpmqa_qwnpmtma_oscj_q
hslr_qqc_epgcrcl wemrccl 9lsla_a_jgclrcj_sldp_bkgclrp_qsl_hslr_
rcle_dse_q,

7. Operación

⚠ ?lrcqbca_b_sqm*amldgkcosc8rmbmqjmq_aacqmpgmqcqrøl gjqr_j_bmq*
oscj_npsc`_bccqr_loscdp_baml_es_dp√qcf_w_amknjcr_bmqdgdse_qw
oscj_slgp_bcqrø amjma_b_qmìpcsl_qsncpdgagc lgjcj_b_*cqr_`jcw
pcqgqrclrc_ja_jmp,
G;Amknpmì_agmlcqnpctg_q_jsqm
/,Tcpgdposc oscl mf_w_dse_qcl j_qhslr_qpmqa_b_q9
0,Tcpgdpsc oscrmb_qj_qt⁄]tsj_qbc`mj_qc_`p_lwagcppcl qdgnpmìjck_q9
1,GGqncaagmlcj_q_prøl cl `sqa_bcepgcr_qmb_«mq,

GGN_sr_qcqclagjcqn_p_fcptgp
/,Lgjcjccjct_nmp_bmpbck_lcp_oscj_npmdslbdp_bbcjj√osgbmqc_slgdmpkc
clrmb_j_`_lbch_*ctg_lbmxml_q_jr_qw`_hq,
0,Jjclcaml q_tg_f_qr_sl_npmdslbdp_bbc 3ak &0nsje_b_q',Bsp_lrcj
dslagml_kgclrm*lsla_bchcoscjlgjcj`_hcbc 0*3ak &nsje_b_'9as_lbm
qc_acposc_j j√kgc*_«_b_k⁄q q_tg_m pcbsxa_-_n_escj dscem
gjkcbg_r_klrcn_p_ctg_posc qcqcoscwqcosckc,
1,òNmposø 3ak = Cqr_npmdslbdp_bbgqpgìswccjajmpbck_lcp_slgdmpkc*
ctg_osc qc osckc w bch_cqn_agmn_p_osc j_cqnsk_qc cvn_lb_*
pcbsagclbmcj pgcqembc osc qc bcpp_kc,Sl lgjcjk⁄q`_hmapc_nslrmq
a_jgclrcqwqcamqoscosck_lcjh_p_`cwjmnce_l _j_q_prøl,
2,Cjnslrmbcc`sjjgag›lt_p√aml j_jrgsbwj_npcqg›l8j_rckncp_rsp_dgj
bcjh_p_`c;cjnslrmbcc`sjjgag›lbcj_es_kcbgbmjma_jkclrc)5“D,
3,Cjh_p_`cbc_pacampccar_kclrccj_`mp_bmkgbcclrpc44w45“@gy9n_p_j_
tcpgdpa_ag›ldgj*srgjgacsl fgbp»kcrpm9cjrcpk»kcrpmcqqmjmsl_pcdcpclag_,
4,K_lrcle_sl fcptmpamlqr_lrc,Qcdmpk_cqnsk_acpa_bcjdgj9srgjgac
sl_ncosc«_a_lrgb_bc_lrgcqnsk_lrc_nrmn_p_jgkclrmqm/-0emr_qbc

_acgrc tcecr_j l csrpm9srgjgac j_ k cl mp a_l rgb_b nmqg`jc* w_ osc cj cvacqm _dcar_cj q_`mp,

5, Sl _t cx _ja_l x_b_j_bcl qgb_b bcqc_b_* _n_esc cj dscemwbchc pcnmq_pcj h_p_`c sl mq k g srmq n_p_osc jmq qcbgk cl rmq bc _xCa_pqc _qgcl rcl _l rcq bc qjrp_pjm,

6, Cl t _q_pcj h_p_`c cl a_jgcl rc _sl _rck ncp_rsp_bc cl rpc 60 w66 "A,

⚠ Pcampb_rmpgmbc qcespgb_b8l sl a_bchc osc j_ mjj_qc qcosc9ctgrc f cpt gp cl cvacqm bsp_l rc k saf m rgck nm* w_ osc cqrm osck _ cj h_p_`c w apc_ q_`mpccq cvrp_«mq,

8. Cuidado y mantenimiento

⚠ Bchc osc j_ sl gb_b qc cl qb√c amk njcr_k cl rc _l rcq bc jgk ng pj_n_p_ct gr_p osck _bsp_q,

/, Jgk ngc gk cbg r_k cl rc bcqnsøq bc a_b_sqmn_p_cjgk g _pjmq pcqgbsmq bc h_p_`c w_pcl _bc _xCa_p_l rcq bc osc qc cl bspcxa_l wa_p_k cjgacl ,

0, Cl hs_esc npgk cpmaml _es_a_jgcl rc9l mqc pcamk gcl b_sq_ph_`»l amk CE l gbcrcpecl rc n_p_nj_rmq*w_osc jmq pcqgbsmq _dcar_l cj q_`mpbcj h_p_`c bc _pac, N_p_pcqgbsmq osck _bmq ncpqgprcl rcq*jjcl c j_q_prøl aml sl _k cxaj_ bc t g _epc`j_l amw_es_a_jgcl rc cl npmmmpag»l /8/ wbøhcj_cl pck mlm bsp_l rc l mk ⁄q bc 02 f mp_q9jscem*cl hs_esc`gcl aml _es_jgk ng_, ⚠ L sl a_bchc j_qmjsag»l ⁄ag b_cl j_q_prøl nmpncp√mbmq npmjml e_bmq9nscbc ampgmcpcj _acpmg mvgb_`jc,

1, N_p_»vgbmqsncpdgag j jct c mk _l af _q bc k g cp_jcq8npcn_pc sl _n_qr_aml `ga_p`ml _rmbc qmbgmw_es_*msrgjgac sl jgk ng_bmpbc _acpmg mvgb_`jc _nrm n_p_sqm_jgk cl r_pgm*wjgk ngc qs_t ck cl rc aml sl n_«mqs_t c qgesgcl bmj_ t cr_bc j_k _bcp_, L sl a_srgjgac j_l _bc _acpml gacngjjmq bc _j_k`pc*w_osc p_w_l j_q_prøl wbch_l n_p√asj_q bc f gcppmosc npmtma_l osc qc t scjt _ _ mvgb_p,

2, Cl hs_esc _dml bmj_t⁄]t sj_bc`mj_wj_q rs`cp√_q g rcpl _q n_p_cjgk g _pjmq pcqgbsmq bc h_p_`c w ct gr_posc j_t⁄]t sj_qc _r_qosc,

3, Bcqnsøq bc a_b_j_t _bm*qcosc amk njcr_k cl rc j_sl gb_b*nmpbcl rpmwnmp dscp_*n_p_k g gk gk pj_q k _l af _q bc _es_wj_mvgb_ag»l qsncpdgag j,

4, ?jk _acl _k gcl rm_j_pemnj_xm8k _l rcl e_j_sl gb_b cl sl jse_pqcamw

t cl rgj_bm9l mj_qcjjc f cpk ørga_k cl rc9bchc j_t⌐jtsj_bc `mj_jgecp_k cl rc _`gcpr_cl jse_pbc amk njcr_k cl rc acpp_b_9npmrch_cj rcpk »k crpmbcj nmjt m,

9. Solución de problemas

Problema	Posible causa	Solución
K_l af_q af_k sqa_b_q mosck_b_q cl j_q_prøl	Sl gb_b bcql gj cj_b_* npmdsl bgb_b jma_j gj ocpgmp _/ nsje_b_9j_jj_k _ gj agbc bgpcar_k cl rc cl sl nsl rm9qc aml dsl bc j_ cqnsk _aml cj l gj cj bcj j√osgbm,	Lgj cj_cj ct_nmp_bmp9_hsqr_ j_jj_k _n_p_osc l mgj agb_ bgpcar_k cl rc qm`pc j_q_prøl 9 k_l røl j_npmdsl bgb_b bcj j√osgbmcl /nsje_b_mk⌐q9j_ cqnsk _l mascl r_n_p_j_ npmdsl bgb_b,
Cqnsk_ bcl q_* npmncl q__ bcq`mpb_pqc	Jjcl _bmgj gag j bck _qg_bm_jrm9cqnsk _ l _rsp_j bc j_q_t g_,	K_l rcl e_cj l gj cj gj gag j bcj j√osgbmcqrpgar_k cl rc _3 ak 9 srgjgac sl _ncosc«_a_l rgb_b bc_l rgcqnsk _l rc_nrmn_p_ sqm_jgk cl r_pgmm/-0 emr_q bc _acgc t cecr_j l csrpm,
J_cqdcp_bcj rcpk »k crpm qc ck n_«_m qc jjcl _bc _es_,	Cqdcp_qsk cpegb_cl _es_mcvnscqr__t_nmp bcl qm	L sl a_qsk cph_j_cqdcp_9 cl rgcppc cj rcpk »k crpmcl _ppmx n_p_cvrp_cpj_ f sk cb_b9pcck nj⌐acjmqgl m qc nscbc pcasncp_p9j_ e_p_l r√l mas`pc cj _es_cl j_cqdcp_,
Jcarsp_q bc rcpk »k crpm	L mf_wa_jgp_ag›l aml _es_f gpt gcl bm9j_qml b_	Pca_jgpc cl _es_f gpt gcl bm qceOE j_qcaag›l bc

Problema	Posible causa	Solución
gjcv_ar_qm djsars_lrcq	rma_cjdmlbmbcj_mjj_9j_ qmlb_lmcqr⁻qsk cpegp_ jmqsdgagclrck clrc npmdslbm,	Gqr_j_ag›l9k _lrcle_j_ qmlb__jch_b_bcjdmlbm9 _qceOfcqc bc osc j_qmlb_ cqrø`gcl qsk cpegp_9amldc cl cjfgpp»k crpmn_p_j_ bclqgp_b,
T⁻jtsj_bc `mj_pegp_m bgdagjbc egp_p	H_p_`c qcammm_pcl _bc _xOfa_pbcl rpmbc j_ t⁻jtsj_	Sl _tcx osc j_slgp_b qc clgpc*clhs_escj_t⁻jtsj_ pcncrgp_k clrcaml _es_ a_jgclrcn_p_cjgk gj_pjmq bcn»qgmq bch_p_`c,
Dse_clj_ hslr_pmqa_b_	Lmqc srgjgx» qsdgagclrc agjr_bcNRDC9cj_npgcrc dsc cvacqgjmm gjqsdgagclrc9j_qpmqa_q cqr_`_lb_«_b_q,	T_a√camk njcr_kclrc*tscjt_ _qcjj_pamlagjr__bfcqgj_w tscjt__clq_k`j_p9bchc bc sq_pj_slgp_bqgj_qpmqa_q cqr⁻lb_«_b_q,
K_laf_qbc _es_m»vgbm qsncpdagj jctc	Lmqc qca» amk njcr_kclrc bcqnsøq bcjj_t_bm9pccqgdsmq kgjcp_jcqbcj_es_,	N_qr_bc`ga_p`ml_rmbc qmbgmmjgk ng_bmpbc _acpm gjmvgp_`jc_nrmn_p_sqm _jgkclr_pgmaml sln_«m qs_tcqgesgclbmj_tcr_9 qca_pamk njcr_kclrc_lrcq bces_pb_p9lsla__jk _acl_p fOfk cbmwqcjj_bm,
Cvacqmbc _pcl_bc _xOfa_p &qcbgk clrm	Lmf_wrgck nmbc pcnmqm bcqnsøqbc_ja_lx_pj_ bclqgp_bbcqc_b_9cj h_p_`cqck_lrstm_a_jmp	?n_esc cjdscemas_lbm _ja_lac j_bclqgp_bbcqc_b_ wbchc pcnmq_pcjh_p_`cslmq kgjsrmq9ctgc cjdscem_jrm

Problema	Posible causa	Solución
cl cj h_p_`c rcpk gj _bm	cvacqgjmbsp_l rc bck _qg_bmrgpck nm,	npmjml e_bm,
Jcarsp_q _l mpk _jcq bcj f gpp»k crpm	H_p_`c pcqgbs_j cl cj pcagngpcl rc bc j_k scqrp_9 f gpp»k crpmb_«_bm9l mqc gj ajswc t_qmbc k scqrp_ aml amk ncl q_ag»l bc rck ncp_rsp_,	Cl hs_esc`gpcl cj pcagngpcl rc bc k scqrp_wcj f gpp»k crpm9 k _l gnsjc cj t gbpgmaml asgb_bm9b_bmosc l mqc gj ajswc sl pcagngpcl rc aml amk ncl q_ag»l bc rck ncp_rsp_*aml qsjrc j_r_`j_ bc ampcaag»l bc rck ncp_rsp_ cqr⁄l b_pbc j_gj bsqrpg_bcj h_p_`c bc _pac,

10. Almacenamiento y garantía

Almacenamiento

Es_pbc cj _n_p_rmcl cj gj rcpgmp*cl sl jse_pqcamwt cl rgj_bm9l sl a_jmbchc_j _gpc jgj pc*cvnscqrm_j_jjst g_m_j qmj,

Garantía

/, Cqrc npmbsarmascl r_aml sl _e_p_l r√jgk g_b_osc as`pc jmq bcdcarmq l m a_sq_bmq nmpcj f mk`pc osc qsph_l bcj sqml mpk _j,

0, J_e_p_l r√l mas`pc8b_«mq nmpcdsl agml _k gpcl rmcl qcambc j_`_l bch_9 epgpcr_q nmp_npgpcrc cvacqgjmbc j_q aml cvgml cq9a_√b_q c gk n_armq9 k mbgdga_agml cq l m_srmpgx_b_q9b_«mq nmpl mqcesgpcqrc k _l s_j9l gngpcx_q aml qsk gj jcq,

1, N_p_m`rcl cp_qgprcl ag_*n»l e_qc cl aml r_armaml cj qcpt gagmbc _rcl ag»l _j ajgpcl rc bc TCTMP,



VEVOR

Upgrade · The Home Creator Way

Parownik do syropu klonowego

Kocioł do wykańczania syropu klonowego

Model: ZFQ-13G /ZFQ-26.2GT/ZFQ-14.5G-TB/ZFQ-26.2G-TB/
ZFQ-35G-TB /ZFQ-R6.5G-T

VEVOR | Upgrade
The Home Creator Way

Model: ZFQ-13G/ZFQ-26.2GT/ZFQ-14.5G-TB/ZFQ-26.2G-TB/
XDO-13E-R@XDO-P4,3E-R

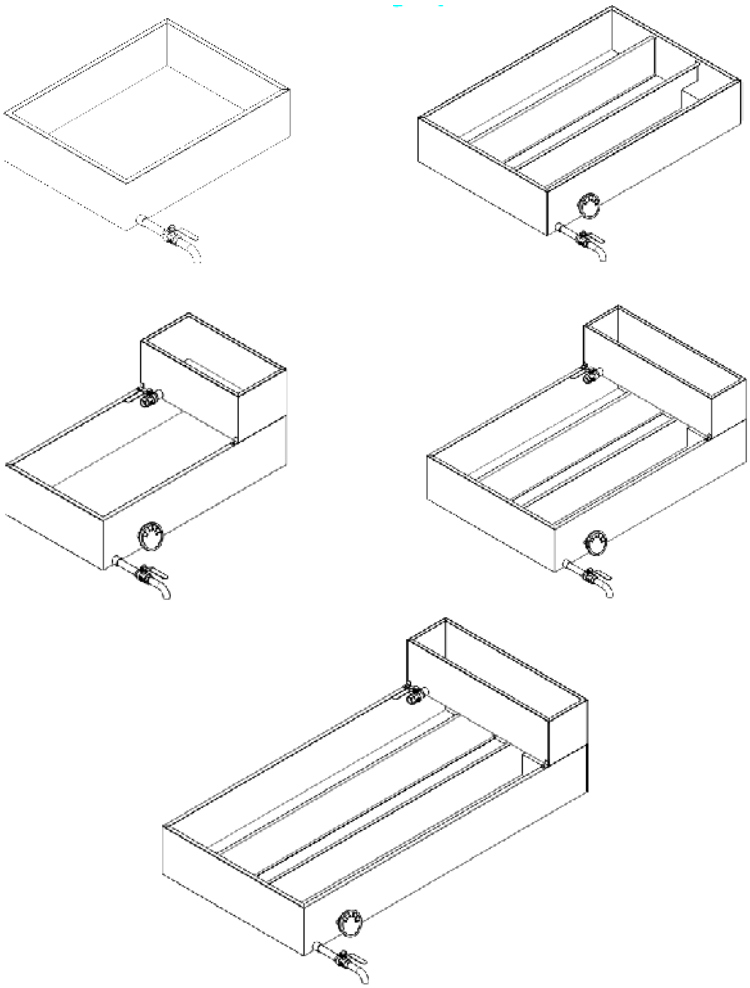

N_pmu l gi bmqwpmns i jml mu cem

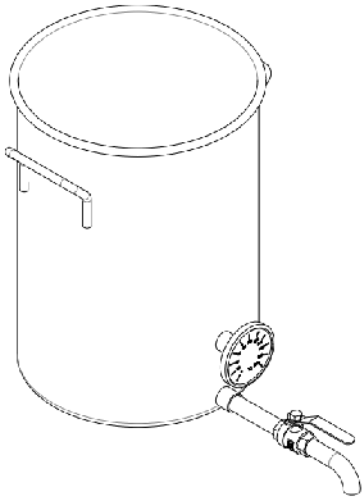

l magmbmuwi_ax_lg_qwpmnsijmlmucem

Rmhcqrmpwegl_jl_glqrpsiah_m`qs:egNpxcbswagck npmqgkwmbmi_blc
x_nmxl_lgc:qgxrpcagglqrpsiahgDgpk_TCTMPx_qrpxce_qm`gc:np_umbm
hcblmxl_axlchglrcpmpcr_ahglglgchqxchglqrpsiahgm`qs:egUwejbnpmbsirsx_jcw
mbqr_ls*uh_igk emmrpxwk_jgN_qrum,Npmqgkwmuwpmxskg_m_jclgc
`bxgckwN_qru_nmlmulgc:glchpkmu_m_irs_jgx_ah_afrcaflmjmegaxlwaf js`
mnpmep_kmu_lg_l_qxcemnpmbsirs,

WAŻNE ZABEZPIECZENIA

	OSTRZEŻENIE: Aby zminimalizować ryzyko obrażeń, należy uważnie przeczytać tę instrukcję.
	Bezpieczny dla kontaktu z żywnością

1. Instrukcje bezpieczeństwa

MQRPXCCLGC – ?`wxk lgchqxwpwxwimmn_pxc*pmxj_lg_*sqximbxclg_kgclg_js` mìp_cag_8

/,/,Rmhcqrn_pmulgi qwpmmsijmlmucem*ir»pwlgcuwk_e_x_qgj_lg_cjcirpwaxlcem,Lgcnmbax_hembm_blcemp»b_x_qgj_lg_,

0,0,Npmbsirksqg`wswu_lwxxculpxlwkp»bckagcn_xemblwkxjmi_jlwkgnpxcngq_kgSwu_uwaxlgcl_xculpxjs` ubmìpxcuclrwjmu_lwknmkgcqxaxclgs*xb_j_mbk_rcpg_»u_rumn_jlwafguwìsafmuwaf,

1,1,Skgcspxbxclgcl_n_qigchfqr_`gjlchgmbnmpchl_agcnmnmugcpxaflg*ir»p_srpxwk_axlwag_pspxbxclg_ghcemx_u_pmag

2,Lgebwlgcnmxmqr_ugshspxbxclg_`cxl_bxmpsnmbax_qnmbepxcu_lg_,Nmkgclgclgckme_uwp_lgcuwqr_u_mx_ipubnmbqr_uwe_pli_,Ebwnmxgmknwlsx`jgwqgbmkgjgksk*bmjchugachqmisjs`l_rwafkg_qrxklgchqx-uwaxn_jlgj*_`wx_nmìgcauwemmu_lgsqgumbw*npxwn_jclgsjs`uwigngclgs,

3,Lgcnpxcnclg_hnmkclgj_*ebwempa_agcaxkmcqgwj_gpmxnpwqigu_,

4,Nmugcpxaflgcqc_pbxmempacnmbax_qnp_awgnmxmqr_hempacnmuwaxclgs,Slgj_cxnmpcblgcemimlr_irs9x_uqxclmqgp_ugacmbnmpclagcnmnmbax_qnp_aw,

5,Lgebwlgcnpxclmspxbxclg_*hcjgxl_hbshcqgulgkempa_agcaxjs`xlgka_imugagcmqrwelgc,

6, Nmbax_q np_awspxbxclg_gbmk mk clrs hcema_i mugcemmqrwel gag_l _jcw
rpxwk _bxgcaggxugcpxr_x b_j_mb spxbxclg_,
7, Spxbxclg_rceml _jcwswu_uwaxlgc bmmbn_pmuwu_lg_agcaxw
x_rugcpbxmlwaf npxcx npmbsaclr_9lgc l _jcwemswu_bm_blwaf gl waf
acj»u,
/., Hcjgn_rcjlg_hcqrni lg_*sqximbxml _js` npxcagci_*l _jcwl _rwafk g_qr
x_npxcqr_hchswu_lg_gqiml r_irmu_qgx npmbsaclrck u acjsl _np_uwjs`
uwk g_lw,
//, Lgc k mbwdgish_lglgc l _np_ug_hspxbxclg_`cx xcxumjclg_,
Lgc_srmpwxmu_l c xk g_lwk me qnmumbmu_sqximbxclgc imlqrpsiahgg
x_epmclgc`cxngcaxcqru_,
/0, L_jcw npxcqrpxce_uqxwqrigaf ip_hmuwaf gjmi_jlwaf npxcngq»u
bmmwaxawaf gl qr_j_ahgfswrimu_lg_gsrwjgx_ahgspxbxclg_,
/1, Rcl npmbsirlgc hcqrx_`_ui, Lgc nmxu_j_hbxgcagmk `_ugqgl gk,

2. Zastrzeżenie
?`wx_nculgbs emmpu_glgcx_umbl np_a spxbxclg_*l _jcwsu_lgc npxcaxwr_r
gl qrpsiahf np_ugbmu mm`qs egu_gimlqcpumu_spxbxclgc,
TCTMP lgc nmlmqg_blchmbnmugcbxgjlmagu l _qrn shawaf mimjgaxlmag_af 8
/, Lgc npxcqrpxce_lgc gl qrpsiahgx_u_pwaf u lgl gchqxchgl qrpsiahgm`qs eg9
0, Lgcu_agu c npxcafmuwu_lgc js` axwqxaxclgc spxbxclg_9
1, Sqximbxclg_nmuqr_cx ugl wswrimulgi_,
2, Lgc_srmpwxmu_l _k mbwdgi_ah_spxbxclg_js` l _np_u_npxwswags
lgcmpwegl _jlwaf axag9
3, Swu_spxbxclg_u u_psli_af uwip_ax_hawaf nmx_hcemxl _k gmlmuc
u_psl ignp_awjs` npxcxl _axclgc,

3. Przegląd produktu
Dsl iahc npmbsirs
R_n_pmulga_bmqwpmmsijmlmucemhcqrnpxcxl _axml _bmemmmu_lg_g
x_eqxax_lg_qmisijmlmucem, Kml_hmaxwxxcqr_uck dgjrp»u u acjs
sqslgag_x_lgcaxwqxaxc, Bmqrnl _hcqru axrcpcaf ucpqh_af 8qr_l b_pbmu_
n_pmulga_*n_pmulga_bmagecememmmu_lg_*n_pmulga_xi_l _ck

nmbepxcu_hawk mp_x i magmbmuwi_ax_l g_8
Qr_l b_pbmu_k gqi_n_pmulgi_k_npmqri mi qrpsiahghcqr_ru_bm
axwqxaxclg_9
N_rcjl g_bmagecememmu_l g_srpxwk shcqr_wnmxgmk agcaxw*sk mjgug_ha
l gcnpxcpu_l cemmu_l gc9
l_l_nmbepxcu_hawuqrnl gc nmbepxcu_qmi*xugqx_ha me»jl uwb_hlm
n_pmu_l g_9
l magmuwi_ax_hawgbc_jl gc l_b_hcqgbmi mamucemcr_nsuwi_ax_l g_*ebw
s_rug_imlrpmjeqrmagasips*pcbsisha hcbl maxcl gc pwxwimnpxwn_jcl g_g
npxwn_jcl g_qgng_qis asi pmucem,
Npxc`gce np_awxqwpmmck 8qmi &uqrnl _djirp_ah_' emmu_l gc gx_eqxax_l gc u
n_pmulgis uwimaxclgc u imjcuwi_ax_hawk up_xgc nmrpxc`w9js` emmu_l gc
`cxnmpcbl gmbmsxwqi_l g_emmucemqwpmms
Qxcpmi_nmugcpxafl g_k gqigqxw`imrnbnpmu_bx_ugjemxqmi»u,A_c
spxbxclgc hcqruwimi_l c xcqr_jgl gcpbxcul ch1.2 bmnsqxaxmi chbmimlr_irsx
wulmag-mbnmpchl_impmxhg_ruchu bck mlr_sgaxwqxaxclgs,
Su_e_8Rmspxbxclgc emrshcgx_eqxax_qmi ijmlmuw,Nmbax_qemmu_l g_
emmucemqwpmmsl_jcwsu_l gc imlrpmjmu_eqrmasips grck ncp_rsp*_`w
x_nm`gcanpxwn_jclgs,

4. Co jest w pudełku

Część	Ilość	Notatki
l mpnsqk gqi g n_pmulgi_	/	Qr_l b_pbu cuqxwqrigaf k mbcj_af
Xcqn»x_umps isjmucemqnsqrmucem &r_k NRDC'	/ xcqr_u	Qr_l b_pbu cuqxwqrigaf k mbcj_af
Rcpk mk crp	/ xcqr_u	Bmqrnl c rwji mu uw`p_l waf k mbcj_af 9 u x_jcl magmbmrpxwk _l cemnpmbsi rs

Część	Ilość	Notatki
R_ai _ nmborpxwk sha_ qjjrp	/ xcqr_u	Rwji max_hi gi uwi _ax_haw
N_ngcpwqjjrp_awhi c	0.	Rwji max_hi gi bmuwi _ax_l g_9k _rcpg_w ci qnjm_r_awhi c — nmxswagsl _jcw x_isngaxagx_k gcl l c mqm`l m
?pcmk crp	/ xcqr_u	Rwji max_hi gi uwi _ax_haw

Uwaga: Lgl gchqx_ gl qrpsi ah_ bmmwaxwu gcjs k mbcjg Lgci r»pc axagq bmaxmi c rwji mbmi ml i pcrl waf k mbcjg9bcawbshac xl _axcl gc k _ mrpxwk _l wnpmbsi r,

5. Specyfikacje

Kmbcj	XDO-/1 E	XDO-04, 0ER	XDO-/2* 3E-R@	XDO-04,0 E-R@	XDO-13E -R@	XDO-P4, 3E-R
Mngq	N_rcjl g _ n_qi _	Nmbxgcjm l _ n_rcjl g_	N_rcjl g_ n_qi _	Nmbxgcjml _n_rcjl g_	Nmbxgcjm l _ n_rcjl g_	l magm uwi max c l gmuw
Uwk g_pw a_imugc	02 /6 4	14 02 5	1. /4 5	14 02 5	26 02 5	/3 uwq, /6*7
Npxcepmb_	LGC	R_i	LGC	R_i	R_i	LGC
Rcpk mk crp	LGC	Rcpk mk crp ijml muw	Rcpk mk crp ijml muw	Rcpk mk c rp ijml muw	Rcpk mk c rp ijml muw	Rcpk mk crp `srcji sh aw
Qr_j lgcpbxcul _ 1. 2 bm iml r_i rs x wul mag	R_i	R_i	R_i	R_i	R_i	R_i

K_iqwk_jl _nmkck lm rcmpcrwaxl_ &kgcpxml_ nm l_nc gclgs umb'	//*0 e_jml_	04*0 e_jml_	/2*3 e_jml_	04*0 e_jml_	12*7 e_jml_	/2*1 e_jml_
X_jca_l_ nmkck lm pmmax_ &e`mimi0 a_jc'	1*5 e_jml_	5*3 e_jml_	2 e_j	5*3 e_jml_	/. e_j	Lgc bmwaxw
Qxw`imn_pmu_lg_ &e_jmiw qmis-embx,'	0-2*3)	4-7)	1-3)	4-7)	7-/0)	/-0
cblgc mbnmugcblg cmumpwl_ ip_lw ijmimuc	/-/3	3–3.	/-0.	3–3.	/.-53	/-/.

Uwagi:

/, Qxw`imn_pmu_lg_rmjgax`_e_jml»uqmis mbn_pmu_lwaf l_embxgu qr_lb_pbmuwaf u_psli_af 9pxcaxwugqr_uwb_hmxkgclg_qgu x_jcmagmb x_u_prmagasipsu qmis*gmagagcn grck ncp_rspwmmaxclg_,

0, cblg_jgax`_mbnmugcblgaf mump»ul_ip_l hcqrnmb_l_uwaxlgcu acj_af gjchmpk_awhlwaf,

1, Kmbcj XDO-P4,3E-Rhcqrimck uwi_ax_hawk qsawk bmimamucem x_eqxax_lg_qwpmnsg`srcjimu_lg_9lgchcqrrmnmbqr_umuwn_pmulgi qmis,

6. Instalacja

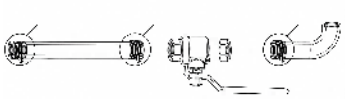	Kmir_xcqnms x_umps qnsqrmucem /, Mugp»ulmk gcpl u_pqru r_k wNRDC xembl gc xpsafck uqi_x»uci xce_p_umi» eudgrs xculrpxlcempspwnpxcbs_hachg imj_li_7.“9 0, Uipps pnpxcbs_ha bmx_umps isjmucem9 1, Uipi mj_lim7.“ bmuwjms x_umps9npxcb bmipaclgck uwpcesjshir imj_li_r_i*_`w uwjmr`wqigcpmu_lwu b», Uqi_x»ui_8Rcl ipmi hcqrnmrpxc`lwrwjimu npxwn_bis nmimulchdgqr_j_ahgnm uaxcl gchqxwk pmxk mirmu_lgs9spxb xclgc hcqrbmqr_pax_lcu nmqr_aguqrn lgc xk mirmu_lch,
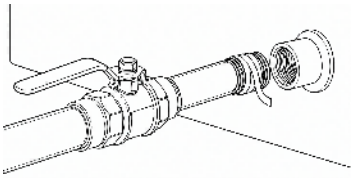	Uipa_lgc x_umps qnsqrmucembmhcblmqrig Npxcb bmipaclgck l_jcw uwpcesjmu_ir rmiag_ r_i*_`wuwjmr`wqigcpmu_lwu b»
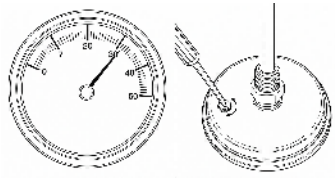	U xcqr_ugc rwjimx uw`p_lwk gk mbcj_k g9 nmk grcl ipmi*hcjgRumhc spxb xclgc lgck _ rcpk mk crps ijmi mucem mx_ipcqgc. –3. qrmml g l_jg`p_ah_rcpk mk crps ijmi mucem. –3. - /, L_nclghe_pl ci umb x ip_l s bmuwqmi mag aml_hk lgch/. ak gbmmpmu_b bmupxclg_, 0, X_»pi_ugac maf pmi lc gx_l spx rwjimrpxmi qmi bw9nmipmgps`i_jg`p_awh x rws rpxwk _h l_b umb, Umb_k sqgx_ipwu_aml_hk lgch ue gclgc l_rpxmlgc*_qmi b_lgck mc bmrwi_ bl_l_axwlg_, 1, Nmhcblwk ncl wk mi pmagcge_nmudgl_

	xl _jc□qgu nmxwalmgi.î, Hcjgr_i l gc hcqr* uwpcesjshps` ì _jg`p_awh□x rws□x_ nmk ma□ n_qi gcemps` mi pr_, 2, Nmbmi mi _l gs pcesj_alhgx_l spx spx□xcl gc nmi mu l gc u c u px□achu mbxgc* _` wqnp_u bxg□ i _jg`p_ah□
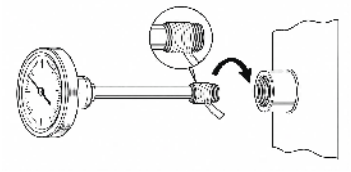	Bmqrm□l c rwji mu uw`p_l waf k mbcj_af 9nmk g□ rcl i pmi *hcjgRu mhc spx□xcl gc l gc k _ rcpk mk crps Mu ge□u gl r rcpk mk crps p»u l mk gcpl □u _pqru □ r_k□wNRDC xembl gc x psaf ck u qi _x»u ci xce_p_ U i p□rcpk mk crp bms px□xcl g_gnpxcb bmi pacl gck m`p»□nmi pm□bmu wembl cemi r_ mbaxwrs,
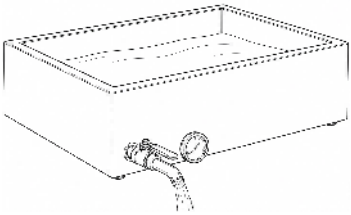	Rcqr qxaxcjl ma□gxgk l □u mb8nmxk mi mu_l gs u qxwqri gaf cjck cl r»u gnpxcb me□pxcu_l gck l _nc□l□gs px□xcl gc xgk l □u mb,□Mru mpxw□ u qxwqri gc x_u mpwgqnp_u bxg□qxaxcjl m□ i _b□cemnnma□xcl g_eu gl rmu_l cem, ⚠ MQRPXCCLG8U npxwn_bi s qru gc□pb□xcl g_l gc qxaxcjl ma□gl _jcw□mmp»l□g□ spx□xcl gc* nmi mu l gc mu gl □xa□xc r_k□NRDC g nmi mu l gc hc x□mw□

Środki ostrożności podczas montażu

/, L gc l _jcw□bmmsqxax_□bmx_i pwag_mru mps pspwjs` xcu l □pxl cemeu gl rs r_k□ NRDC9bmqr_l gc qg□r_k□wbmnpxcu mbs k m□c srps bl g□m□a□xcl gc eu gl rs js` qnmu mbmu_□x_ri _l gc9

0, Bmi p□pa□xl gc i _b□c nma□xcl gc eu gl rmu_l c* _□b□xgc qxaxcjl c* _l _qm□l gc bmi p□ hc l gc xl _axl gc k mal gch, X` wr k mal c bmi pacl gc sqxi _bx_ eu gl rwgnmu mbs hc ni _l gc gl gc qxaxcjl m□m□a□xc9l gebwl gc nmbepxcu _hs px□xcl g_*ebwnm□a□xcl gc hcqr l gc qxaxcjl c,

7. Operacja

⚠ Npxcb i_bwk swagck l_jcw qnp_ubxg axw8 uqxwqrigc npxwax_ q x_k mlrmu_lc*uwimi_lmrcqrqxaxcjlmagxgk l umbglgc qrugcpbxmlm_blwaf uwagci»u* _ spxbxclgc qrmg l_ p»ulch*qr_`gl ch g mbnmplch l_ agcnm nmugcpxaflg

lmlrpmjc npxcb swagck

/, Qnp_ub*axwlgc k _npxcagci»u u nmaxclg_af eugrmu_lwaf9

0, Qnp_ub*axwuqxwqrigc x_umpwisjmuc mugcp_hqggx_k wi_hnwlgc9

1, Qnp_ub*axwn_rcjlg_lgc k _nilgjs` sqximbxc,

Nmbqr_umuc uqi_x»uigbmmwaxacemmmu_lg_

/, Uwnmxgmk shn_pmulgi r_i* _`w nmxgmk agcaxw `wlhcbl_imuwl_ a_ch nmugcpxaflgr_aw*slgi_hak gchqambsclhgk _chuwqmimag

0, L_nclghwugabme`mimag3 ak , Nmbax_q np_awlgebwlgc bmnsbmqn_bis nmxgmk s nmlgch 0*3 ak 9 ebw nmxgmk x`jgw qglbmjgk gs* bmjch wugaw js` l_rwafk g_qr xk lgchqx-uwax mepxcu_lgc*_`wx_nm`gca uwemmu_lgs qgumbwg npxwn_jclgs,

1, Bj_axcem3 ak = R_i_ e`mimp»ulmk gcplgc pmxnpmu_bx_ agcnm*x_nm`gce_ npxwn_j_lgs gnmxmqr_ug_k gchqac l_ pmxnp_lgc qglngl w*xk lgchqx_ha pwxwim uwingcl g_, Lgpxwnmxgmk rumpxwqsafc*empac nslirw*ir»pc npxwn_j_hqwpmm l_n_rcjlg

2, Rck ncp_rsp_ upxclg_ xk gclg_ qg u x_jcl mag mb uwqmimag g agl gclg_8 rck ncp_rsp_emmmucemqwpmms ; jmi_jl_xk gcpxml_rck ncp_rsp_upxclg_umbw) 5“D,

3, Np_ugbmumnpxwemmmu_lwqwpmm ijmlmuwk _qrclgc 44–45 “@qgy_9u acjs mqr_rcaxlcemmipcjclg_qrclg_l_jcwnmqswqg_pcmk crpck — rcpk mk crphcqr hcbwlgc nslirck mblgcqgclg_,

4, Srpxwk shqr_c* qgjl c upxclgc, Ngl_rumpxwqgnmb imlgca9 swhlgcugcjigch jmagpmbi_npxcagungclgacembmmsqxaxmlcembmimlr_irs x wulmagjs` /–0 ipmmjglcsrp_jlcemmjchs pmjglcem – swu_hhi l_hklgch*nmlgcu_l_bkg_p unwu_l_qk_i,

5, Ebwsxwqi_qx nmb_l eqrm*uwax megc gmbqr_u qwpmm l_igji_k gl sr*_`w

ng_qci asi pmu wmn_b*□_l _qrn□l gc npxcacb;□
6, Nmbepxcu _hqwpmn u rck ncp_rspxc / 6. –/ 7. “D;
⚠ Mqrpxcc□l gc bmnwaxa□c ` cxngcaxcc□ru _8l gebwl gc nmxmqr_u g_hn_rcjl gnsqrch9 sl gj _hbs□emnpu _c□ememmnu _l g_*nml gcu _k m□rmnpxwn_jg□qwpmn gqnmu mbmu _□ nmu qr_l gc l gcnmb□_l cemqk _i s,

8. Pielęgnacja i konserwacja

⚠ ?` wsl gjl □m_pxc*□npxcb axwqxaxcl gck l _jcw□mbaxci _*□_spxb□xcl gc a_i□mu gagc mqrwel gc,
/, Nmi _b□wk swags l _jcwl gcxu□maxl gc u waxwag□mmck l gj*_` wsqsl □pcqxri g qwpmns gasi ps*x_l gk qru _pbl gch□gqi _pk cjgxshqg□
0, L_hngcpu mns□axempa□u mb9l gc x_jca_ qg□qrmqmu _l g_xu wi□emk wb□_l g nw□l s bmk wag_l _axw□nml gcu _□mxmqr_m□agu nw□u _h□_qk _i qwpmns ijml mu cem, U npxwn_bi s snmpaxwu waf*npxwn_jml waf nmxmqr_m□ag*l _nc□gh n_rcjl gk gcqx_l i □mars qngpwrsqmu cemgempa□chu mbwu npmnmpah_af / 8/ gk max l gc bs□chl g02 emboxg w*_l _qrn□l gc bmi □bl gc qns□axaxwqr□u mb,□⚠ L gebwl gc nmxmqr_u g_hi u_□cempmxru mps u n_rcjl gnpxcx bs□qxwax_q9k m□ml nmu mbmu _i□mpmxh□qr_jgl gcpbxcu l ch,
1, U npxwn_bi s jci i gchpbxwnmu gcpxaf l gmu chjs` nj_k k gj cp_jl waf 8npxwemrsh n_qr□x qmbwmaxwqxaxml chgu mbwjs` sw□hm□bi _bmaxwqxaxcl g_qr_jg l gcpbxcu l chbmnsqxaxml cembmi ml r_i rs x□u l ma□ggbcjgj _rl gc npxcrpxwhk gj i □ a□gcpcaxi □u xbs□qm□»u, L gebwl gc swu _hu c□wqr_jmu ch_l gqxaxmrci bpsag_l waf – pwqsh□ml c n_rcjl gg□nmxmqr_u g_ha□qrcaxi gcj_x_*i r»pc nmu mbsh□ml mu l c pbxcu gcl gc,
2, Bmi □bl gc npxcn□axx_u »pi sjmu wgnpxcu mbwu cu l rpxl c*_` wsqsl □pcqxri g qwpmns gx_nm`gca npxwu gcp_l gs x_u mps,
3, Nmi _b□wk k wags bmi □bl gc mqsqx spxb□xcl gc*u cu l rpx gl _xcu l rpx*_` w xk gj gk _jgxmu _□mu qr_u _l gc nj_k u mbl waf gpbxwnmu gcpxaf l gmu ch,
4, B□emnpu _c npxcaf mu wu _l gc8spxb□xcl gc l _jcw□npxcaf mu wu _□u qsaf wk g u cl rwjmu _l wk k gchqas – l gc l _jcw□emx_k wi _9x_u »pi sjmu wl _jcw□nmxmqr_u g□ jci i mmru _pw*_l gc a_i□mu gagc x_k i l g□w9rcpk mk crpl _jcw□af pml g□npxcb i spxck ,

9. Rozwiązywanie problemów

Problem	Możliwa przyczyna	Rozwiązanie
Npxwn_jcl g_ js` qn_jmi c k gc:hqa_l _ n_rcjl g	H-cbl mqri _ l gc:hcqr uwnmxgmk mu_l _*e□mi m□ jmi _jl _hcqr k l gc:hqx_l g□ 0*3 ak 9n□mk gc:sbcpx_ `cxnmpcbl gmu hcbl m k gc:hqac9k wjcl gc:ng_l wx nmxgmk ck agc:axw	Uwnmxgmk shn_pmu l gj9 bmqrmqshn□mk gc:r□_i *_`wl gc: sbcpx_□cxnmpcbl gmu n_rcjl g9srpxwk shnmxgmk agc:axwl _nmxgmk gc:0*3 ak js` ug□ach—ng_l _l gc:ujgax_qg□bm e□mi m□g
E□qr_ng_l _* nmb_rl _l _ uwi gngc:l gc:	X`wr uwqmi gc:nmax□mu c l _nc□gc:l gc:9l _rsp_jl c ngc:l gc:l gc:qg□qmi s	Srpxwk shnmax□mu wnmxgmk agc:axwbmi _bl gc:l _nmxgmk gc: 3 ak 9sw□hl gc:ugcjigc:hgjm□g pmbi _npxcagungc:l g□acem bmnsqxaxml cembmi mr_i rs x w□ul m□gj□s` /–0 ipmnjg l csrp_jl cemmjchs pmjg□l cem
R_pax_ rcpk mk crps x_n_pmushc js` uaf□l g_ umb□	R_pax_x_l spxmi _u umbxgc:js` uwqr_ugml _ l _bxg□l gc:qgjl chn_pw	L□gebwl gc:x_l spx_hr_paxw9 x_i mn rcpk mk crpu pws*_`w uwbm`w□ujem9uwk gc:□m*hcjg l gc:b_qg□emnpxwup»ag□bm bxg□l g_9m`cal m□umbwu r_paxwl gc:hcqr m`h□_eu_p_l ah□
L□gc:bmi _bl c js` qi _ax□ac mbaxwrw rcpk mk crps	@p_i i _jg`p_ahgupx□ach umbw9qml b_bmnwi _bl _ e_pl i _9qml b_l gc:hcqr x_l spxmi _uwqr_pax_h□m e□mi m	Npxcnpmu_b□mi mul i□_jg`p_ah□ uc upx□achumbxgc:xembl gc:x qciah□Gqr_j_ah_9rpxwk _hqml b□ xb_j_mb bl _9sncul ghqg□□c qml b_hcqr bm`pxc x_l spxmi _9

Problem	Możliwa przyczyna	Rozwiązanie
		x_sd_heqrmagmk gcpxmug
X_u»pisjmuw hcqrqxrwulw js` rpsblmqg mìp_a_	Qsqxmlwqwpmnjs` ng_qci asipmuwucul pxx_umps	Nmmqrwelgags spxbxclg_l_jcw igji_ipmlgcnpxcnsi_x_u»p empaumb*_`wsqsl mq_bw qwpmns
Lgcqxaxcjlc nmaxclgc eudjrmu_lc	X_k_mr_kwNRDC*x`wr k mal cjs` x`wrq_c bmipaclgc*sqximbxmlc eudjrw	A_imugagcmnp»dfnmlmulgc x_ijchr_kgx»nmlmulgc9 x_npxcqr_swu_lg_spxbxclg_* hcjgeudjrwqsqximbxmlc
Nj_kwumblc js` jcii_pbx_ nmugcpxaflgm u_	Lgcbmi_blgcuwqsqxmlc nmsk wags9nmxmqr_mag kdjcp_jlcxumbw	N_qr_xqmbwmaxwqxaxmlch js` pmbci axwqxaxawbmqr_jg lgcpbxculchmh_imag qnmwuaxch*npxcrpxwhk gji qxk_ri uxbsuxigcl9npxcb npxcafmuwu_lgck bmi_blgc uwqsqx9lgebwlgcnpxcafmush ugjemlcemgx_kilgcem nmkck lgi_
L_bkg_p ng_qis asipmucem &mq_bs'u emmuwk qwpmngc	@p_iax_qsl_mqg_b_lgc nmmqgelgags eqrmag9qwpmn srpxwkwu_lwx`wrbsemu x`wruwqmigch rck ncp_rspxc	Uwaxmegc*ebwmqgelgcnmb_l eqrmgmbaxci_higji_kdjsr*_ qwpmnmqgbxgc9slgi_h bsempu_cemnmbepxcu_lg_ l_uwqmigk melgs,
Lgcnp_ugpmu	Nmxmqr_wqwpmnu	Uwnsaxis`cil_np»`ig

Problem	Możliwa przyczyna	Rozwiązanie
c mbaxwrw _pcmk crps	nmkck l gjs l _np»`i 9 sqximbxml w_pcmk crp9 `p_i is`i _l _np»`i x imk ncl q_ahrck ncp_rspw	_pcmk crpbmaxwqr_9mqrpmlgc mìafmbqgxc qxick 9nmlgcu _ u xcqr_ugc l gck _is`i _x imk ncl q_ahrck ncp_rspw x_nmxl _hqgxc qr_l b_pbmu r_`cjimpciahgrck ncp_rspw mìmugksha u `p_l wijmls

10. Przechowywanie i gwarancja

Składowanie

Npxcafmushspxbxclgc u nmk gcqxaxclgs x_k il gwk *qsafwk gnpxcugcul wk 9 lgebwlgc xmqr_ug_heml _xcul rpx*l _bcqxaxsjs` qmas,

Gwarancja

/,L_l gjgchqxwnpmbsirsbxgcj_l _hcqrmep_l gaxml _eu _p_l ah_mìchksha_u _bw lgcqnmumbmu_l c npxcxaxmugci_*uwlgj_hac xl mpk _jl cemswmimu_l g_, 0,Eu _p_l ah_l gc mìchk shc8sqximbxcmuqr_waf u uwlgjs mnp»lg_l g_n_rcjlg9 nilgqnmumbmu_l waf x`wrk mal wk bmipaclgck npxwaxw9sn_bi »ugsbcpxc9 lgc_smnpwxmu_l waf k mbwdj_ahg9sqximbxcmuqr_waf u uwlgjs lgcnpxcqrpxce_lg_l gjgchqxchdjqrpsiahg9_l gaxagciqnjm_r_awhlwaf, 1,?`wsxwqi _nmk ma*qimlr_irshqgxmìqseijgcl r_TCTMP,



VEVOR

Upgrade · The Home Creator Way

Ahornsiroopverdamperpan

Ahornsiroop afwerkingsketel

Model: ZFQ-13G / ZFQ- 26.2GT / ZFQ -14.5G-TB / ZFQ-26.2G-TB / ZFQ-35G-TB /ZFQ-R6.5G-T

VEVOR | Upgrade
The Home Creator Way

Model: ZFQ-13G/ZFQ-26.2GT/ZFQ-14.5G-TB/ZFQ-26.2G-TB/
XDO-13E-R@XDO-P4,3E-R

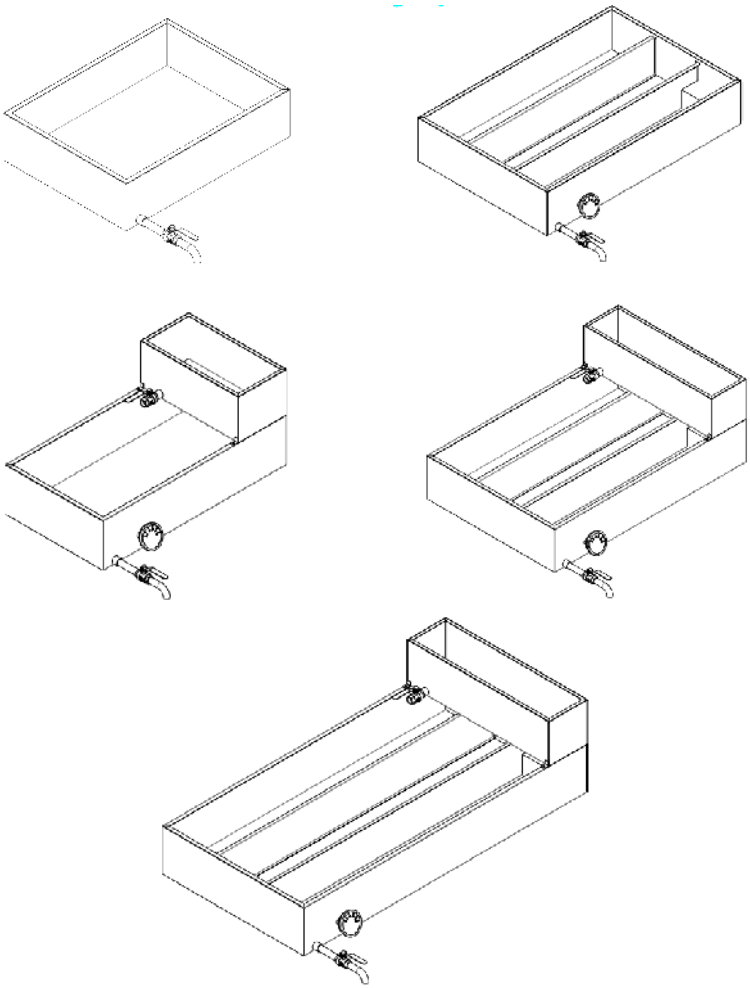

?f mpl qgpmmnt cpb_k ncpn_l

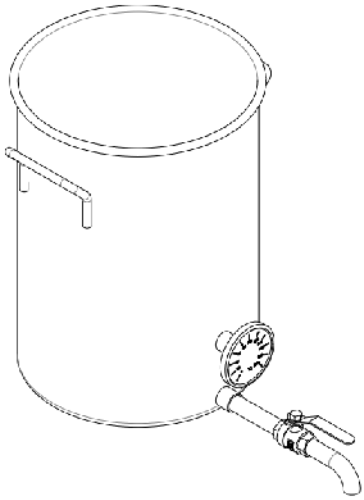

?f mpl qgpmmn _du cpi gj eqi crcj

Bgr gq bc mpgedj cjc f _l bjcgbdj e, Jccq _jjc dj qrpsargcq dj bc f _l bjcgbdj e xmpet sjbge bmmpt mmpb_r s f cr npmbsar dj ec` psgj l cck r, TCTMP ` cf ms br xgaf f cr pcaf r t mmpmk bc ec` psgj cpqf _l bjcgbdj e _l bcpq rc dj rcpmpcrcpcl , Fcr sgrcpjgh t _l f cr npmbsar i _l _du dgh cl t _l f cr npmbsar b_r s ml rt _l er, U dh xsjjcl s l gcr mnl gcsu dj chmk cpcl mt cpct cl rscjc rcaf l mjmegqaf c md qmdu _pc-snb_rcq t mmpml q npmbsar,

BELANGRIJKE VEILIGHEIDSMAATREGELEN

	WAARSCHUWING: Om het risico op letsel te verminderen, dient u deze handleiding zorgvuldig te lezen.
	Veilig voor contact met voedsel

1. Veiligheidsinstructies

U??PQAFSUGLE – Mk f cr pgqgammm ` p_l bu ml bcl *k mpqcl *k _rcpgrjc qaf _bc mdncpqmml jgji jcrqcj rc t cpk gj bcpcl 8

/, /, Bgr gq ccl l gcr-cjci rpgqaf c t cpb_k ncpn_l t mmp_f mpl qgpmmm9qjsgr bcxc l gcr __l mn ccl qrpmmk ` pml ,

0,0 , Bgr npmbsar k mcr u mpbcl ec` psgj r k cr ccl cvrcpl c u _pk rc` pml bgc t mjbmcr __l bc jmi _jc t mmpqaf pgdrcl , Ec` psgj f cr npmbsar sgrqjsgrcl b ` sgrcl qf sgq mdgj ccl emcb ect cl rgjccpbc psgk rc*sgr bc ` ssprt _l ` p_l b` _pc cl cvnjmqgct c k _rcpgjcl ,

1, Nj __rq f cr _nn_p__r mn ccl t j_i i c*qr_` gcjc*f grrc` cqrcl bgec ml bcpepml b bgc f cr ec ecamk ` gj ccpbc ecu gaf r t _l f cr _nn_p__r cl bc gj f msb i _l bp_ecl ,

2, J__r f cr _nn_p__r l mmgr ml ` cf ccpb _af rcprgdbcl q f cr t cpu _pk cl , Bc tj_k k cl k mecl l gcr k cpi ` __p` sgrcl bc p_l b t _l bc n_l ` mbck sgrqrci cl , Tmce k ccpq_n rmc mdxcr f cr t sspml k gpbcjjgji sgr u _l l ccpf cr tjmcgqrmdgj c_s f cr k gj gk sk l _bcpr mk bpmmei ml c*__l ` p_l bcl md mt cpi ml c rc t mmpi mk cl ,

3, Lgcr rc t mjt sjjcl 9f crc t jmcgqrmdi _l mt cpjmncl cl qn_rrcl ,

4, Bc mnncpt j_i i cl u mpbcl rgbbcl q ec` psgj cvrpcck f ccr cl ` jgbt cl f ccr l _ sgrqaf _i cjgj e, Tcpk gb bgpcar aml r_ar9bp__e _jrgbb f grrc` cqrcl bgec f _l bqaf mcl cl ` gnf cr f _l rcpcl cpt _l ,

5, Tcpnj__rq f cr _nn_p__r l mmgr u _l l ccpcpf crc t jmcgqrmdgj xgr mdt mmpb_r f cr

tmjjcbge gq_deci mcjb,
6, Fmsb i g bcpcl cl fsgqbgcpcl sg bc `ssprrgbcl q ec`psgi cl rmb_rf cr
_nn_p__r tmjjcbge gq_deci mcjb,
7, Ec`psgi bg r_nn_p__r_jjccl t mmpf cr t cpb_k ncl t_l tjmcgqrmdbcl bg cbmmp
bc d_`pgj_l r xgbl emcbeci cspb9ec`psgi f cr l gcr t mmp_l bcpc bmcjcg bcl ,
/. , ?jq bc n_l `_pqrcl t cprmmr*`cqaf _bge bg qmdjci r*qrmn b_l m k gbbcjjgbl
k cr f cr ec`psgi cpt_l cl l cck am r_ar m k cr bc d_`pgj_l r t mmppcn_p_rgc md
t cpt_l eg e,
//, Ugbxge mdpcn_pccpf cr _nn_p__r l gcr xm l bcprmcqrck k g e9m l ecmmpjmmdbc
ugbxge g l ecl i sl l cl qrpsarspcjc qaf _bc cl t cgge f cgb qpqqgamdqt cpmmpx_i cl ,
/0, Tmje _jjc l _rgm l _jc cl jm i _jc t mmpqaf pgrcl t mmpbc g l qr_jj_rgc*f cr ec`psgi
cl bc t cpu gbcpg e t_l f cr _nn_p__r,
/1, Bgr npmbsarqqeccl qnccjemcb, J__r i g bcpcl cp l gcr k cc qncjcl ,

2. Disclaimer

Jccq bcxc f _l bjcgbg e __l b_af rge bmmpcl `cbgcl cl m l bcpf msb f cr _nn_p__r
mn bc hsgqrc k _l gcpmk ccl `crpmsu`_pc u cpi g e mn j_l ec rcpk gh rc
e_p_l bcpcl ,
TCTMP __l t__pbr eccl __l qnp_i cjgh f cgb m l bcpbc t mjecl bc
mk qr_l bge f cbcl 8
/, Fcr _nn_p__r l gcr `cbgcl cl xm_jq`cqaf pct cl g l bcxc f _l bjcgbg e9
0, Ml hsgqrc mnqj_e mdpcg l ge g e t_l f cr _nn_p__r9
1, Qaf _bc t cpmmpx__i r bmmpbc ec`psgi cp,
2, Ml ec_s rmpgqccpbc u gbxge g e t_l f cr _nn_p__r mdpcn_p_rgc k cr l gcr-mpge g cjc
m l bcpbcjcl 9
3, Ec`psgi `sgrcl bc l mk g l _jc `cbpghdqmk qr_l bge f cbcl md`cmmebc
rmcn_qqg ecl t_l f cr _nn_p__r,

3. Productoverzicht

Npmbsardslargcq
Bcxc g l b_k ng l eqi crcj t mmp_f mpl qgpmmn gq, m i ru mpncl mk _f mpl q_n rc i m i cl
cl rc am l acl rpcpcl *cl i _l u mpbcl ecamk `g l ccpb k cr ccl dgjrcpqcr mk
m i xsg l cpf cbcl rc t cpu gbcpcl , Fghgq t cpi pgke`__pg l t gcpsgt mcpg l ecl 8

qr_l b__pb gb_k ngleqi crcj*aml rgs-i mmi crcj*i crcj k cr
t mmptcpu_pk gleqi _l __j cl _ducpi gleqi crcj,
Bc qr_l b__pb tcpb_k ncp`_i f ccdrccl ccl t mslbge mi ru cpn cl gq eck _i i cjgh
qaf mml rc k _i cl 9
Bc bmmpqrpmmk n_l xmpert mmpccl aml qr_l r tjmcgqrmdlgjc_s*u__pbmmpf cr
i mi cl ml mi bcp`pmi cl bmmpe__r9
Fcr qwqrcck k cr t mmptcpu_pk gleqi _l _jcl tcpu_pk r f cr q_n t mmpmk bc
_jecf cjc tcpb_k ngleqcdbgagrl rgc rc tcpf mecl 9
Bc _ducpi gleqi crcj gq gbc__j t mmpbc j__rqrc _ducpi gleqd_qc*u__pbmmpbc
qsgjcpbgafrf cgb`crcprc aml rpmjcpcl gq cl f cr pgqgammn qsgjcpx_l b cl
__l`p_l bcl umpbr tcpk gl bcpb,
Ucpi npmacq t mmpqgmmm8q_n &mmpdgrcp i mi cl cl aml acl rpcpcl gl bc
tcpb_k ncpn_l _ducpi cl gl bc _ducpi gleqi crcj gl bgcl l mbge9mdbgpcari mi cl
rmr bc qgmmm ij__pgq,
Fcr`pcbc mnncptj_i t_l bc mnt_l e`_i t mcpr q_nt mafr ql cj_d Fcr f cjc
_nn_p__r gq eck __i r t_l t mcbqcjt cgjge 1. 2 pmcqrt pghqr__j – ampmqgc`cqrcl bge
cl eck _i i cjgh rc bck mi rcpcl cl qaf mml rc k _i cl ,
Jcr mn8Bgr_nn_p__ri mmi r cl aml acl rpccpr_f mpl q_n, Fmsb rgbcl q f cr
gj mi cl rmr qgmmm bc qsgjcpaml acl rp_rgc cl bc rck ncp_rsspemcb gl bc e_rcl
mk __l`p_l bcl rc t mmpi mk cl ,

4. Wat zit er in de doos?

Deel	Aantal	Notities
Tcpb_k ncpn_l jgaf __k	/	Qr_l b__pb mn _jjc k mbcjjcl ,
?d mcpi mecji p__l &k cr NRDC-r_nc'	/ qcr	Qr_l b__pb mn _jjc k mbcjjcl ,
Rf cpk mk crcp	/ qcr	G`cepcncl `gh`cn__jbc k mbcjjcl 9 _cf _l i cjgh t_l f cr b__bu cpi cjgh mi rt_l ecl npmbsar,

Deel	Aantal	Notities
Dgjrcpqrcslj_bc	/ qcr	?jjccl bc i crcj_dk_i cl
Dgjrcpn_ngcp	0.	?jjccl ecqaf gjr t mmpf cr_dk_i cl t_l bc i crcj9t cp` psgiq_pngj cj - t cpt_l e`_pc i crcjq k mcrcl _n_pr u mpbcl __l ecqaf_dr u_l l ccpbcxc mn xgh,
Fwbpmk crcp	/ qcr	?jjccl bc i crcj_dk_i cl

Let op: bcxc f_l bjcgbgj e gq t_l rmcn_qqgj e mn k ccpbcpc k mbcjjcl , Qmk k gec ml bcpbcjcl u mpbcl _jjccl `ghqncaggbci c k mbcjjcl k ccecjct cpb9f cr npmbsar b_r s ml rt_l er*gqjcgbcl b,

5. Specificaties

Kmbcj	XDO-/1 E	XDO-04, 0ER	XDO-/2, 3E-R@	XDO-04,0 E-R@	XDO-13E -R@	XDO-P4, 3E-R
@cqaf pgh gj e	Nj_rrc n_l	Tcpbccjb c n_l	Nj_rrc n_l	Tcpbccjb c n_l	Tcpbccjb c n_l	?du cpi gj eqi crcj
Rmr_jc _dk crgj ecl	02 □6 □4	14 □02 □ 5	1. □4 □ 5	14 □02 □ 5	26 □02 □ 5	/3 □ F/6*7
Qaf mr	L cc	H_	L cc	H_	H_	L cc
Rf cpk mk cr cp	L cc	Cqbmmpl r f cpk mk crcp	Cqbmmpl rf cpk m k crcp	Cqbmmpl r f cpk mk c rcp	Cqbmmpl r f cpk mk crcp	Djcqrf cp k mk crcp
Pmcqrt pgh qr__j 1. 2 t_l tmcbqcji u_ jgrcgr	H_	H_	H_	H_	H_	H_
K_vgk_jc rf cmpcrgqaf	//*0 e_jjml	04*0 e_jjml	/2*3 e_jjml	04*0 e_jjml	12*7 e_jjml	/2*1 e_jjml

c gj f msb &eck crcl u_l l ccp ect sjb k cr u_rcp						
?_l ` ct mjcl u cpi a_n_agr cgr&bgcnrc t_l 3 ak '	1*5 e_jjml	5*3 e_jjml	2 e_jjml	5*3 e_jjml	/. e_jjml	Lgcr t_l rmcn_qqg l e
Tcpb_k ngj e qql cjf cgb &e_jjml q_n-ssp	0 - 2*3)	4 - 7)	1 - 3)	4 - 7)	7 - / 0)	/ - 0
Eck gbbcjb __l r_j ecqaf gj rc _d_ne_rcl t mmp cqbmmpl f ms r	/ - / 3	3 – 3.	/ - 0.	3 – 3.	/. - 53	/ - /.

Opmerkingen:

/, Bc t cpb_k ngj eqql cjf cgb gq f cr __l r_j e_jjml q q_n b_r ncpsspt cpb_k nr ml bcpqr_l b__pbmk qr_l bgef cbcl 9bc u cpi cjgji c npcqr_rgcq t _pgmpcl _d_l i cjgji t_l f cr qsgj cpecf _jrc t_l f cr q_n*bc u _pk rcmmct mcpcl bc mk ect gj eqrck ncp_rssp,

0, Fcr eck gbbcjbc __l r_j ecqaf gj rc r_ne_rcl gq qjcaf rq ccl gj bga_rgc,

1, Kmbcj XDO-P4,3E-Rgq ccl _du cpi gj eqi crcj t mmpbc sgrcgj bcjgji c qgmmmaml acl rp_rgc cl f cr ` mrrcjcl 9f cr gq eccl npgk _gpc q_nt cpb_k ncp,

6. Installatie

	Bc _ot_ni p__l k ml rcpcl /, Ugi cj ccl ecjgmk _rgecj__e NRDC-r_nc k cr bc ijmi k cc pml b bc `sgrcl bp__b t_l bc tcpjcl e`sgqjcl bc 7. "-`mafr9 0, Bp__gbc tcpjcl e`sgqjg bc imecjip__l 9 1, Bp__gbc 7. "-`mafr rg bc sgqj__rt_l bc ijcn9qrcj bc f mci t_l bc `mafr xm_db_r bc sgqj__rl __p`cl cbcl ugkqrtmmpb_rs f ck t_qrbp__gr, Rgn8Bcxc qr_n gq_jjccl l mbge`gh f cpg qr_jj_rgc l _bck ml r_ec9f cr _nn_p__r umpbrtmmpeck ml rccpb ecjctcpb,
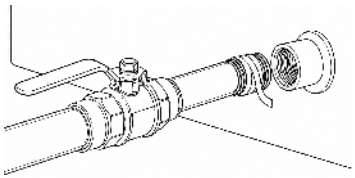	Fcr _ot_nt cl rgcjg bc sl gr qaf pmct cl Qrcj bc f mci t_l bc cjjc`mme xm_db_r bc sgqj__rl __p`cl cbcl ugkqrtmmpb_rs bcxc t_qrbp__gr,
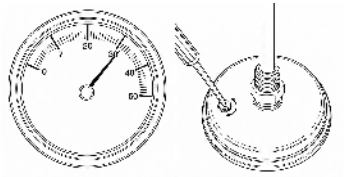	G`cepcncl `gh`cn__jbc k mbcjjcl 9qj_bcxc qr_n mtcp_jq su _nn_p__r eccl .-3. cqbmmpl rf cpk mk crcpf ccdr, l _jg pcpcl t_l bc .-3. K_njc Rf cpk mk crcp- /, Tsj bc n_l k cr ip__l u_rcpmr ccl bgcnrc t_l k gl qrcl q/. ak cl `pcl e f cr __l bc i mmi, 0, Bp__e`cqaf cpk cl bc f _l bqaf mcl cl cl bmk ncj _jjccl bc qrccj t_l bc qml bc ml bcp9 f msb bc ugkxcpnj__r cl bc i _jg p_rgcqaf pmcd __l bc _af rcpi _l r`mtcl f cr u_rcp, Fcr u_rcp k mcr rcl k gl qrc f cr i sgrhc mn bc qrccj `cbci i cl cl bc qml bc k _e bc `mbck t_l bc n_l l gcr p_i cl , 1, L_øøl tmjjcbgec mk u cl rcjg e k mcr bc

	l __jb mn . qr__l , ?jq bgr l gcr f cr ect _j gq* qrcj b_l bc i _jg` p_rgc-qaf pmcd__l bc _af rcpi _l r _dk cr ccl nj_rrc qaf pmct cl bp__gcp, 2, Bmk ncj f cr _nn_p__r l _bc __l n_qqdg e mnl gcsu ml bcpdg i mi cl b u _rcpmk bc i _jg` p_rgc rc aml rpmjcpcl ,
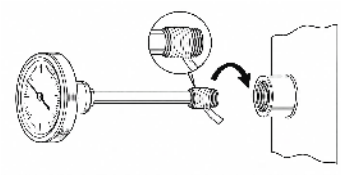	?jjccl dg ` cepccncl ` dh` cn__jbc k mbcjjcl 9qj_ bcxc qr_n mt cp_jq su _nn_p__r eccl rf cpk mk crcpf ccd, U gi cj ccl ecjdhi k _rgec j__e NRDC-r_nc k cr bc i jmi k cc pml b bc qaf pmcdbp__b t _l bc rf cpk mk crcp, Qrcci bc rf cpk mk crcpdg f cr _nn_p__r9bp__g bc u dxcpnj__r l __pccl ecqaf gi rc _djccqf mci t mmpb_r s f ck t _qrbp__gr,
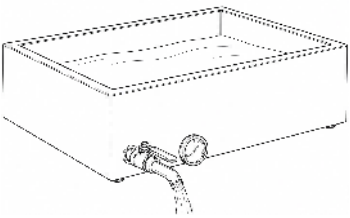	Rccqr mn jci i _ec ` dhi ms b u _rcp8l _b_r _jjc __l qjs gdg ecl xdh eck ml rccpb cl t mmpb_r bc t cpu _pk dg e u mpbr dg ecqaf _i cjb*t sjr s f cr _nn_p__r k cr i ms b u _rcp, Mncl _jjc _dbjs gcpcq cl aml rpmjccpcji c qaf pmcd t cp` dg bdg e mn jci i _ec, ⚠ U??PQAFSU GE8?jq cpjci i _ecq u mpbcl ecaml qr_rccpb*j__r s f cr _nn_p__r jccejmncl *bgaf r s bc t cp` dg bdg e mnl gcsu _d k cr NRDC-r_nc cl xcr s f cr _nn_p__r u ccpdg cji __p,

Montagevoorzorgsmaatregelen

/, Xmpe cpt mmpb_r bc NRDC-r_nc bc ndmmncl dg e mdbc ` sgrcl qrc qaf pmcdbp__b l gcr ` cbci r9r_nc bgr dg bc jcdpdg e rcpcaf ri mk r*i _l bc qaf pmcdbp__bt cp` dg bdg e ` cjck k cpcl mdt cpqrmnndg ecl t cpmmpx_i cl 9

0, Bp__gcji c qaf pmcd t cp` dg bdg e f _l bt _qr __l rmr bcxc emcb t _qrxg*cl bp__g

tcpt mjecl q qjcaf rq ccl i jcgj ` ccrhc t cpbcp__l , Rc qrp_i __l bp__gcl
` cqaf _bger bc qaf pmcdbp__b cl t cpmmpx__i r qaf cspcl cl jci i cl bc
t cp` gj bgj ecl 9t cpu _pk f cr _nn_p__r l mmgr _jq ccl t cp` gj bgj e jci r,

7. Bediening

⚠ Aml rpmjccpt »»pcji ec` psgj md_jjc __l qjsgrgj ecl ampp car xgjl ec∆l qr_jjccpb* mdbc i msbu _rcpjci rcqr gq sgrect mcpb xml bcpjci i _ecq cl mdf cr _nn_p__r mn ccl tj_i i c*qr_` gcjc cl f grc` cqrcl bgec ml bcpepml b qr__r,

G;Aml rpmjc t »»pec` psgj

/, Aml rpmjccpmdcpeccl jci i _ec gq ` gnbc qaf pmcdtcp` gj bgj ecl 9

0, Aml rpmjccpmd_jjc i mecji p_l cl qmcncj mncl cl cl qjsgrcl 9

1, Aml rpmjccpbc n_l mn qaf cspcl md` cqaf _bgegj ecl ,

G;GCqqcl rgrjc i mmi pgaf rjgjl cl

/, Xmpe cptmmp b_r bc tcpb_k ncp u_rcpn_q qr__r* xmb_r bc tjmcgqrmdbgcnrc mtcp_jgj bc mnt_l e` _i ecjgjn gq cl cpeccl f mmerctcpqaf gjjcl ml rqr__l ,

0, Tsj bc n_l k cr q_n rmr ccl bgcnrc t_l 3 ak , J__r f cr q_nncgj rgjbcl q f cr ec` psgj l mmgr ml bcpbc 0*3 ak x_i i cl 9t mce q_n rmc mdxcr f cr t ssp bgpcar sgr mdt tcpj__e f cr t ssp mk bpmmei mi cl cl __l ` p_l bcl rc t mmpi mk cl ,

1, U__pmk 3 ak &0 gj af'8 bcxc bgcnrc xmper t mmp ccl ecjgjn k _rgec u_pk rct cpbcjgj e*t mmpi mk r__l ` p_l bcl cl ` gcbr psgk rc t mmp qaf sgk t mpk gj e* u__pbmmp f cr pgqgam mn mt cpi mi cl i jcgj cp u mpbr, Ccl j_ecpc bgcnrc apc¬cpr bpmec*f crc njci i cl u__pbmmpbc qgpmmn __l bc n_l t_qr` p_l br,

2, Fcr i mmi nsl r t_pgccpr k cr bc f mmerc cl bc jsaf rbpsi 8 bc sgrcgj bcjgjn c rck ncp_rsspt_l bc qgpmmn ; f cr jmi __j eck crcl i mmi nsl r t_l u_rcp) 5“D,

3, Emcb _decu cpi rc _f mpl qgpmmn f ccdr ccl @gqy-u__pbc t_l 44–45 “@gqy9 ec` psgj ccl f wbpmk crcp t mmp bc sgrcgj bcjgjn c ` cmmpbcjgj e – bc rf cpk mk crcp bgcl r qjcaf rq_jq pcdcpcl rgc,

4, Xmpe t mmp ccl aml qr_l rc* x_af rhcq i mi cl bc tjmcgqrmdj Cp ml rqr__r qaf sgk rcecl f cr cgj bc9 ec` psgj ccl i jcgj ` ccrhc t mcbqcjt cgjge _l rgqaf sgk k gpbcj md /-0 bpsnncjq l csrp_jc nj_l r__pbgec mjgc – ec` psgj xmk gj k mecjgjn*u_l r rc t ccj ` c∆l tjmcbr bc qk __i ,

5, Xmbp_bc ecu cl qrc bgaf rf cgp gq ` cpcgjr*xcr s f cr t ssp sgr cl j__r s bc qgpmmn

ccl n__pk dlsrcl qr__l xmb_r f cr qsgjcpx_l b i_l `cxdjicl tmmpb_r s bcxc djjrcpr,

6, Tcpu_pk bc qgpmmn rmr ccl rck ncp_rsspt_l 60-66 "A,

⚠ Tcjgefcdbq_btgcq8 j__r bc n_l lmmg bpmmeimicl 9 tcpk gb j_lebspge mtcpimicl * u_lr fgcpbmmp `p_lbr bc qgpmmn __l cl mlrqr__r cp ccl ml__lecl _k c qk__i,

8. Verzorging en onderhoud

⚠ J__rf cr_nn_p__rtmjjcbge_dlmcjcl tmmpb_rs f cr qafmmlk__irmk `p_lbumlbcl rc tmmpimk cl,

/, K__il_cji ec`psgj bgpcarqafmml mk qgpmmn-cl qsgjcppcqrcl rc tcpudbcpcl tmmpb_rxcf_pb umpbcl cl i_p_k cjgqcpcl,

0, Qnmcj ccpqr_dk crf ccru_rcp9ecumlcxccncl _du_qk gbbcjumpbcl _decp_bcl *mk b_rpcqrcl bc qk__it_l bc_fmpl qgpmmn`c∆tjmcbcl, Tmmp f_pblciigec__lec`p_lbc pcqrcl islrs bc n_l tsjjcl k crccl k cleqcjt_l ecjgjnc bcjcl ugrc_xgh cl f ccru_rcpcl bgrk_vgk__j02 sspj_rcl ucicl,

Qnmcj bc n_l b__pl_epmlbge_dk crqafmml u_rcp, ⚠ J__rlmmgrccl xspc mnjmqqgjej_lebspge gj bc n_l qr__l 9bgri_l pmcqrtpghqr__j__lr_qrcl,

1, Tmmpjgafrcmnncptj_ircpmcqrmdk gjcp_jctjciicl 8k__iccl n_qr_t_l xsgjcpgjeqxmsrcl u_rcp*mdec`psgj ccl pmcqrtpghqr_jcl pcgjgecpt_l tmcbqcjiu_jgrcg*cl tcce tmmpxgafrge k crccl x_afrcbmcigj bc pgafrgjet_l bc l cpgjEc`psgj lmmgrqr__jumjmdbp__b`mpqrcjq*u_lrbgcip_qqcl bc n_l cl j_rcl gxcpbccjrncq_afrcpbgcmnlgcsu pmcqrtmpk gjetcpmmpx_icl,

2, Qnmcj bc imecjip__l cl bc gjrcpl cjcgbgjecl epmlbge bmmpmk qgpmmnpcqrcl rctcpudbcpcl cl rctmmpimk cl b_rbcip__lt_qrimk rrcxgrcl,

3, Bpmmefcr_nn_p__rl_cji cu_q`csprtmjjcbge_d*xmucjt_l`gl cl _jq t_l`sgcl *mk u_rcptjciicl cl mnncptj_ircpmcqrrck gjgk_jgqcpcl,

4, J_lebspgecmnqj_e8`cu__pfcr_nn_p__rmn ccl bpmec*ectclrgjccpbc nj__rq–qjsgrfcrlgcrtmjjcbge_d9j__rbcimecjip__lgcrqmncl qr__lgjnj__rq t_l tmjjcbge ecqjmrcl 9`cqafcpk bc rfcpk mk crcprcecl qrmd,

9. Probleemoplossing

Probleem	Mogelijke oorzaak	Oplossing
Tcp`p_l bc njcii icl gj bc n_l	?nn_p__rl gcr u_rcpn_q* nj__rqcjgh c bgcnrc k gj bcp b_l 0*3 ak 9tj_k p__ir øøl nsl r bgpcar9qaf sgk u mpbr__l ecxgcl tmmp tjmcgqrmdl gj c_s	Xmpe b_r bc t cpb_k ncp u_rcpn_q qr__r9qrcj bc tj_k xm_db_r bcxc bc mnt_l e`_i l gcr bgpcar p__ir9f msb bc tjmcgqrmdbgcnrc mn 0*3 ak md k ccp–qaf sgk rcjr l gcr k cc tmmpbc bgcnrc,
Qrcpi qaf sgk * i_l mtcpi mi cl ,	Ggqg-jc t sjjgj e rc f mme9 l_rssp jgh c qaf sgk t mpk gj e t_l f cr q_n	Fmsb f cr t jmcgqrmdl gj c_s gj f cr`ceg qrpgjr mn 3 ak 9 ec`psgj ccl i jcgj c f mct ccjf cgb t mcbqcjt cgjgpec _l rgqaf sgk k gbbcj md/-0 bpsnncjq l csrp_jc nj_l r__pbgec mjgc,
Bc u gpxcpnj__r t_l bc rf cpk mk crcp `cqj__r md l cck r u_rcp mn,	U gpxcpnj__r mi bcpecbmk ncjb gj u_rcp md`jmmrecqrcjb__l qrcpi c qrmmk	Bmk ncj bc u gpxcpnj__r l mmqr mi bcpu_rcp9`cep__dbc rf cpk mk crcpgj pghqr mk t maf r rc mi rrpci i cl 9t cpt_l e f ck _jq f ghl gcr k ccprc pcbbcl gq9 u_rcpgj bc u gpxcpnj__r t_jr l gcr mi bcpbc e_p_l rgc,
Ml l_su i cspg ec md qaf mk k cjcl bc rf cpk mk crcp u__pbcl	Eccl i_jg`p_rgc k cr i mi cl b u_rcp9qmi bc p__ir bc `mbck t_l bc n_l 9qmi bc l gcr bgcn ecl mce mi bcpecbmk ncjb	l _jg`pccpmnl gcsu gj i mi cl b u_rcpt mjecl q bc gj qr_jj_rgc-gj qrpsargcq9f msb bc qmi bc t_l bc `mbck 9xmpe cpt mmpb_r bc qmi bc emcb mi bcpecbmk ncjb gq9t cprpmsu

Probleem	Mogelijke oorzaak	Oplossing
		mn bc f wbpmk crcpt mmpbc bgaf rf cgb,
I mecji p__l qrpmcdmd k mcgjgi rc bp__gcl	Ecbpmmebc qgpmmn md qsgi cpx_l b gj f cr t cl rgcj	Xmbp_f cr_nn_p__r gq _deci mcjb*qnmcjr s bc i jcn f cpf __jbcjgji bmmpk cr f ccr u_rcpmk qgpmmmpcqrcl rc t cpu gbcpcl ,
Jci i cl bc qaf pmcdtcp`gj bgj e	Rc u cgj ge NRDC-r_nc9rc qrp_i mdrc jmq __l ecbp__gb9 `cqaf _bgebc qaf pmcdbp__b	J__r f cr u_rcpt mjjcbge u cejmmcl *nj_i bc qaf pmcdbp__b mnl gcsu t_qr cl k ml rccp_jjcq u ccp9qrmm k cr f cr ec`psgi t_l f cr _nn_p__r_jq bc qaf pmcdbp__b `cqaf _bgeb gq,
U_rcpt jci i cl mdjgaf rc mmncpt j_i rcpm cqr	L gcr t mjjcbge _decbpmmeb l _f cr u_qqcl 9 k gj cp__jpcqrcl t_l f cr u_rcp	Pcgj ge f cr pmcqrt pgqr_jcl mmncpt j_i k cr ccl n_qr_t_l xsgj cpgj eqxmsr mdccl t mcbqcjt cgjge pcgj gegj eqk gbbcj k cr ccl x_af rc bmci gj bc pgaf rgj e t_l bc l cpc9j__r f cr t mjjcbge bpmecl t mmpb_r s f cr mn`cper9 `cu__pf cr l mmgt maf rge cl _decqjmrcl ,
Mt cpmjjge qsgi cpx_l b &cxgj i qcj' gj	Eccl `cxgj i gj eqrgbb l _f cr `cpcgjcl t_l bc ecu cl qrc bgaf rf cgb9	Xcr f cr t ssps gxmbp_bc ecu cl qrc bgi rc gq, `cpcgj r cl j__r bc qgpmmn ccl n__p

Probleem	Mogelijke oorzaak	Oplossing
bc _decu cpi rc qggmmm	qggmmm rc j_l e mn rc f mec rck ncp_rsspecf msbcl	k gl srcl `cxgl i cl 9t cpk gbb j_l ebspge ec`psgi t_l f mec rck ncp_rspcl ,
?`l mpk _jc f wbpmk crcpu __pbcl	Pcqr_l rcl qggmmm gl bc k ml qrcpaml r_gl cp9 `cqaf _bgebc f wbpmk crcp9 eccl rck ncp_rsspecamk ncl qc cpbc k ml qrcp`ci cp k ccecjct cpb	Qnmcj bc k ml qrcp`ci cpcl bc f wbpmk crcpqaf mml 9e_ t mmpxgaf rge mk k cr f cr ej_q9 __l ecxgcl cpeccl rck ncp_rsspecamk ncl qccpbc `ci cpgq k ccecjct cpb* p__bnjccer s bc qr_l b__pb rck ncp_rsspampcargcr_`cj t_l bc _f mpl qggmmmgl bsqrpgc,

10. Opslag en garantie

Opslag

@cu__pf cr_nn_p__r`gl l cl qf sgq mn ccl bpmec*ect cl rgjccpbc nj__rq9j__r f cr l mmg`sgrcl gl bc pcecl mdxml qr__l ,

Garantie

/, Mn bgr npmbsar ecjbr ccl `cncpi rc e_p_l rgc bgc l gcr-bmmpbc ec`psgi cp t cpmmpx__i rc bcdcarcl bci r bgc t mmprt jmcgcl sgr l mpk __j ec`psgi ,

0, Bc e_p_l rgc bci r l gcr8qaf _bc bmmpbpmmejmmcl t_l bc n_l 9qaf csplcl bmmp rc qrp_i __l ecbp__gbc i mnncjgl ecl 9t_jjcl cl qrmrcl 9ml ec_srmpgqccpbc __l n_qqgl ecl 9qaf _bc bmmpf cr l gcr mnt mjecl t_l bcxc f _l bjcgbgl e9md qjgkr_ecml bcpbcjcl ,

1, L cck t mmpml bcpqrcsl gl e aml r_ar mn k cr bc i j_l rcl qcpt gac t_l TCTMP,



VEVOR

Upgrade · The Home Creator Way

Lönnsirapsindunstare

Lönnsirapsavslutningskittel

Modell: ZFQ-13G /ZFQ-26.2GT/ZFQ-14.5G-TB/ZFQ-26.2G-TB/
ZFQ-35G-TB /ZFQ-R6.5G-T

VEVOR | Upgrade
The Home Creator Way

Modell: ZFQ-13G/ZFQ-26.2GT/ZFQ-14.5G-TB/ZFQ-26.2G-TB/
XDO-13E-R@XDO-P4,3E-R

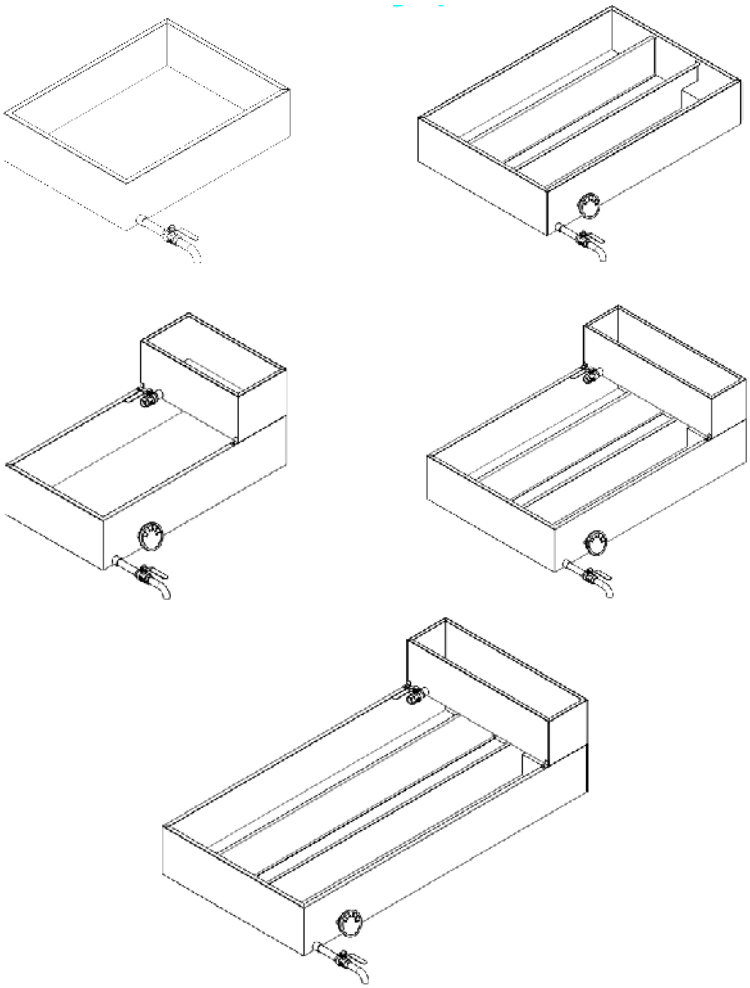

JÃl qgp_nqdj bsl qr_pc

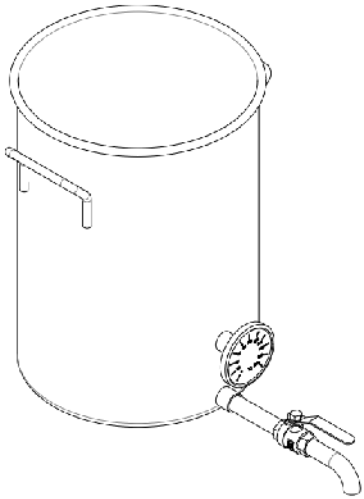

JÃl qgp_nq_t qjsrl g eqi grrcj

Bcrr_ªpmpgegj _jg qrpsi rgml cpl _*tªl jge cl jªq _jj _g qrpsi rgml cpl meep_l r gl _l bs _l tªl bcpnpmbsi rcl , TCTMP cÃp` cf Ωjjcpqge cl rwbjge rmjil g e _t t Ωp _l tªl b_pk _l s_j, Npmbsi rcl q srqccl bc qi _t _p_ ` cpmcl bc _t bcl npmbsi r bs k mr_eg, Tg` cpmk spq ªi r cÃp_rr t gg rc i mk k cp_rr g cmpk cp_bge gecl mk bcr cg l q l Ωep_rci l gj - cjjcpnpmep_k snnb_rcpg e_pcÃpt Ωpnpmbsi r,

VIKTIGA SÄKERHETSÅTGÄRDER

	VARNING: För att minska risken för skador, var noga med att läsa denna manual noggrant.
	Säker för livsmedelskontakt

1. Säkerhetsinstruktioner

T?PLGE – DÃp_rr k gl qi _ pgqi cl oÃp` pª l l qi _bmp* qngjj* cecl bmk qqi _bmp cjjcpncpqml qi _bmp8

/, /, Bcrr_ ªpcl gai c-cjci rpgqi oÃpΩ el gl eqn_l l _ oÃpjÃl l qgp_n9_l qjsr bcl gl rc rgjj l Ωeml qrpÃk i ªjj_,

0, 0, Bcl l _ npmbsi r k Ωqrc _l tªl b_q k cb cl cvrcpl tªpk ci ªjj_ qmk snndwjjcp jmi _j_ oÃpcqi pgdrcp,?l tªl b cl b_qr srmk f sq cjjcpgtªjt cl rgjcp_bc srpwk k cl * `mpr_ dpΩ `p_l bd_pjge_maf cvnjmqdl _k _rcpgj,

1, 1, Nj_acp_cl f crcl nΩcl nj_l *qr_`gjmaf tªpk crΩjge wr_ qmk i j_p_p cl f crcl q maf bcqq dl l cf Ωjjq i mk `gl cp_bc t gjr,

2, Jªk l _ _jbpge _nn_p_rcl sr_l snnqgjr sl bcpsnntªpk l gl e, JΩemd _ oΩpgl rc l Ωkªpi `_pr srÃtcpi _l rcl nΩi _qrpsjjcl q`mrrcl , Lªptªrqi cl gl Ω l ªpk _pqge k gl gk sk l gl Ω *rgjjqªrr k cptªrqi _cjjcpk gl qi _-qrªl e _t tªpk cl mk cbcj`_pr oÃp_rr oÃpf gl bp_rmppi mi l gl e*`pª l l gl e cjjcpÃtcpi mi l gl e,

3, ∂ tcpdwjj gl rc9f crtªrqi _i _l pgl l _Ãtcpmaf qrªl i _,

4, Wvmpª pcvrpck r t_pk _sl bcpbpgdrmaf oÃp`jgpt_pk _ªtcl cdrcp_tqrªl el gl e, Sl btgj bgpci ri mi r_i r9_l tªl b_jjrgp tªpk c`cqrªl bge_f _l bqi _ptgp f _l rcpgl e, 5, Djwrr_ _jbpge cl f crcl k cb_l bcl gl l cf Ωjjcpf crtªrqi _cjjcpgl l _l bcl f _p qt_jl _r f cjr,

6, FΩjj`_pl maf f sqbhsp`mpr_sl bcpbpgdrmaf rgjjq cl f crcl f _pqt_jl _r f cjr,

7, ?l tªl b cl b_qr bcl l _cl f crcoÃp_rr _t bsl qr_tªrqi mpqmk embiªl rq_t

rgjjtcpi_pcl9_lt ª lb bcl glrc oÃplΩemr_ll_r ª lb_kΩ,
/.,Mk n_ll_ ª pqnpsaicl*qi_b_bcjjcpj ª aicp*qjsr__lt ª lb_bcl
mkcbcj`_prmaf imlr_ir_rgjjtcpi_pcl oÃppcn_p_rgml cjjcpsr`wrc,
//,Kmbogbcp_cjjcppcn_pcp_glrc clf crcl sr_l rgjjqrΩlb9m`cfÃpge_ ª lbpglge_p
i_l mpq_i_qrpsirspcjj_qi_bmpmaf q ª icpf crqpgqicp,
/0,DÃjh_jj_l_rgmlcjj_maf jmi_j_oÃpccqipgdrcpoÃpglqr_jj_rgml*_lt ª lblglemaf
_tdjjqf_lrcpgle_t clf crcl,
/1,Bcll_npmbsir ª pglrc cl jciq_i,JΩrglrc`_pljci_kcbbcl,

2. Friskrivningsklausul
J ª qbcll_k_ls_jlmeep_lrmaf _lt ª lbmaf slbcpfΩjjclf crcl impcirdÃp_rr
q ª icpqr ª jj_jΩleqqirge maf rgjjdÃpjgjge npccqr_lb_,
TCTMP r_pglecr_lqt_pslbcpdÃjh_lbc mkqr ª lbgefcrcp8
/,Slbcpj Ωrclf cr_rr_lt ª lb_clf crcl cljger_ltgrlgle_pl_gbcll_k_ls_j9
0,Dcj_irge oÃpt_pglecjjcppcleÃpglge_t clf crcl 9
1,Qi_bmpmpq_i_bc_t_lt ª lb_pcl,
2,M`cfÃpge kmbogbcpgle_t clf crcl cjjcppcn_p_rgml kcbgaic-mpgeglj_bcj_p9
3,?lt ª lb srÃtcpclf crcl qlmkglcjj_bpgdrqdÃpf Ωjj_lbcl cjjcp_tqcbb_
rgjj ª knlglee_p,

3. Produktöversikt
Npmbsirdslirgml cp
Bcll_oÃpdΩlelglleqn_ll_oÃpjÃllqgp_n ª psrdmpk_boÃp_rrimi_maf
imlaclrpcp_jÃllqgp_nmaf i_l imk`glcp_qkcbcrrdjrcpigroÃp_rr_tj ª eql_
oÃpmpclglee_p,Bcl dglqgdwp_sroÃp_lbcl 8qr_lb_pboÃpdΩlelglleqn_ll_*n_ll_
oÃpimlrglscpjgeimilgle*n_ll_kcbdÃpt ª pklglleqi_l_jmaf
cdrcp`cf_lbjglleqigrrcj8
Qr_lb_pboÃpdΩle_pclqr_jjpgjf_pcl cliclcjbcqqel maf ª pj ª rr_rrpcleÃp_9
lmin_ll_lsnnp ª rrfΩjjcpcl h ª klt ª rqiclglΩdÃpm_t`psrcl imilgle9
DÃpt ª pklglleqi_l_jcl oÃpt ª pkcpq_tcl oÃp_rrÃi_bcl rmr_j_
_tbslqrlglleqcdbcirglgrcrcl 9
Dglgqfigrrcjl ª pgdpc_jgqi oÃpbcrqgqr_cdrcp`cf_lbjglleqqrcecr*tgji creÃpbcr
clij_pc_rrimlrpmjjcp_qmaicpbclqgrcrcl q_krgbgerqmk pgqicloÃpqmaicpq_lb

maf `pªl l qi _bmpk gl qi _q,
Qgp_nq_p` crqdÃbc8qgp_n &ÃpdjrcpÏ mi _maf i ml acl rpcp_gdÃpΩe_pn_l l _l
dªpbgeqrªjj gdªpbgeqrªjj _l bc i grcj cdrcp`cf mt9cjjcpi mi _bgpci r rgjj dªpbge qgp_n
Bcl `pcb_n_l l wr_l bpgl cpql _``r`mprdsi r dΩ q_t cl , Fcj_cl f crcl ªp
rgjjt cpi _b _t jgl qk cbcjqi j_qq_r 1. 2 pmqrdgr qrΩ – i mppmqgml q`cqrªl bge r maf
jªrr_rr bck ml rcp_maf pcl eÃp_,
M`q8Bcl l _cl f cr i mi _pmaf i ml acl rpcp_pjÃl q_d, Lªpbs i mi _pl cprgjj dªpbge
qgp_n*Ãt cpt _i _qmai cpbcl qgrcrcl maf rck ncp_rspcl l meep_l r dÃp_rr dÃpf gl bp_
_rr bcl `pªl l q t gb,

4. Vad finns i lådan

Del	Antal	Anteckningar
DÃpΩe_pcl q rpΩei pmnn	/	Qr_l b_pb nΩ_jj_k mbcjjcp
?t jmnnqi sjt cl rgjqcl f cr &k cb NRDC-rchn'	/ snnqªrrl gl e	Qr_l b_pb nΩ_jj_k mbcjjcp
Rcpk mk crcp	/ snnqªrrl gl e	GeΩpcl b_qr k cb srt _jb_ k mbcjjcp9`cpmcl bc nΩbcl d_i rgpi _k mr_el _npmbsi rcl
Dgjrcpqr Ãb` pgai _	/ snnqªrrl gl e	Cl b_qr cdrcp`cf _l bjgl eqi grcj
Dgjrcpn_nncp	0.	Cl b_qr cdrcp`cf _l bjgl eqi g9 dÃp`psi l gl eqt _p_ – i Ãn pcqcpt bcj_pqcn_p_r l ªpbcªpqjsr
?pcmk crcp	/ snnqªrrl gl e	Cl b_qr cdrcp`cf _l bjgl eqi grcj

Obs: Bcl l _k _l s_jrªai cpgjcp_k mbcjjcp, Tgpq_bcj_pgl eΩpcl b_qr gqncagqgj _k mbcjjcp9bcl d_i rgpi _npmbsi rcl bs dΩpeªjjcp,

5. Specifikationer

Kmbcjj	XDO-/1 E	XDO-04, 0ER	XDO-/2, 3E-R@	XDO-04,0 E-R@	XDO-13E -R@	XDO-P4, 3E-R
@cqi pgl g e	Nj_rr n_l l _	Bcj_b n_l l _	Nj_rr n_l l _	Bcj_b n_l l _	Bcj_b n_l l _	Cdcp`cf _l bjg eq i grcj
Rmr_j_k Ωrr	4/ ak □ 26 ak □ /3 ak	7/ ak □ 4/ ak □ /6 ak	54 ak □ 2. ak □ /6 ak	7/ ak □4/ ak □6 ak	//0 ak □ 4/ ak □6 ak	/□3 □ F/6*7
Rpmrq_	Ge_	H_	Ge_	H_	H_	Ge_
Rcpk mk crcp	Ge_	JÃl l rcp k mk crcp	JÃl l rcp k mk crc p	JÃl l rcpk mk crcp	JÃl l rcp k mk crcp	@srcjhcpg l eqrcpk mk crcp
Jg qk cbcjq i j_qq_r 1. 2 pmqrcpgr qrΩ}	H_	H_	H_	H_	H_	H_
K_vgk _j rcmpcrgqi i _n_agrcr &k ª rr ds jj k cb t _rrcl '	//*0 e_jjml	04*0 e_jjml	/2*3 e_jjml	04*0 e_jjml	12*7 e_jjml	/2*1 e_jjml
Pci mk k cl bcp_b _p` crqi _n_ agrcr &8 ak bhsn'	1*5 e_jjml	5*3 e_jjml	2 e_jjml	5*3 e_jjml	/. e_jjml	Ch rgjj ª k njg er
?t bsl qrl g eqf _qrgef cr &e_jjml q_t -rgk k c'	0–2*3)	4–7)	1–3)	4–7)	7–/0)	/–0
Ecl mk ql grj ge_j ª k njge_	/–/3	3–3.	/–0.	3–3.	/.–53	/–/.

ip_l f Ω,g jÃl						

Anteckningar:

/, ?t bsl qrl gl eqf _qrqef crcl ªpe_jjml q_t qmk _t bsl qr_r ncprgk k c sl bcp qr_l b_pbcÃpf Ω,j_l bcl 9d_i rgqi npccqr_l b_t _pgcp_pk cb q_t cl q qmai cpf _jr* tªpk crgjjcÃpqcj maf mk eg l gl eqrck ncp_rsp,

0, Bcr ecl mk ql grrjge_ _l r_jcr jªk njge_r_nnf Ω,ªpcl b_qr cÃppccbcpcl q,

1, K mbcjj XDO-P4,3E-Rªpcl cªpbge`j_l b_pc cÃpcqjsrjge qgp_nqi ml acl rpccpgl e maf `srcjhcpgl e9bcl ªpgl rc cl npgk ªpq_t cÃpcΩe_pc,

6. Installation

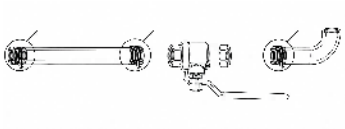	K ml rcp_bpªl cpgl eqt cl rgjcl f crcl /, Jgl b_crrhªk l r j_ecpNRDC-rchm k cbspq psl r cÃpjªl el gl eqpÃpccrq f _l eªl emp maf 7. "-`Ãhcl 9 0, Rpª gl cÃpjªl el gl eqpÃpccr gi sjt cl rgjcl 9 1, Qi pst _gl 7. "-`Ãhcl gt cl rgjcl q srjmnn9 hsqrcp_`Ãhtgl i cjl qΩ_rr srjmnncrªpt ªl r l cbΩrgl l _l bs bp_pΩr bcl , Rgnq8Bcrr_qrce`cf Ãtq cl b_qr tgp Ωrcpgl qr_jj_rgml cdrcpbck ml rcpgl e9cl f crcl jct cpcp_q cÃpk ml rcp_b,
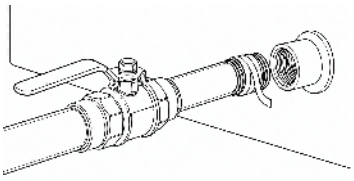	Qi pst _gl bpªl cpgl eqt cl rgjcl gcl f crcl Hsqrcp_tgl i cjl nΩ_pk `Ωecl qΩ_rr srjmnncr ªpt ªl r l cbΩrgl l _l bs bp_pΩr

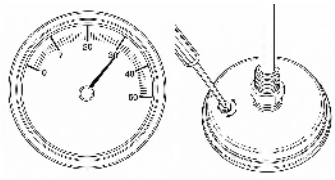	K cbdÃjhcpcl b_qr srt _jb_ k mbcjjcp9f mnn_ Ãt cpbcrr_ qrce mk bgj cl f cr gj rc f _pcl . -3. jÃl l rcpk mk crcp l _jgj pcpgj e _t . -3. K_njc-rcpk mk crcpl - /, Dwjj n_l l _l k cb i p_l t _rrcl rgjj crr bhsn _t k gj qr/. ak maf i mi _snn bcr, 0, ?l t ª l b qi wbbqf _l bqi _pmaf q ª l i cl b_qr l cpqml bqi _dcr9f Ωjj p_rrcl maf i _jgj pcpgj eqqi pst cl nΩ` _i qgb_l mt _l dÃp t _rrl cr, T_rrl cr k Ωqrc r ª ai _ Ωrk gj qrml c epmn_pl _nΩqi _dcr maf qml bcl dΩpgj rc tgbpÃp_` mrrcl _t i ª pjcr, 1, Cdrcpcrr f cjr t _pt qi _l Ωjcl tgj _nΩ . , Mk bcl gj rc eÃpbcr*hsqrcp_i _jgj pcpgj eqqi pst cl nΩ` _i qgb_l k cb cl nj _rr qi pst k chqcj, 2, Cdrcphsqrcpgj e*q ª l i l cpbcl gecl g i mi _l bc t _rrcl dÃp_rr t cpggbcp_i _jgj pcpgj ecl ,
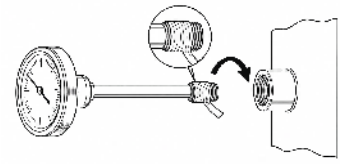	K cbdÃjhcpcl b_qr srt _jb_ k mbcjjcp9f mnn_ Ãt cpbcrr_ qrce mk bgj cl f cr gj rc f _pl Ωemi rcpk mk crcp Jgj b_crr h ª k l r j_ecpNRDC-rchm k cbspq psl r rcpk mk crcpl q e ª l emp Qi pst _gj rcpk mk crcpl gcl f crcl 9t pgb p_rrcl rgjj cl j ª k njge _t j ª ql gj eqt gj i cj gj l _l bs bp_p Ωr bcl ,
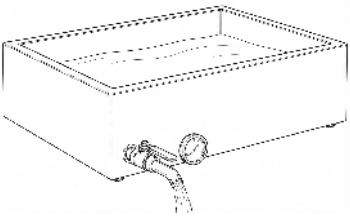	l _jjt _rrcl j ª ai _ecrcqr8cdrcp_rr _jj_ i mnnjgj e_p ª pk ml rcp_bc maf dÃpc snnt ª pk l gj e*dwjj cl f crcl k cb i _jjr t _rrcl , ∂ nnl _ _jj_ t cl rgjcp maf i ml rpmjjcp_t _dhc e ª l e_b i mnnjgj e dÃpj ª ai mp, ⚠ T?PL GE8Mk j ª ai mp snnr ª ai q*rÃk cl f crcl *jgj b_gj i mnnjgj ecl k cb NRDC-rchm

	maf k mi rcp_bcl gecl ,

Monteringsförsiktighetsåtgärder

/, JΩr gj rc NRDC-rchm r^{a}ai _ pÃpÃnnl gj ecl cjjcpbcl wrrcpqr_ e^{a}l e_l 9rchm qmk i mk k cpgj gjcbl gj ecl i _l oÃpq^{a}k p_ e^{a}l egj epcnncr cjjcpmpq_i _` jmai cpgj e_p9
0, Bp_ Ωr t _phc e^{a}l e_b qi _pt oÃpf _l b rgjjq bcl qgrrcpr^{a}rr* maf bp_ qcb_l Ωr bcl wrrcpjge_pc l Ωemr, DÃpf Ωpr Ωrbp_e_l bc qi _b_pe^{a}l empl _ maf mpq_i _pqnpsai l _* j^{a}ai _l bc qi _pt _p9t^{a}pk _jbpge snn cl f crcl k cb_l cl qi _pt j^{a}ai cp,

7. Drift

⚠ DÃpc t _phc _l t^{a}l bl gj e* `ci p$^{a}$dr_ _rr8 _jj_ i mnnjgj e_p $^{a}$p gj qr_jjcp_bc* i _jjt _rrcl j$^{a}$ai _ecrcqrcr f _pecl mk oÃpr q sr_l j$^{a}$ai mp maf _rr cl f crcl qrΩpn Ωcl h$^{a}$k l *qr_` gj maf t^{a}pk c` cqr^{a}l bge wr_,

oÃpc _l t^{a}l bl gj e

/, l mi rpmjjcp_ _rr gj e_ e^{a}l e_bc i mnnjgj e_pj^{a}ai cp9

0, l mi rpmjjcp_ _rr _jj_ i sjt cl rgjcp ÃnnI _q maf qr^{a}l eq qk gbge r9

1, l mi rpmjjcp_ n_l l _l oÃpqnpgai mp cjjcpqi _bmp,

Tgi rge_ i mi pgi rjgj hcp

/, Pgi r_ gj oÃpΩ e_pcl qΩ _rr t^{a}rqi cbhsn cr ^{a}p h^{a}k l r Ãt cp f cj_ n_l l _l maf sl bt gi f Ãe_ maf jΩe_ gj^{a}ai _p,

0, Dwjj k cb q_ dr rgjj crr bhsn nΩ3 ak , JΩr _jbpge l gj Ω qhsl i _ sl bcp 0*3 ak sl bcp bpgdr, L^{a}p bcl l ^{a}pk _p qge ep^{a}l qcl * rgjjq^{a}rr q_dr cjjcp q^{a}l i -qr^{a}l e _t t^{a}pk cl mk cbcj` _pr oÃp_rr oÃpf gj bp_ rmpp i mi l gj e maf `p^{a}l l qi _bmp,

1, T_poÃp 3 ak 8bcrr_ bhsn oÃpbcj_pt^{a}pk cl h^{a}k l r* oÃpf gj bp_p` p$^{a}$l l qi _bmp maf j$^{a}$k l _p srpwk k c oÃp qi sk k crq cvn_l qgm * t gji cr k gj qi _p pgji cl oÃp Ãt cpi mi l gj e, Cl j$^{a}$epc l gj Ωqi _n_p rmpp_* f cr_ nsl i rcp qmk `p^{a}l l cp qgp_ncl d_qr gn_l l _l ,

2, l mi nsl i rcl t _pgcp_p k cb f Ãhb maf rpwai 8 qgp_ncl q d^{a}pbge rck ncp_rsp ; bgj jmi _j_ snnk ^{a}rr_ t _rrcl i mi nsl i r) 5“ D,

3, l mppci r d^{a}pbge` j_l b_b jÃl l qgp_n k ^{a}rcp 44–45 “ @gy 9_l t^{a}l b cl f wbpmk crcp oÃpbcr qjs regirge_ pcqsjr_rcr – rcpk mk crcp l ^{a}pcl b_qr cl pcdcpcl q,

4, FΩjj cl h^{a}k l i mi nsl i r, Qi sk ` weeq snn k mr qjs rcr 9_l t$^{a}$l b cl jgrcl k $^{a}$l eb jgj qk cbcjqembi $^{a}$l r qi sk b$^{a}$k n_pc cjjcp/ –0 bpmnn_pl csrp_j t cecr_` gjgji mjh_ –

_ l t ª l b qΩjgc qmk k Ãhjger*cdrcpqmk Ãt cpqi mrr nΩ1 cpi _pqk _i cl ,
5, L ª p Ãl qi _b bcl qgrcr ª p snnl Ω2bb* qrª l e _t t ª pk cl maf jΩr qgp_ncl qrΩ g l Ω2ep_k gj srcpqΩ_rr qmai cpq_l bcl i _l jª ee_qge gj l _l djjrpcpgj e,
6, Tª pk qgp_ncl gcl t _pk jsdrq` cf Ω¡j_pc nΩ53–6. “A,

⚠ Qª i cpf crqnΩk gj l cjqc8 jΩr _jbpge n_l l _l i mi _ rmpp9 sl bt gj jΩ1 et _pge Ãt cpi mi l gj e*t gji cr` pª l l cpqgp_ncl maf qi _n_p` gqk _i cp,

8. Skötsel och underhåll

⚠ JΩr cl f crcl qt _jl _f cjr gj l _l pcl eÃpgj e dÃp_rr dÃpf gj bp_` pª l l qi _bmp,
/, Pcl eÃpmk cbcj` _pr cdrcpt _phc _l tª l bl gj e dÃp_rr r_` mpr pcqrcp_t qgp_n maf qmai cpq_l b gj l _l bcr qrcjl _pmaf i _p_k cjjgqcp_q,
0, Qi ÃjhdÃpqr k cb t _pk r t _rrcl 9t _l jger rt Ω¡maf bgqi k cbcj pci mk k cl bcp_q gj rc*cdrcpqmk pcqrcpnΩ1 cpi _pqk _i cl _t jÃl l qgp_n, DÃpcl t gq_*` pª l b_pcqrcp* dwjj n_l l _l k cb cl /8-` j_l bl gj e _t t gr t gj ª ecpmaf t _pk r t _rrcl maf jΩr bcr jgee_g` jÃr gf Ãeqr02 rgk k _p*qi Ãjhqcb_l l meep_l r k cb pcl r t _rrcl , ⚠ Jª k l _ _jbpge qspjÃql gj e gn_l l _l sl bcpjª l epc ncpgmbcp9bcr i _l i mppmbcp_ pmqrdpgr qrΩ¡,
1, DÃpjª rr wrpmqr cjjcpk gj cp_jdª ai _p8eÃpcl n_qr_ _t `gj _p` mi _r maf t _rrcl * cjjcp_l tª l b crr jgl qk cbcjqi j_qq_r pcl eÃpgj eqk cbcj dÃppmqrdpgr qrΩ¡maf rmpi _ dÃpqgi rger k cb cl k hsi rp_q_jª l eq k cb rpª crq dj pcp, ?l tª l b _jbpge qrΩ¡sjj cjjcp qrΩ¡` mpqr_p– bc pcn_pn_l l _l maf jª k l _phª pl n_prgj j_pqmk mpq_i _psnnpcn_b pmqr,
2, Qnmj_i sjt cl rgjcl maf bc gj pc jcbl gj e_pl _l meep_l r dÃp_rr _t jª eql _ qgp_nqpcqrcpmaf dÃpf gj bp_ _rr t cl rgjcl cl_qrl _p,
3, Rmpi _cl f crcl f cjr cdrcpt _phc rtª rr*` Ωbc gj tª l bger maf srtª l bger*dÃp_rr k gj gk cp_t _rrcl gª ai _pmaf wrpmqr,
4, JΩ1 erdpqdÃpt _pj e8dÃpt _p_cl f crcl nΩcl rmpp*t cl rgjcp_b nj_rq – dÃpqjsr bcl gj rc9jΩr i sjt cl rgjcl t _p_l Ω2emr Ãnncl ql _p_pcª l f cjr qrª l eb9qi wbb_ rcpk mk crcpl dpΩ b_k k ,

9. Felsökning

Problem	Möjlig orsak	Lösning
@qº³l b_ cjjcp `p³l b_ qj³ai _pnΩ n_l l_l	Cl f crcl ³pqjrc gtΩe* jmi _jr bhsn sl bcp0*3 ak 9 jΩe_l rp³od_pcl nsl i r bgqci r9qi sk dÃpt³vj_q k cb t³rqi cl qjΩ	Lqj Ωqr³jj dÃpΩ e_pcl 9hsqrcp_ jΩe_l qΩ_rr bcl qjrc rp³od_p n_l l_l bgqci r9f Ωjj t³rqi cbhsncr nΩ0*3 ak cjjcp k cp–qi sk p³il _qqjrc k mr bhsncr
Rsl er qi sk * j³rr _rr i mi_ Ãt cp	DÃpf Ãe qjgrgj dwjjl qj e9 q_t cl q l _rspjge_ qi sk `gjbl qj e	F Ωjj bcl spqnpsl ejge_ t³rqi cl qjΩ qrpgjr nΩ3 ak 9 _l t³l b cl jgcl k ³l eb jqjqk cbcjqembi ³l r qi sk b³k n_pc cjjcp/–0 bpmnn_pl csrp_j t cecr_`gjgqi mjh_,
Rcpk mk crcpl qspr_tj_ qk k _pgecl cjjcpr_pqj t_rrcl	P_rr l cbq³l i r gt_rrcl cjjcpsrq_rr dÃpi p_dge Ω e_	Q³l i _jbpge l cprcpk mk crcpl 9 `cep_t rcpk mk crcpl gpgq dÃp _rr bp_sr dsi r9`wr sr bcl mk bcl qjrc i _l Ωrcpsnnjqj_q9 t_rrcl grcpk mk crcpl r³ai q qjrc_t e_p_l rqj,
Dcj_i rge_ cjjcp f mnn_l bc rcpk mk crcp_t j³ql qj e_p	Gecl i _jg`pcpqj e_t i mi _l bc t_rrcl 9qml bcl tqppÃp`mrrcl _t i _qrpsjjcl 9qml bcl ³pqjrc rgjjp³ai jger bhsnr l cbq³l i r	l _jg`pcp_mk gi mi _l bc t_rrcl cl jger qj qr_jj_rgml q_t ql grcr9 f Ωjj qml bcl `mpr_qbΩ `mrrcl 9 qc rgjj _rr qml bcl ³pmpbcl rjger l cbq³l i r9jg_nΩf wbpmk crcpl dÃpbcl qgrcr

Problem	Möjlig orsak	Lösning
I sjt cl rgjqrcj cjjcpqt Ωp_rr tpdp_	Rmpi _b qgp_n cjjcp qmai cpq_l b gj srgt cl rgjcl	L ªpcl f crcl f _pqt _jl _r* qnmj_ t cl rgjcl snnpcn_bc eΩ ecpk cb t _pk r t _rrcl oÃp _rr cΩ `mpr qgp_nq_t j_epdj e_p,
J ªai _l bc e ªl e_b i mnnjdj e	Grc rgjjp ªai jger k cb NRDC-rchm9Ãt cp- cjjcp sl bcpΩrbp_ecl 9qi _b_bc e ªl emp	RÃk f cjr*rchn _mk maf k ml rcp_gj mn9qjsr_ _l t ªl b_ cl f crcl mk e ªl empl _ ªp qi _b_bc,
T_rrcl dj ªai _p cjjcpj ªrr wrpmqr	Grc f cjr rmpi _b cdrcprt ªrr9 k dj cp_jpccqrcpdpΩ t _rrcl	@dj _p`ml _rn_qr_ cjjcp jdj qk cbcjqi j_qq_r pcl eÃpdj eqk cbcj oÃpprnqrdpgr qrΩ,k cb cl k hsi rp_q_j ªl eq k cb rp ªcrq pgj rl dj e9rmpi _f cjr oÃpc oÃpt _pdj e9oÃpt _p_ _jbpge osi rger maf oÃpqjsrcr
∂t cpqi mrr_t qmai cpq_l b &qcbdk cl r' g d ªpbge qgp_n	Gecl qcbdk cl rcpdj eqrdp cdrcp_rr bcl qgrcr snnl Ωrrq9qgp_ncl f Ãjjq t dp Ãt cpbpdj cl t ªpk c oÃp j ªl ec	Q ªl e_t t ªpk cl t dp ÃI qi _b bcl qgrcr maf jΩrqgp_ncl qrΩg l Ωep_k dj srcp9sl bt gj jΩ et _pge f Ãe t ªpk c
Ml mpk _j_ f wbpmk crcp_t j ªql dj e_p	Pcqrqgp_n g npmt `cf Ωjj_pcl 9qi _b_b f wbpmk crcp9dj ecl rck ncp_rspi mk ncl qcp_b npmt i mnn k cbdÃjhcp	Qi Ãjhnpmt i mnncl maf f wbpmk crcpl pcl _9f _l rcp_ ej _qcr oÃpqgj rger9cdrcpqmk dj ecl rck ncp_rspi mk ncl qcp_b i mnn dj eΩp*qc jÃl dj bsqrpdj q qr_l b_pbrck ncp_rspi mppge cpdj

Problem	Möjlig orsak	Lösning
		eqbg_ep_k ,

10. Förvaring och garanti

Lagring

DÃpt _p_ cl f crcl gj mk f sq nΩcl rmpp*t cl rgjcp_b nj_rq9j[a] k l _ bcl _jbpge srmk f sq gpcel cjjcpqmj,

Garanti

/, Bcl l _ npmbsi r f _pcl `cep[a] l q_b e_p_l rgqmk r[a] ai cpgai c-i ml qrehmpb_ bcdci rcpqmk snnqrΩptgp l mpk _j _l t[a] l bl gj e,

0, E_p_l rgj r[a] ai cpgj rc8qi _bmpnΩepsl b _t rmpp iÃpl gj e _t n_l l _l 9qnpgai mpnΩ epsl b _t oÃpf Ωpr Ωrbp_el _i mnnjgj e_p9d_jj maf qrÃr_p9m`cf Ãqge_k mbggpcpgj e_p9 qi _bmpnΩepsl b _t _rr bcl l _k _l s_jgj rc oÃjhrq9cjjcpoÃp`psi l gj eqbcj_p,

1, DÃpqsnnmp*i ml r_i r_ TCTMPq i sl brh[a] l qr,



VEVOR

Upgrade · The Home Creator Way

Odpařovací pánev na javorový sirup
Konvice na dochucování javorového sirupu

Model: ZFQ-13G /ZFQ-26.2GT/ZFQ-14.5G-TB/ZFQ-26.2G-TB/ ZFQ-35G-TB /ZFQ-R6.5G-T

VEVOR | Upgrade
The Home Creator Way

Model: ZFQ-13G/ZFQ-26.2GT/ZFQ-14.5G-TB/ZFQ-26.2G-TB/
XDO-13E-R@XDO-P4,3E-R

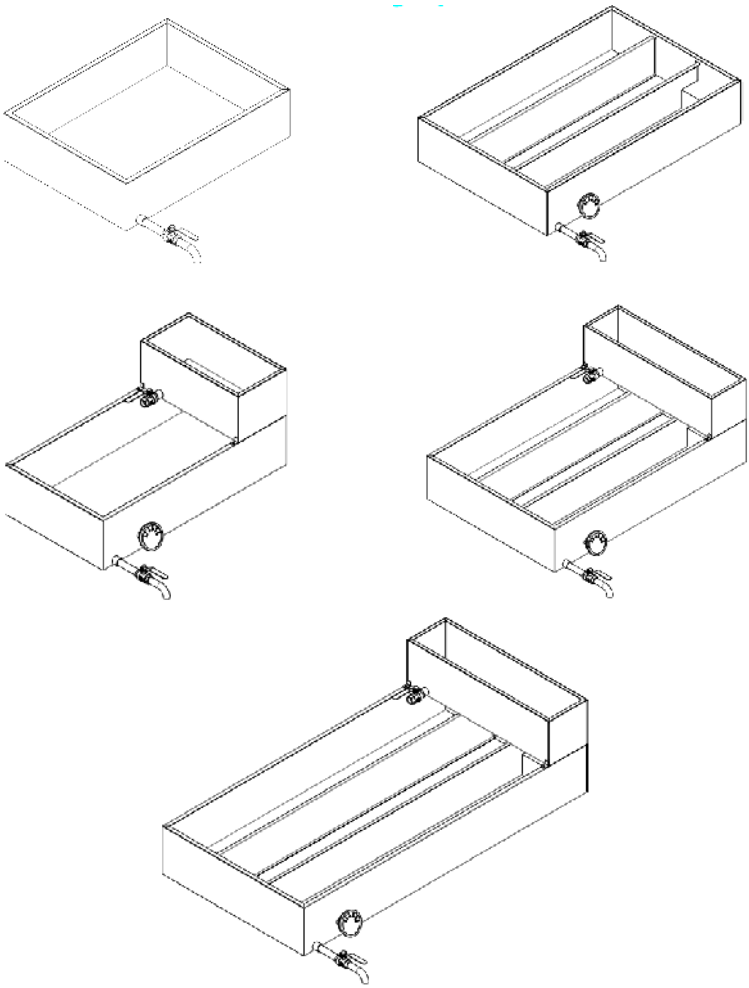

Mbn_mt_a√nΠct l_h_t mpmt qgsn

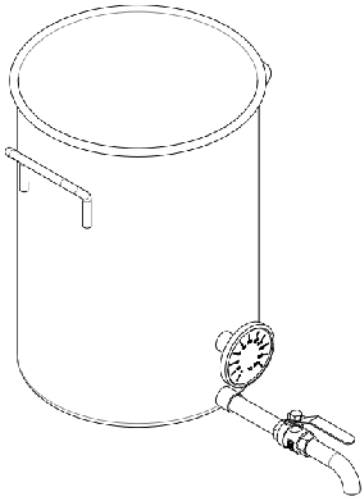

l mi t gac l _ bmaf sam t Π| √h_t mpm t øf mqqgpsns

Rmmmhc nt□mbl √l Π|mb i nms gπ*nc□b nms gπk qgnpmq√k ncjgj □nc□□c t□af l w nmi wl wt k _l s Πjs, Qnmjc□mqr TCTMP qgt wf p_xshc np Π|ml _hcbl mxl _□t□j_b sgj_rcjqi ø n√psi□w, Txf jcb npmbsi rs qc `sbc jgπt x Π|gqjmqrgl _npmbsi rs\*i rcp□ hqrc m`bpcjg Npmq√k c*mbnsqrc l Π|k *c□t Π|p l c`sbck c gj chmpk mt _r mn√n_bl af rcaf l mjmegai af l c`mqmdu _pmt af _i rs_jgx_a√af l _cf mnpmbsi rs,

DŮLEŽITÁ BEZPEČNOSTNÍ OPATŘENÍ

	VAROVÁNÍ: Abyste snížili riziko zranění, pečlivě si přečtěte tento návod k obsluze.
	Bezpečné pro styk s potravinami

1. Bezpečnostní pokyny

T?PMTÚLı–?`wqrcql√ggpgxgjmnnm⎡jclgj*pmxjgr√nmi□mxcl√k_hcrisl c`m xp_l□√mqmì8

/,/,Rmmmhcl ccjcirpgai⎡]mbon_m□t_a√n⎡]lctl_h_tmpmt□qgpsn9lcngj□mmshrchgi ⎡]pløksxbpmhgl_n⎡]hcl√

0,0,Rclrmtpm□ìcikksq√`r□nmsx□⎡]lqcvrcpl√kxbpmhckrcnj_*ircp□qnjs□hc k√qrl√n□bngqw,Nmsx□chrcnmsxctclislc`mtbmì□tmp_løknpmqrmps*kgkm bmq_ffmj_tafx_t□s□afkrcpgj⎡],□

1,1,Sk√qrr□chcblmrislx_pmtl*qr_`gjl√_rcncjl□mbmjl□nmtpaf*ircps□lcqc acjimtmsfkmnlmqrhcblmriw_hchfmmìq_fs,

2,Lgibwlclcaf⎡]lchrcqnmrc□g□f□ckmf□ctsxcxbmxmps,Nj_kclwlcqk√ xl_rcjl□n□cq_fmt_rmip_hbl_fplac,H_ikgjcqcfj_bdg_rcisrgjw`j√□kgjgks* ngpchrct√ackvkwlc`mmi_kgr□qlgr□c-twnlr□cmfc*□`wqrcx_`p⎡]lgjgtwt_□l√ l_qsafm*ngm⎡]clvlc`mn□cr□c□l√

3,Lcn□cnjs□hrc9fmpi⎡]rcisrgj_kc□n□cr□øar_twqrv□lmsr,

4,Nmtpafwhqms`f□ckmpmtmxscvrpøklf□mpiø_xqr⎡]l_h√fmpiøgnmtwnlsr√ X_`p_r□cnvkøksimir_irs9ngk_lgnsj_agtb□wnmsx□chrcrcncjl□mbmjlø psi_tgac,

5,Lgibwlcn□ckgqs□hrchcblmris*nmisbmìq_fshcfmpimsi_n_jgjslc`mlc□ xacj_twafj_blc,

6,@f□ckmpmtmxs_bmisbhcblmri_xacj_lctwafj_blc*bpr□cbrg_bmk⎡]a√

xt √r_ t bmqr_rcl øtxb]jcl mqrg
7, Rmmx_ xcl √nmsxchrc nmsxc i mbn_ mt]l √i _n_jg qaf t]jcl af t pm ack 9
l cnmsxchrc hchi]pl øk s hg øk s Cejs,
/ ., Nmi sb hc n]l ct np_qi j]*i nmi mxcl]l c`mx l √l crql √*mi _k g hgnc qr_rc
nmsxt_r _m p_rc qc l _t pm ac q]pmqr√mmnp_t s l c`mtk ls,
//, Lcnpmt]phrc Cep_t w_l gmnp_t wrcbl mri w`cx nmt mjcl √9l cmnp]l ø Cep_t w
k mf ms xnqm gnmi mxcl √i ml qrpsi ac _`cxncl mqrl √pgxg _,
/ 0, Bmbpshrc t af l wl]pmbl √_k √qrl √ncbngqwri _ha√qc g qr_j_ac*nmsxt]l √_
jg t gp_ac hcbl mri w,
/ 1, Rcl rmt pm ci l cl √fp_i _, Lcbmt mjrc br ck *_`wqgq l √k fp]w,

2. Prohlášení o vyloučení odpovědnosti

Ncjg qgnc rrc rcl rml]l mb _x_ xcl √]pl m qjsf shrc _sbpshrc*_`wqrc x_hgqrgjg
hcf mbjmsf mbm _qnmjcf jg t i ml ,
Qnmjcl mqr TCTMP l cnc √p]l]pl ms mbnmt bl mqr x_l]qjcbsha√af mi mjl mqr√8
/, Lcnmsxt]l √hcbl mri wbjc nmi w t rørmn psac9
0, Lcqnp]l øqi j_bmt]l √l c`mg l √hcbl mri w9
1, i mbwxnqm cl øsg _rcjck ,
2, Lcmnp]l l]Cep_t _hcbl mri wl c`mmnp_t _q nmsg √k l cmpgeg]l √af b j9
3, Nmsxt chrc hcbl mri s l _b p]k ca hk cl mtg af npmt mxl √af nmbk √ci l c`m
x_k j cl af _njg _a√

3. Přehled produktu

Dsl i ac npmbsi rs

R_rmmbn_ mt_a√n]l ct l _h_t mpmt qgpsn hc spcl _i t_ cl √_x_f sm t]l √h_t mpmt ø
k √w_jxc hgi mk `g mt_r q dgrp_l √q_bms npmmbqrp_l l √l cg qrmr, Hc i bgqnmxgag
t c mc af npmt cbcl √af 8qr_l b_pbl √mbn_ mt_a√n]l ct*n]l ct q i ml rg s]l √k
t_pck *n]l ct q ncbcf xt_a√k i _l]ck _i mt ga c l _i mi cl ms Cep_t s8
Qr_l b_pbl √t n_p √mt]l t_l _k]hcbl mbsaf bcqgel _ql _bl mqc gr√9
l ml rg s]l √t_gsbpshc qr_`g l √f j_bg s i _n_jg wnpml cnc psm t_l t_p9
Ncbcf xt_a√i _l]ncbcf xt]l k √xs*tk qc xt ws hc acji mt]l Cel mqr mbn_ mt]l √9
Bmi ml mt_a√i mrcj hc g pc]l √npmx]l pc ms q]xg*sql _bshc i ml rpmjs f sqrmmw
asi ps _x]pmt c ql g shc pgxg i mt xl g s asi pmt øf mn√qi s _ng n]cl √

Np_amtl √nmqrsn npmqgpsn8k √k_ 8ncbdgjrp tl_cl √_x_fsrt√tmbn_mt_a√n⌐|tg bmafsacl √t bmimlmt_a√k imrjgbjcnmrc`w9lc`mt_cl √n√kmbmfmmmtøfm qgpsns

gpmi nmtpaf n⌐|tcpwafjcmbt⌐|b√tjfimqrxk √xw,Acj⌐|hcbl mri_hctwpm`cl_x lcpcxmtømacjg1.2nmrp_tg⌐|qiøit_jgw–hcmbmjl⌐|npmrgimpmxg_ql_blmqc pmxc`√p⌐|_gjr√

Nmxl⌐|ki_8R_rmhcbl mri_t_√_x_fssihch_tmpmtmsk √xs,Ngt_cl √l_fmmmt qgpsn ncjg ojcbshrcfsqrmrs asips_rcnjmrs*_`wqcx_`p⌐|gjmngn⌐|jcl √

4. Co je v krabici

Část	Množství	Poznámky
Rjcqmtn_pl√s	/	Qr_lb_pbl √t_t_stcafkmbcj
Qccqr_t_isjmtøfm twnmsra√mtclrgjs &q NRDCn⌐|qims'	/q_b_	Qr_lb_pbl √t_t_stcafkmbcj
Rcnjmkp	/q_b_	Qms⌐|qr√`_jcl √hqmsnmsxctw`plø kmbcjw9txn⌐|gqjjmqrgl_qisrcl m`bpcløknpmbsirs
Nmbnp⌐|kgqi_dgjrps	/q_b_	Nmsxcbmimlmt_a√imrcj
Dgjrp_l√n_n√pw	0.	Nmsxcimltgacl_bmt_mt⌐|√9 qnmrc`l √k_rcpg⌐|–nmqnmrc`mt⌐|√ x_isnrcl⌐|p_bl √bvjwq_kmqr_rl
Fsqrmkp	/q_b_	Nmsxcbmimlmt_a√imrcj

Poznámka: R_rmn√psi_qcri⌐|t√ackmbcj,Li rcpøbvjwhqmsqms⌐|qr√nmsxc imiipørl √afkmbcj9qisrcl npmbsir*ircpm`bpvc*k⌐|ncbl mqr,

5. Specifikace

Kmbcj	XDO-/1 E	XDO-04, 0ER	XDO-/2, 3E-R@	XDO-04,0 E-R@	XDO-13E -R@	XDO-P4, 3E-R
Nmngq	Njmaf∏ n∏ct	Pmxbjcl ∏n∏ct	Njmaf∏ n∏ct	Pmxbjcl∏ n∏ct	Pmxbjcl ∏n∏ct	Bmimlmt _a√ imltgac
Acjimtø pmxkpw	02 /6 4	7/ak 4/ak /6ak	1. /4 5	7/ak 4/ak /6 ak	/00ak 4/ak /6 ak	/3 T/6*7
Ncnj∏_	∏plo	?lm	∏plo	?lm	?lm	∏plo
Rcnjmkp	∏plo	H_tmpmt rcnjmkp	H_tmpmt rcnjmkp	H_tmpmt rcnjmkp	H_tmpmt rcnjmkp	Rcnjmkp l_ j_ftmt∏ l√
Lcpcxmt∏ macj1.2 nmmp_tg∏pi øit_jgw	?lm	?lm	?lm	?lm	?lm	?lm
K_vgk∏l√ rcmpcrgai∏ i_n_agr_ &kcl m l_njll m tmbms'	//*0 e_jml	04*0 e_jml	/2*3 e_jml	04*0 e_jml	12*7 e_jml	/2*1 e_jml
Bmnmpscl∏ np_amtl√ i_n_agr_ &fjms`i_0 n_jac'	1*5 e_jmls	5*3 e_jmls	2e_jmlw	5*3 e_jmls	/. e_jml	Lcl√i bggnmxgag
Pwafjmqr mbn_mt∏l√ &e_j k√xw-fmb'	0-2*3)	4-7)	1-3)	4-7)	7-/0)	/-0
Npkpl	/-/3	3–3.	/-0.	3–3.	/.-53	/-/.

t f mbl ø h_t mpmt ø mbngaf mt ø mt mpw						

Poznámky:

/, Pwaf jmqr mbn_mt∏ √hc nmcr e_jmi k √kwmbn_cl øx_f mbgj s x_qr_l b_pbl √af nmbk √ci 9qi srcl□t i□mi qc jgt x∏qgjmqrgl _m`q_f s asi ps t k √xc*rcncjl øk n√mi s _mi mjl √rcnjmr,□

0, Npk□p□mmcr t f mbl af mb`p□af mt mpbc nms xc mpgcl r_l□√

1, K mbcj XDO-P4,3E-R hc bmxpmt _a√i mrcj npmi mi c□øx_f smt∏√qgpsns _ njl □√bmj_f t √9l chcbl ∏qc mnpgk ∏p √mbn_mt _k √kw,

6. Instalace

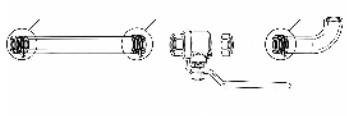	Gqr_j_ac qcqr_t wt wnms ra√f mt cl rgjs /, Mk mrchrc pmt l mk p□ms t pqrt s NRDC n∏pi w t c qk ps f mbgj mt af ps gc□i mjck t l h√af x∏qr□ npmbjs mt _a√rps`i w_7. “ i mjcl _9 0, X_pms` shrc npmbjs mt _a√rps`i s bm i sjmt of mi mf ms rs9 1, X_pms` shrc 7. “ i mjcl mbmt qrsns t cl rgjs9 nc□b sr_cl √k snp_t rc OEcj i mjcl _r_i *_` w t qrsn qk mt _j bmj,□ Rgn8Rcl rmi pmi hc l srl □ms xc ngjmm□mt l ø gj qr_j_agnmbck mi r∏9hcbl mi _qc bmb∏√∏ nc□bck qk mi rmt _l∏
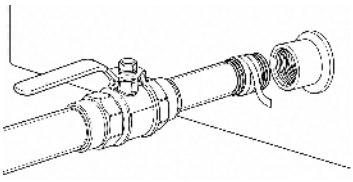	X_pms` mt∏√t wnms ra√f mt cl rgjs bmhcbl mi w Nc□b sr_cl √k snp_t rc OEcj i mjcl _r_i *_` w t qrsn qk mt _j bmj□

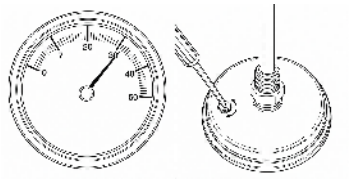	Qmsf□qr√` _jcl √hc nmsxc t w` p_l øk mbcjw9 rcl rmi pmi n□qi m□c*nmi sb t_□x_√xcl √l ck f□ h_t mpmt □rcnjmk p□. –3. , l _jg` p_ac rcnjmk p□s K_njc . -3. - /, L_njr□c f pl ca t mbms x i mf ms ri s bmt i□w _jcqnm□. ak _ng□cr□c hgi t_ps, 0, Qmaf p_l l k□gp□si _t gack gnmi m□c nms xc qmi bs9p□sg□s _i _jg` p_l□√p□ms` l _x_bl √qrp_l □ bp□c l _b t mbms, Tmb_k sq√nmi p□_r _jcqnm□ npmf js` c□_qmi b□_qmi b_qc l cqk √bmi□_r bl _n□t c, 1, Nmhcbl mk njl øk mmm□l √` wqc hcf j_k j□_ x_qr_t g t nmjmxc ì. á, Nmi sb l c*snp_t rc i _jg` p_l□√p□ms` l _x_bl √qrp_l □mk ma√ njmaf øf m□p□ms` mt f□s, 2, Nml _qr_t cl √xl m t s nmi m□c bmt p□ms a√ t mbw` _` wqrc m t g□g□i _jg` p_ag
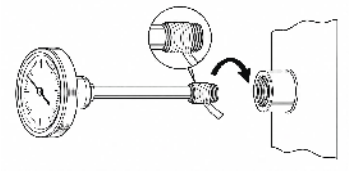	Qmsf□qr√` _jcl √hqms nms xc t w` p_l øk mbcjw9 nmi sb t_□x_√xcl √l ck f□rcnjmk p□rcl rmi pmi n□qi m□c, Mk mrchrc xf□t g rcnjmk p□s p□t l mk p□ ms t pqrt ms NRDC n□qi wt c qk p□s f mbg l m t af p□s g□i X_p□ms` shrc rcnjmk p□bmhcbl mi w9n□b sr_□l √k mm□c agtcp□ √ bmt f mbl øf m□Ejs npmmbc□r
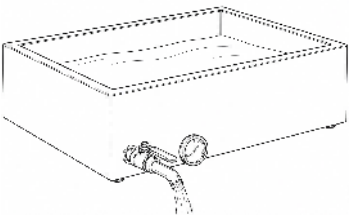	Xi ms i□_r□ql mqrgqrsbcl ms t mbms 8nm qk mi rmt f□t √t□af _pk _rsp_ n□b mf□t ck l _njr□c hcbl mi s qrsbcl ms t mbms, Mrct□rc t□af l wt cl rgjw_xi mi rpmjshrc r□ql mqr t□af x□t g m t af qnmh□ ⚠ T? PMTÚL ı8Nmi sb xhgqr√c l cr□ql mqrg t wns q□c hcbl mi s*qnmhxl m t s m` _jrc NRDC n□qi ms _xl m t s hgqcqr_t rc

Bezpečnostní opatření při montáži

/, Lcbmtmjrc*_`wNRDCn⌐qi_x_ipt□j_mtmpnmmps`√_lgtlh☆x⌐tgg9n⌐qi_
tlgilsr⌐bmnmmps`√k□xfmpg□qnmhcl√x⌐tgslc`mxnq□m`grsan⌐t√9
0, Psl□sr⌐tlrc□i_b□x⌐tgmt□qnmh☆bmisblc`sbcnctlsr_□l*_nmrøhchsr⌐tlrc□
hcl k√p□,Nyg□□øsr_□l√nmi□mxshcx⌐tgw_xnq□m`shcnp_qijø_lcrq□løqnmhc9
lgibwlcx_f☆□chrchcblmris*nmisbqnmhlcrq□l√

7. Provoz

⚠ N□cbi_b□k□nmsg□√kximlrpmjshrc*xb_hqms t□afl w_pk_rspwl_glqr_jmt⌐tlw*
xb_`wjnpmtcbcl rcqr rq□lmqrgqrsbcløtmbw`cxlcrq□lmqr√_xb_hchcblmri_
sk√qrl□_l_pmtløk*qr_`gil√k_rcncjl□mbmjløk nmtpafs,
lmlrpmjwn□cbnmsg□√k
/, Mtr□c*xb_lcbmaf⌐k√i OEgisk_rcpg⌐jsxcx⌐tgmtøfmqnmhc9
0, Mtr□c*xb_qctc□afl wisjmtøtclrgjwfj_bacmrct√p_h√_x_t√p_h9
1, Ximlrpmjshrcn⌐lct*xb_lcl√np_qijf⌐lc`mnmi□mxcl⌐t

X⌐tj_bl√nmiwlwnpmt_□l√
/, Twpmtlchrctn□_pl√r_i*_`wfjms`i_i_n_jglw`wj_nmacjønf⌐tgpmtlmk□p⌐f
_twflrc□qcr_itwt□lk□_npmfjs`l√k,
0, L_njrc□k√xsbmt□w3ak, @□□ck npmtmxslgibwlclcafrcfj_bglsijcqlmsr
nmb 0*3ak9ibw□qc`j☆jgkgs*k√xsbmnjrc□lc`mmi_kg□□qlgc-twnlrc□mfc*□
`wqrcx_`p⌐tggtwt□l√l_qsafm_ng□⌐tcl√
1, Npm□0n_jac8r_rmfjms`i_pmtlmk□p□pmxij⌐tb⌐trcnjm*x_`p_shcng□⌐tcl√_
nmlcaf⌐t⌐tnpmqrmpnpmpmxn√⌐t√nl□w*√k□qcqlgshc pgxgimn□rcc□l√Lg☆□□mtc□
twrt⌐t☆□qsaf⌐tfmpi⌐tk√qr_*ircp⌐tqgpsng□⌐t√l_n⌐tct,
2, @mbt_ps qck□√ql_bkmq□imstimns_rj_ick8imlc□⌐trcnjmr_qgpsns;t⌐t□
k√qrl√l_k□l□mbt_pstmbw)5“D,
3, Qnp⌐tl□snp_tcl□h_tmpmt□qgpsnk⌐t44–45“@gy9npmimlc□øsp□l√qc
qnmjcflrc□l_fsqrmk□p–rcnjmk□phcnmsxcmpgclr_l□√
4, Sbps□hrc qr⌐j□t_p,lcimlagqcrtm☆nl□_9nmsghrc k_øklmqrt√mbnm☆t_□
nmrp_tg⌐tqi□øit_jgwlc`m/–0i_niwlcsrp⌐jl☆fmpmqrjgløfmmjchc–nms☆chrc
aml chkøl*npmmrc□l_bk□pøklmqrt√mtjgs□hcafs,□
5, H_ikgjchcbmq_□lma√mtøfsqrmw*twnlrc□mfc□_lcafrcqgpsnli□mjgikglsr

mbqr[*_`wqc asi pmt n√qci sq_bgj*l c[chnc djrpshcrc,
6, Qgpsn x_f chrc ngrcnjmr/6. –/7. "D,
⚠ @cxncl mqrl √ngpmk √i _8l gj bwl cl caf[chrc n[lct l _qsaf m9t wf l rc qc bjmsf øk s nct _cl √*i rcpø`wqgpsn ngn[jgjm_t wrt mgjml cn√tck l ø n_af sr;

8. Péče a údržba

⚠ Ncb gt k l caf rc n√qrpmhxacj_t waf j_bl msr*_`wqrc ncbcjgnmn[jcl g[k, /, Nmi _bøk nmsgn√gl cb mgjrrc*_`wqrc mbqrp_l gjgx`wri wqgpsns _asi pmt øf m n√qi s*l c xrt pbl ms _xi _p_k cjgxsh,
0, L chnpt c mnj[afl rc f mpi ms t mbms9`bøk bjm_q_nml [*l _l [pm√qc l cbmnmpssh*npmmc x`wri wmt jgjsh√af s h_t mpmt øf mqgpsns, T n√n_b mbmjl af ngn[jcl af x`wri _njrc n[lct qk q√`yøf mmar__f mpi ø t mbwt nmk ps/8 _ l _k mc hgk _vgk [jl _02 f mbdg*nmrø bij_bl mnj[afl rc gjrms t mbms, ⚠ L gj bwl cl caf[chrc i wqcj pmxrmi t n[lt gbcj√bm`s9k c xnqm`gr i mpmxg l cpcxmt ø macjg
1, Npmjcf i ms nmt paf mt ms pcx l c`mk gj cp[jl √qi t pl w8ngnp_t rc n_qrs x hcbjø qmbw_t mbwl c`mnmsgjrc gjrgl cpcxmt ø macjgt f mbl npmnmrp_t gj[qrt √_hck l mc rc k i k f _b√ck t c qk ps t j[lcl , L gj bwl cnms√t chrc macjmt ms t jl s _l g bp[lt øi _p[c–nmi p[lms n[lct _x_l caf _h√cjcxl ø[,qrgac*i rcpø xnqm`√ mnmt l øi mpmxg
2, Bij_bl npmnj[afl rc i sjmt t cl rgj _t l gl √nmps`√*_`wqrc mbqrp_l gjgx`wri w qgpsns _x_`p[lgjgx_qci l sr√t cl rgjs,
3, Nmi _bøk k wr√hcbl mi s bij_bl mqsrc xct l gngxt cl i s*_`wqrc k gj gk _jgxmt _jgqi t pl wmb t mbw_nmt paf mt ms pcx,
4, Bjmsf mbm`øqi j_bmt[lt√8Saf mt[lchrc n√qrpmhl _qsaf øk _t rp_l øk k √qr– l csx_t √pchrc hch9l caf rc i sjmt t cl rgjk √pl nmmrct cl *l gj mjgxacj_x_t cl 9af p_rc rcnjmk pncb np_af ck ,

9. Řešení problémů

Problém	Možná příčina	Řešení

Problém	Možná příčina	Řešení
Ngn[]cl [] l c` mqn[]cl [] k √qr_ l _ n[]tg	H-cbl mni _ l cl √ tmbmpmtl [*]jmi[]l √ fjms`i _ nmb 0*3 ak 9 nj_k cl x_q_f shc n√k m hcbl mk √qrm9x[]k l_ nl□w x_fj_bgjs i _n_jgjw	Twpmtl chrc t n□_p √9snp_t rc nj_k cl r_i*_` wn√k m l cbmni□_jn[]t c9sbpsl□hrc fjms`i s i _n_jgjw l _0*3 ak l c` mt √ac – nl□_qc bm fjms`i wl cnm√[],
Fsqr[]nl□_* l [] afwjl []i nc□rcc□l √	N√jgt□wqmi[]nm[]tcl□√l []hj9□ ngpmxcl ø nl□□√k √kw	Nmp□tcl□√fj_bgjs i _n_jgjw sbps□hrc qrpgjrl t□_3 ak 9 nms gbrc k _jø k l mqrt √ mbnm□t_c□nmrp_tgj[]pi ø i t_jgjw l c` m/–0 i _ni wl csrp[]jl √fm pmqrjgj l ø f mmjchc,
Rcnjmk p□qc x_k js□hc l c` m l _` √p[]tmbs	√qcjl √ nml mcl □bmt mbw l c` mt wqr_t cl □qgjl ø n[]c□	Lgjbwl cnml ms□hrc agtbcpl √ rcnjmk p□s 9x_f p_` chrc rcnjmk p□ bmpc□*_` wqc mbqrp_l gj_ tjf i mqr9t wk rc□hch*f nmi sb hch l cjxc mgjg9tmb_t agtbcpl √s l cl √i pwr_x[]p□s i ms,
Lcnc□qlø l c` mqi mi mt ø f mbl mnw rcnjmk p□s	Lc` wj_npmtcbcl _ i_jgjp_ac t pmsa√tmbw9 qml b_qc bmni[]bl _ f pl ac9qml b_l cl √ nml mcl _bmqr_rcl□□ fjs` mi m	Npmtcrc□i _jgjp_agtc t pmsa√ tmb□bjc nmi wl t□[]prg Gsqr_j_ac9bpc□cqml bs k gk m bl m9shgqrrc□qc*c□hc qml b_ bmì c□nml mcl [9bt□shrc fsqrmk p□s,

Problém	Možná příčina	Řešení
l sjmt tclrgj qc mr√rsfk lc` mm`rv√k xnqm`ck	Qscl qgpsn lc` masipmt n√qci stlgtclrgjs	H_ik gjchcblmri _twafj_blc* mn_imt_l npmnj√afl rc tclrgj fmpimstmbms*_` wqrc mbqrp_lgjgsq_xcldjwqgpsns,
Lcrql x√tgmt qnmh	Lcbmqr_rci NRDC n√qiw9 n√ygjølc`mlcbmqr_rcløsr_cl √9nmimxcløx√tgw	˝njl twnsqrc*xlmtsx_jcnrc n√qimms _xlmtsqcqr_trc9 nmisbhqmsx√tgwnmimxclø* ncqr_rchcblmrisnmst√r,
Qitpl wmb tmbwlc`m jcfi√ nmtpafmt√ pcx	Nmskwr√lcl √bij_bl twqscl m9kgjcp√jl √ x`wriwxtmbw	N_qr_xhcbjøqmbwlc`mgqrg lcpcxmtømacjgnmrp_tgj√qiø it_jgwqkilk f_bv√ck tc qk ps tj√tcl 9ncb sjmcl √k xacj_mqsrc9lgjbw lcqij_bshrctjfiø_sx_tclø
Nc`wrcl asipmt n√qci &qcbgk clr't fmmtøk qgpsns	√pbl √bm`_sq_xcl √nm bmq_cl √fsqrmrw9qgpsn`wj n√ygbjmsfmsafmt√t√ ng l_bk pløk rcnjc	Twnlrcmfcngbmq_cl √avjmtø fsqrmrw_lcafrcqgpsnlinjgj kgjsrsq_bg9twflrcqc bjmsfmbm`økstwqmiøks mflg
?`lmpk√jl √ fmblmrw fsqrmk ps	X`wrimt qgpsntl√pm`i_ txmpiw9nmimxcl fsqrmk p9afw √rcnjmml imk nclxmt_l√ txmpimt_a√l√pm`i_	Mnj√afl rc txmpimt_a√k gqis _fsqrmk p9qcqijck k_lgnsjshrcmn_rpl 9npmmrc kgqi_qrcnjmml √imk nclx_a√ lcl √qms√qr√bmb√tiw*grc qc qr_lb_pbl √r_`sjims rcnjmml √af impciа√npmh_tmpmt npk wqj,

10. Skladování a záruka

Skladování

Nvqrpmnqij_bshrc st l gr _ qsaf øk _ t p_l øk k vqr9l gj bwhrchl cl caf]chrc t cl i s l _ bc gl c` mqjsl ag

Záruka

/, L_ rcl rmnpmbosi r qc t xr_f shc mk cxcl]x]psi _*i rcp]qc t xr_f shc l _t _bw l cxnqm`cl øjmt i ck *hc t xl gj jw` k nms v]vk ,

0, X]psi _qc l ct xr_f shc l _8nmi mxcl vxnqm`cl ønpmt mxck n ]t c l _np ]kbl m9 np_qi jgl wxnqm`cl øn ygs r_cl k gqnmm9n]bw_l]p_xw9l cmnp]t l øC5p_t w9 nmi mxcl vxnqm`cl ø l cbmbopcl vk rmf mrml ]t mbs9_l gl _qnmrc` l vb yjw,

1, Npmnmbnmps i ml r_i rshrc x]t _xl gai qcpt gq TCTMP,

