Best Master Furniture™
The Imported Furniture Specialist

MODEL: QT05- E KING BED

ASSEMBLY INSTRUCTIONS

Hours of Operation
MON-FRI 8:00AM - 4:00PM (PT)

TOOLS REQUIRED



Screwdriver
(Not included)

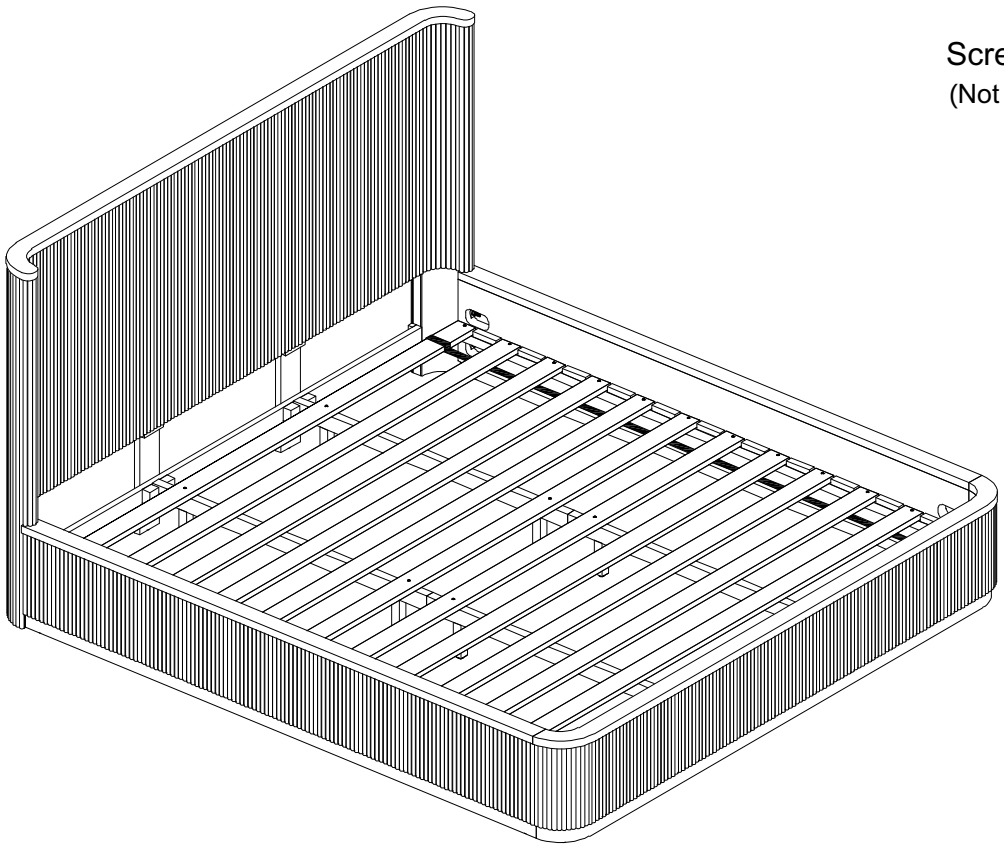



2 - People

Enjoying this product? We'd love your 5-star review!

If you have any issues, our support team is happy to help.

Best Master Furniture™
The Imported Furniture Specialist

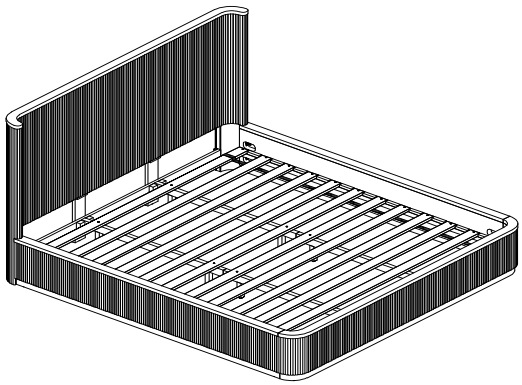

Thank you for your purchase

Monday-Friday
8:00AM - 4:00PM PT

@Email
inquiries@bestmasterfurnitures.com

www.bestmasterfurnitures.com

CHECK BEFORE STATING

Are you missing anything?

Please double check all hardware and parts match the assembly guide before putting the product together. If damaged, wo suggest you put the item back in the box and start your claim or return

Should we send any replacements?

If there are any manufacturer defects or missing pieces please contact us for replacements. If purchased online, please contact the website of where you purchased it from, DIRECTLY

IMPORTANT INFO before assembly:

If there's a problem with the parts do not attempt to assemble the product

• Place all parts on a clean and smooth surface such as a rug/carpet to avoid parts frombeing scratched

• When tightening screws to product do not overtighten until product is fully setup

• If product is too heavy for a single person to carry do not attempt and ask for assistance

• DO NOT DRAG or PUSH item to desired location. Must be camed when moving

• If item is not working as intended please review the assembly guide to see if any stepswere missed or incorrectly built. If there's a problem with part please contact seller foradditional assistance

• Please keep all hardware and small parts away from pets/infants

• Please wear gloves or protective gear to protect from getting cuts

• It is normal for new fumitrue to have an off gassing smell. Please air out furniture near awindow for a few hours or a day before placing it in its desired location

• All products may have a slight color and texture variation due to different shipments,natural materials, screen- resolutions, or lighting in horne. Images are rendered bydifferent devices or websites

Best Master Furniture™
The Imported Furniture Specialist

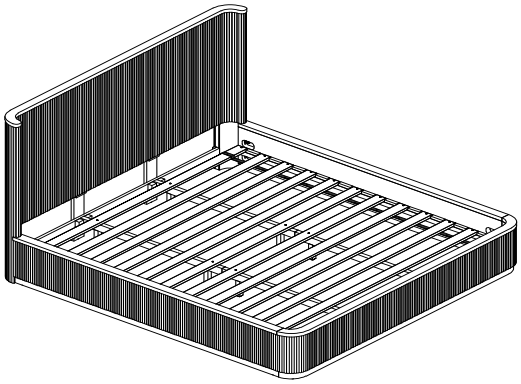

MODEL: QT05-E KING BED

PARTS LIST

Ⓐ 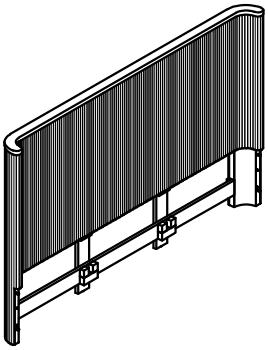 Headboard = 1 pc	Ⓑ 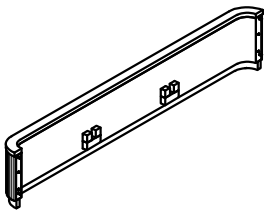 Footboard = 1 pc	Ⓒ 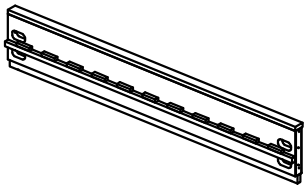 Side rails = 2 pcs
Ⓓ 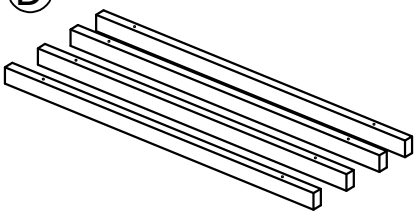 Center rail = 4 pcs	Ⓔ 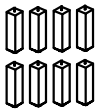 Suport Legs = 8 pcs	Ⓕ 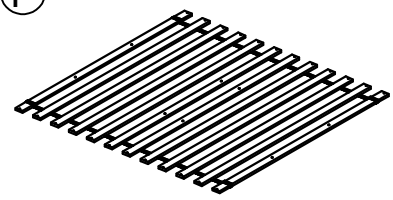 Slats = 12 pcs

HARDWARE LIST

①  Threaded Bolts 5/16''x90mm = 8 pcs	②  Semi lunar washer 5/16"x30mm= 8 pcs	③  Lock washer 5/16'' = 8 pcs
④  Hex Nut 5/16''x12mm = 8 pcs	⑤  Wrench 13 = 1 pc	⑥ 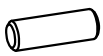 Wood dowel Ø10x30mm = 8 pcs
⑦  Wood screw M4x30mm = 28 pcs		

Best Master Furniture™
The Imported Furniture Specialist

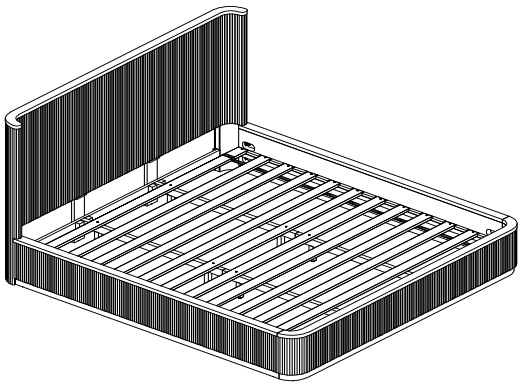

MODEL: QT05-E KING BED

Step 1:

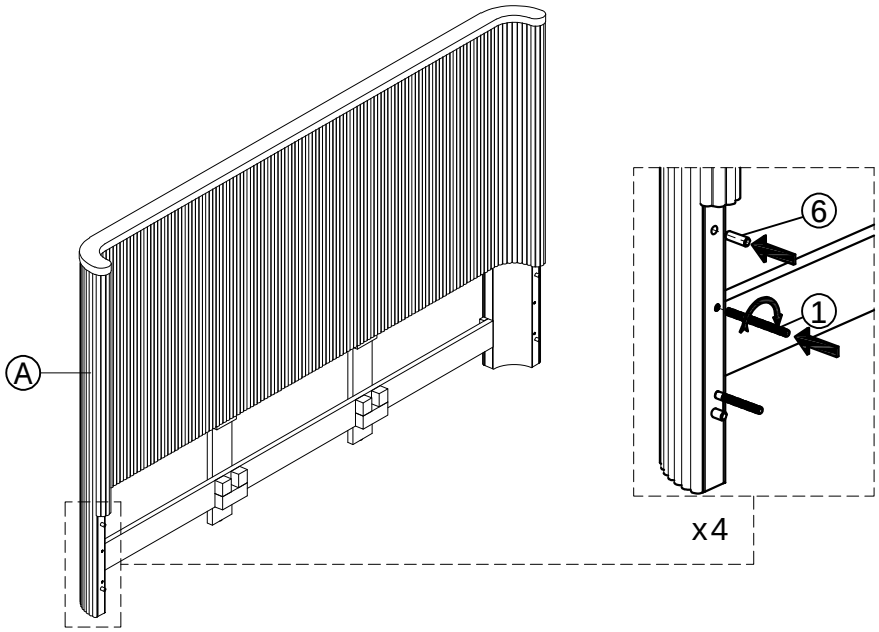

Step 2:

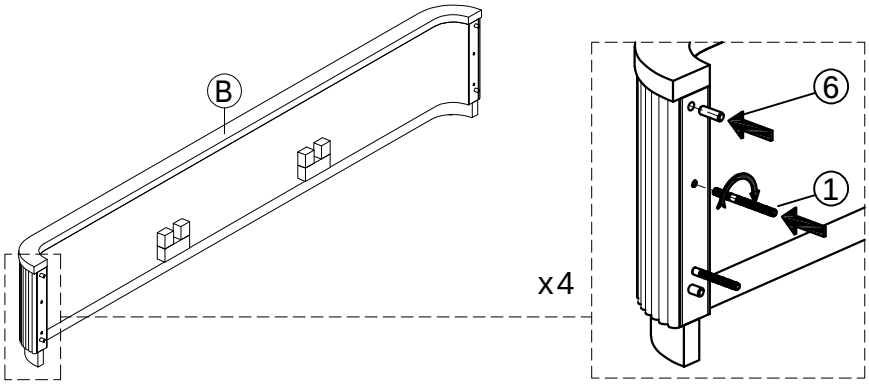

Best Master Furniture™
The Imported Furniture Specialist

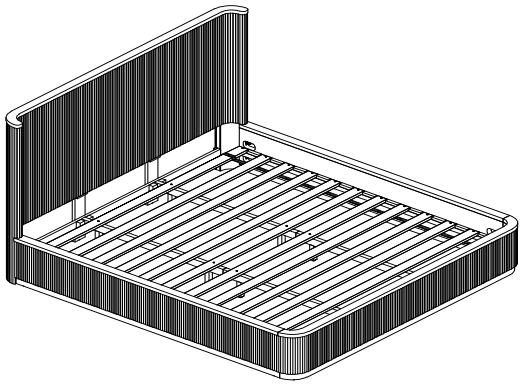

MODEL: QT05-E KING BED

Step 3:

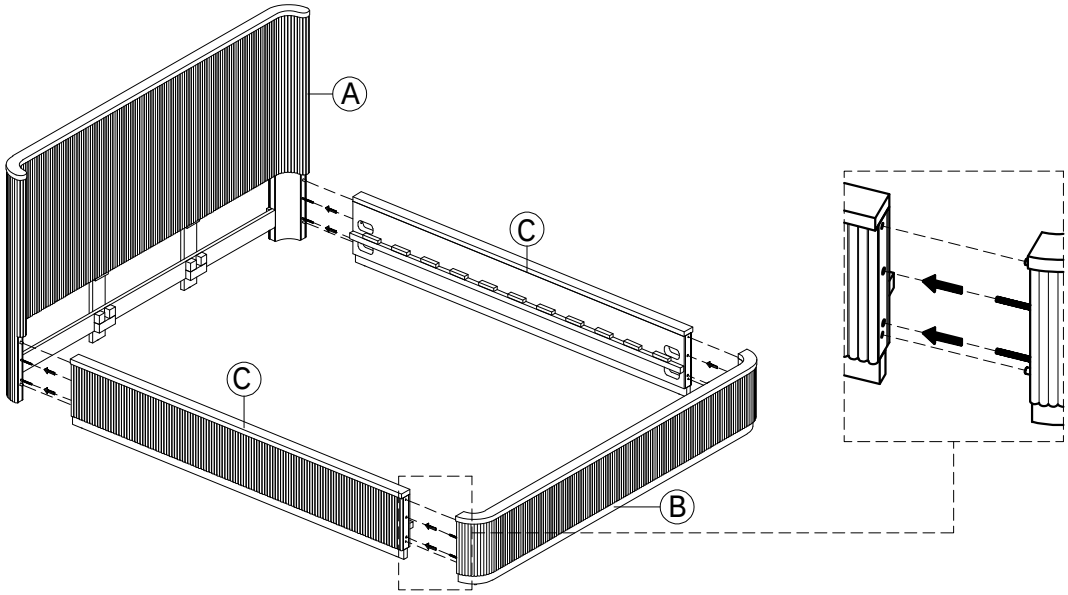

Step 4:

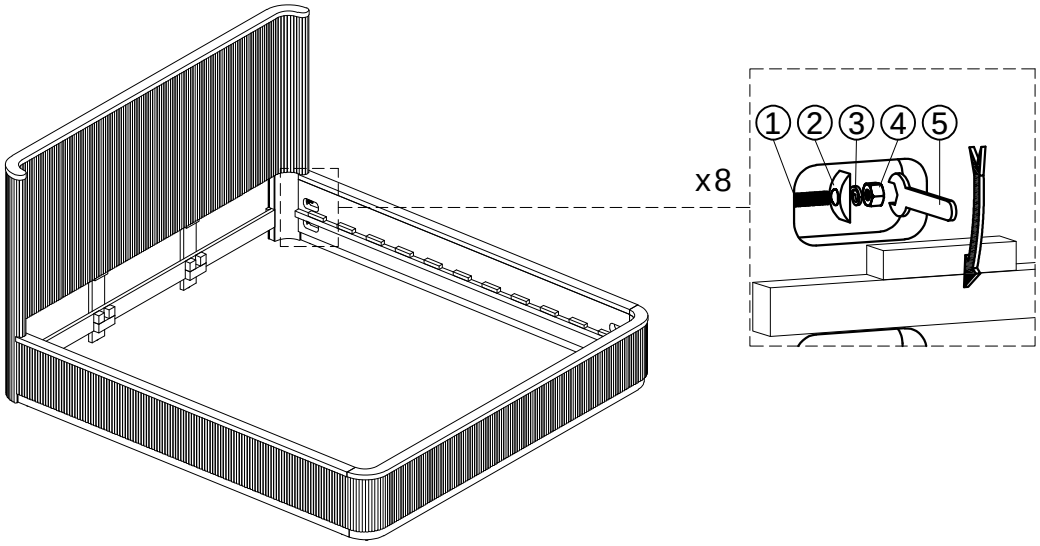

Best Master Furniture™
The Imported Furniture Specialist

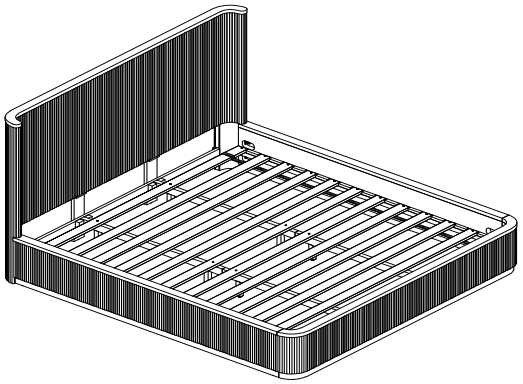

MODEL: QT05-E KING BED

Step 5:

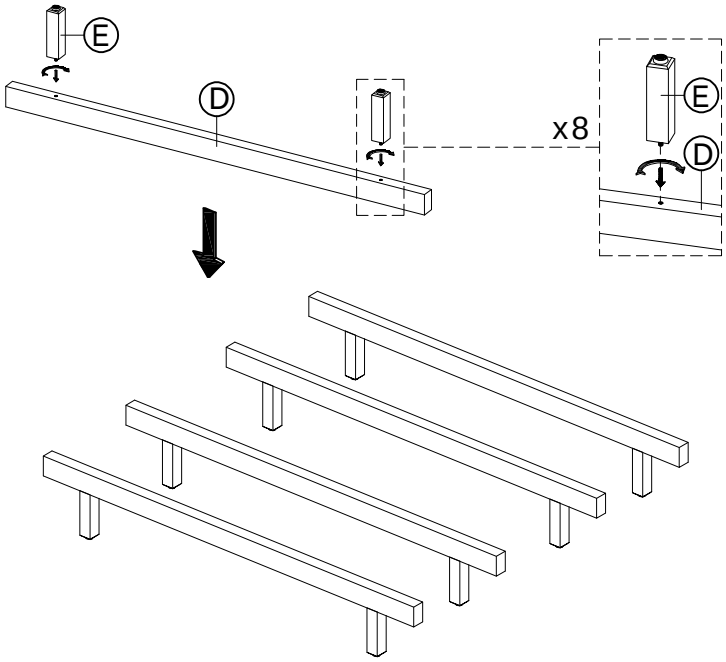

Step 6:

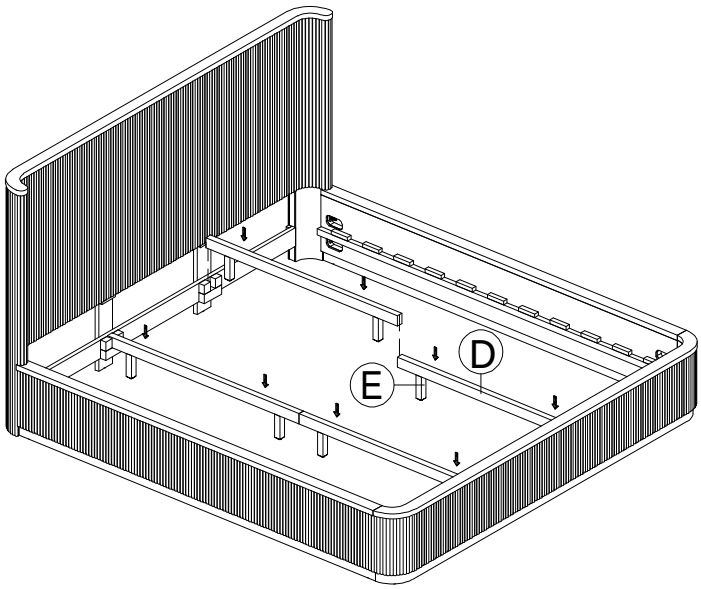

Best Master Furniture™
The Imported Furniture Specialist

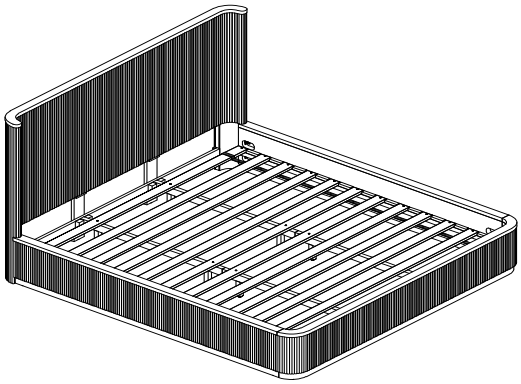

MODEL: QT05-E KING BED

Step 7:

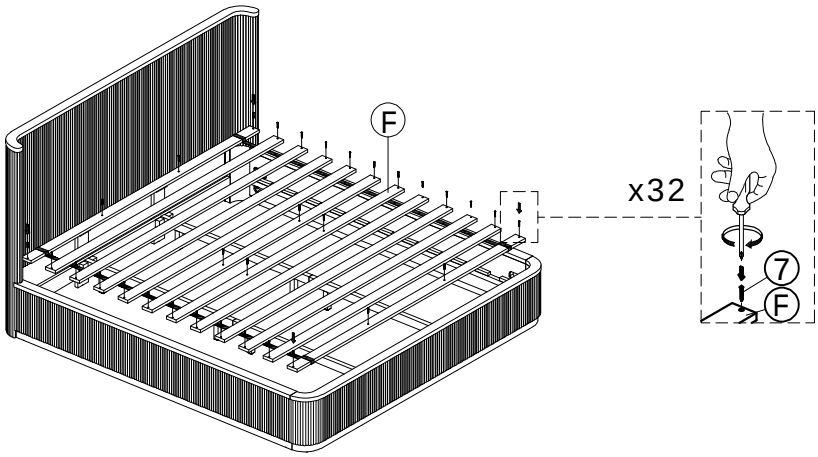

Finished:

