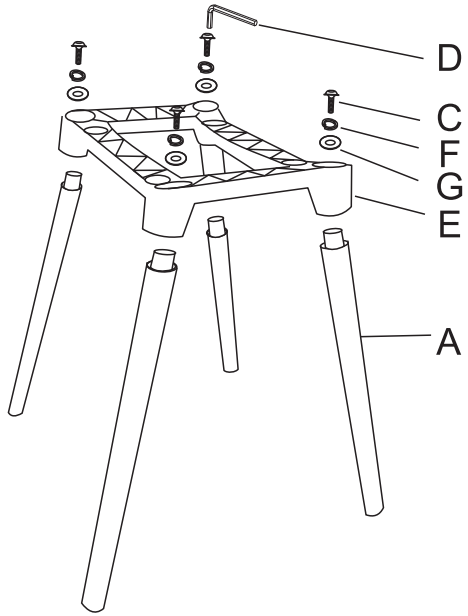

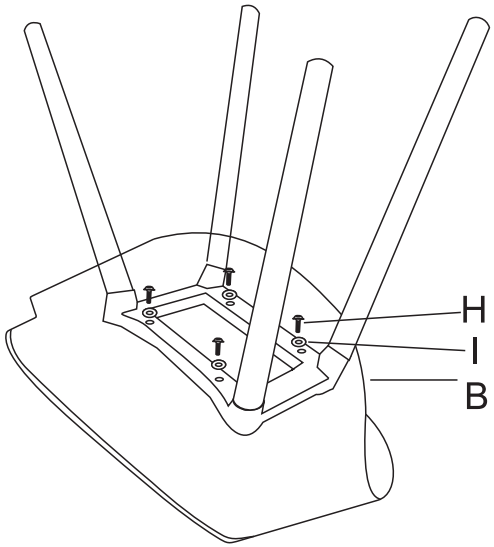

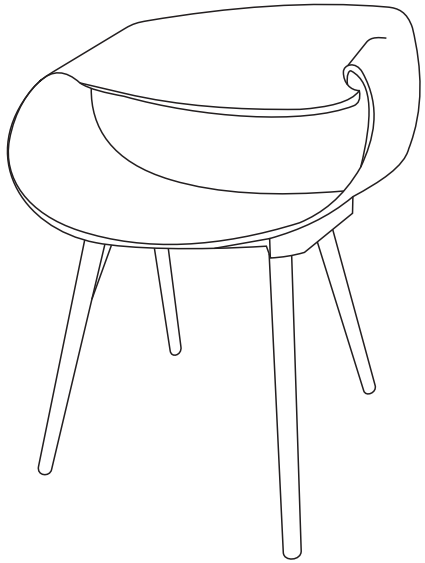

A		4	B		1	C	8X30MM	4	D	5#	1	E		1
F	M8	4	G	8X22X1.5MM	4	H	6X16MM	4	I	6X16X2MM	4			