Accessories(sitting sofa)

A 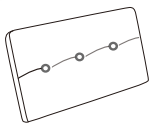 Back cushion (1)	B  Backrest (1)	L  Left armrest (1)	R 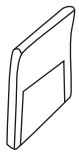 Right armrest (1)	C  Arm cushion (2)
D 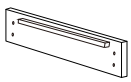 Front panel (1)	E 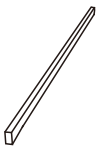 Metal bracket (1)	F  M6*20mm screw (40)	J  Wrench (1)	K  Sofa legs (4)
H  M6*45mm screw (4)	M  Golden latch (4)	N 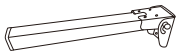 Backrest support leg(2)	W  Corner brace connector(2)	P  Roller wheel for pull-out bed (4)
Q  Gasket (8)	O  Backrest iron hinges(1)	I  Backrest iron hinges(1)	X 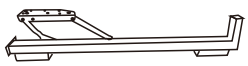 Metal bracket (1)	Y 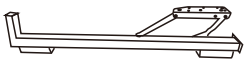 Metal bracket (1)
Z  Sliver latch (2)	V 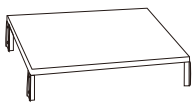 Sofa seat frame (1)	S 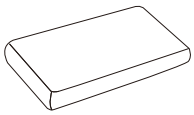 Seat cushion (1)	T  Pull-out bed cushion (1)	U 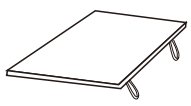 Pull-out bed seat board (1)

Pre-Installation Notice

1. All cushions are packed in compression bags. Cut open the compression bag before installation, take out all cushions and leave them to expand and recover for **72 hours**.
2. Remove the Velcro dust cover on the bottom of all cushions before placing them on the frame.

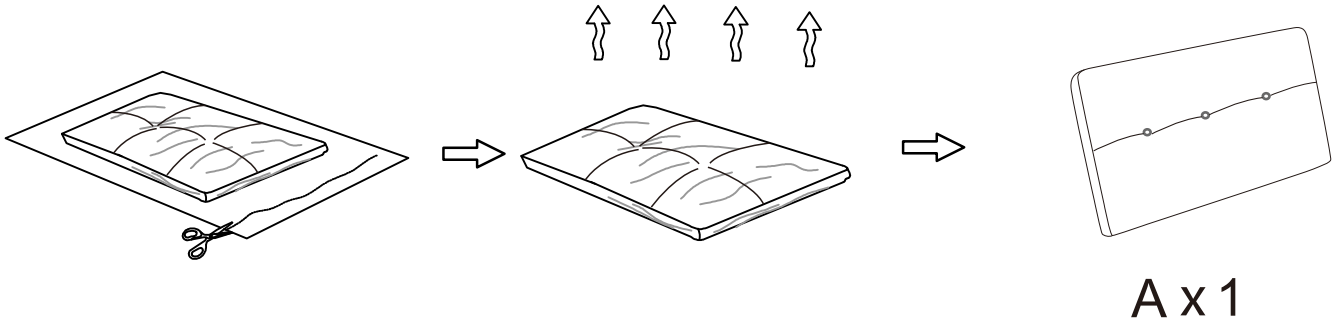

A x 1

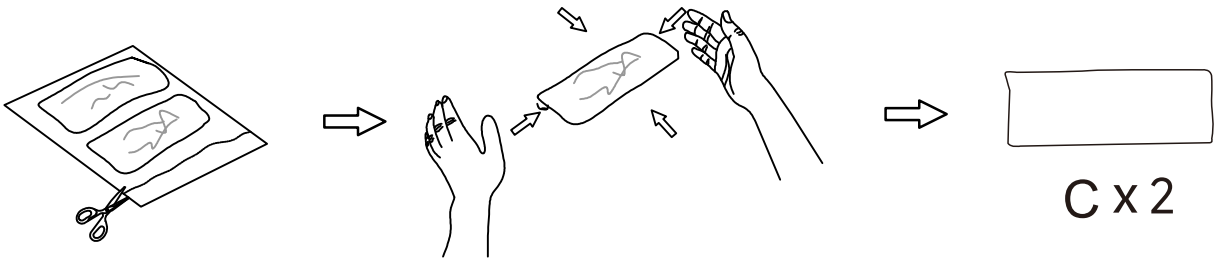

C x 2

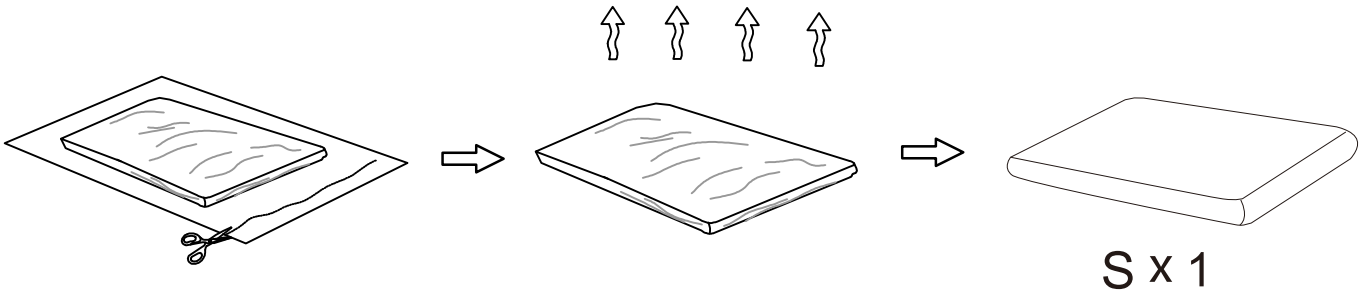

S x 1

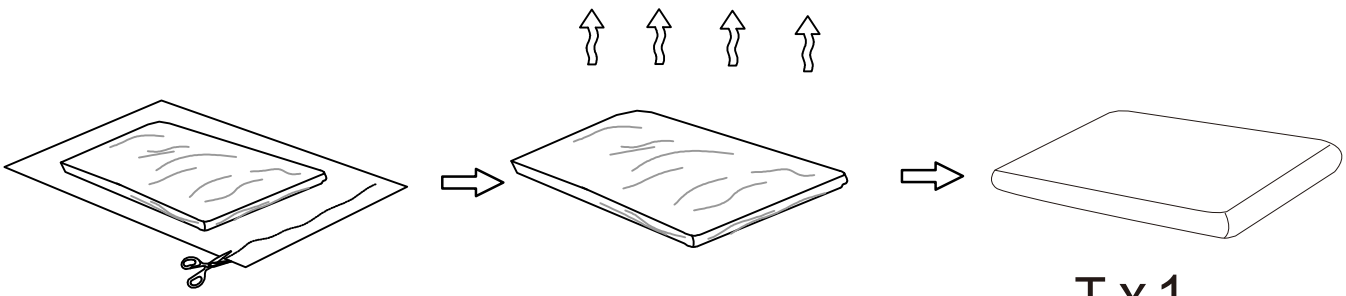

T x 1

STEP1: Pre-Assemble All Metal Frames & Hardware.

1. Use corner iron W and pin fittings to connect the left armrest (L) and right armrest (R).

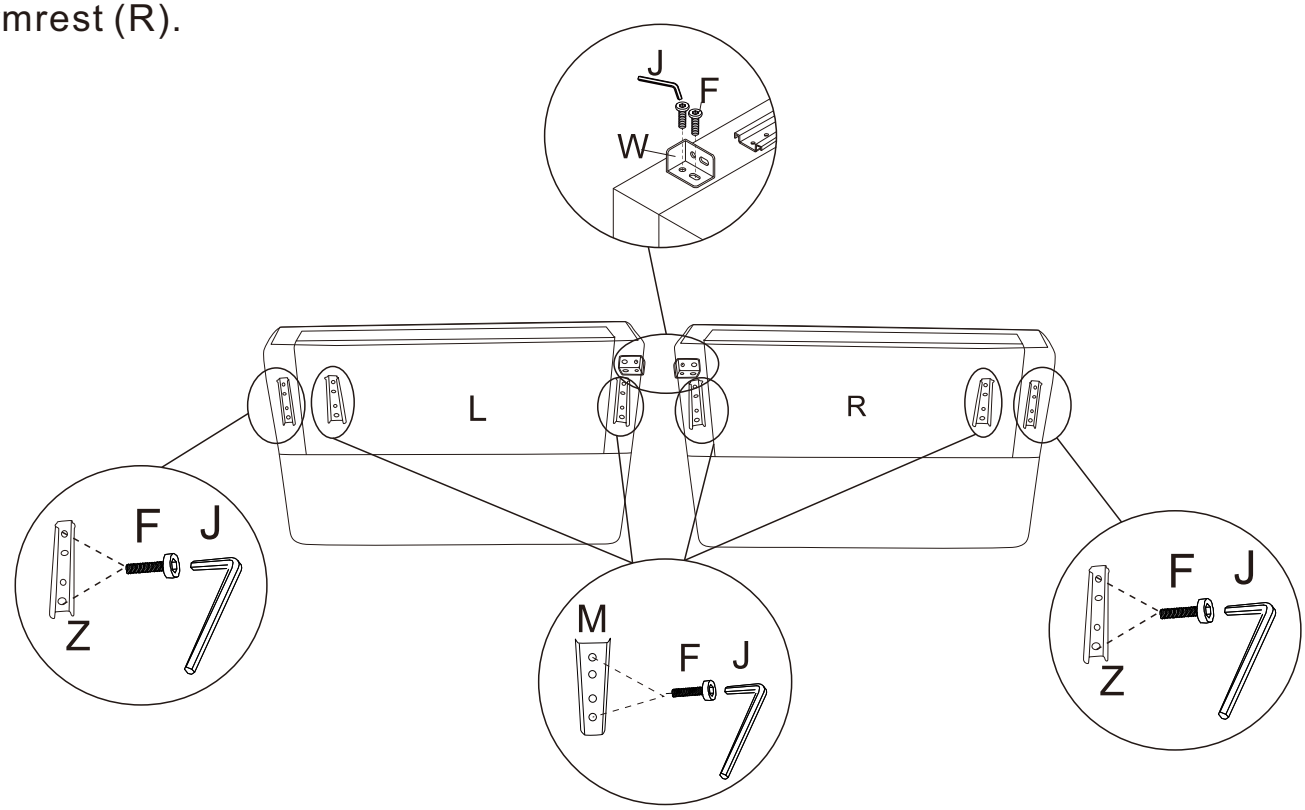

2. Mount backrest iron hinges I & O on the backrest frame with screw F and allen wrench J.

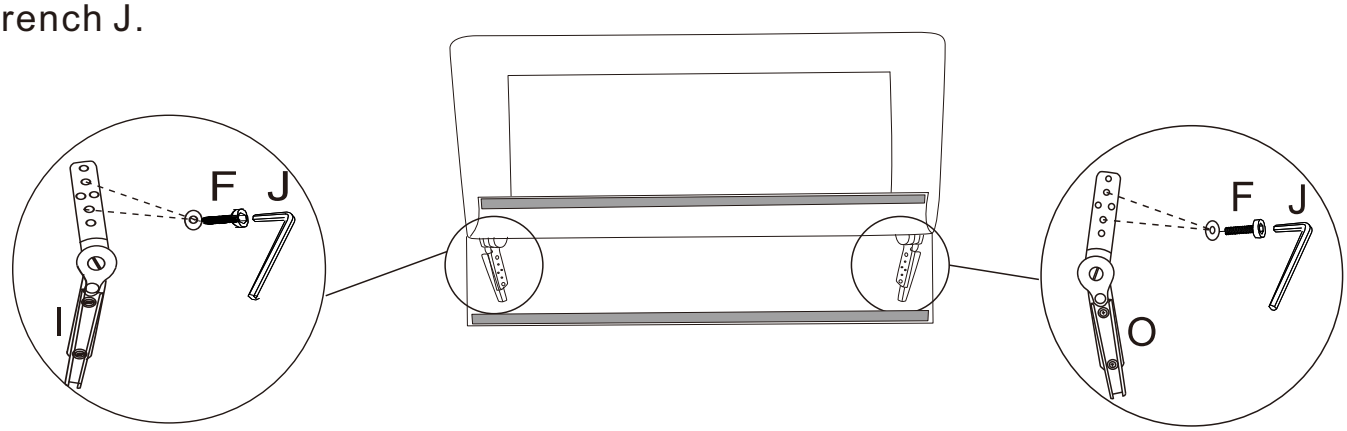

3. Use bracket E, screw F and allen wrench J to assemble pull-out bed iron frame X and side bracket Y.

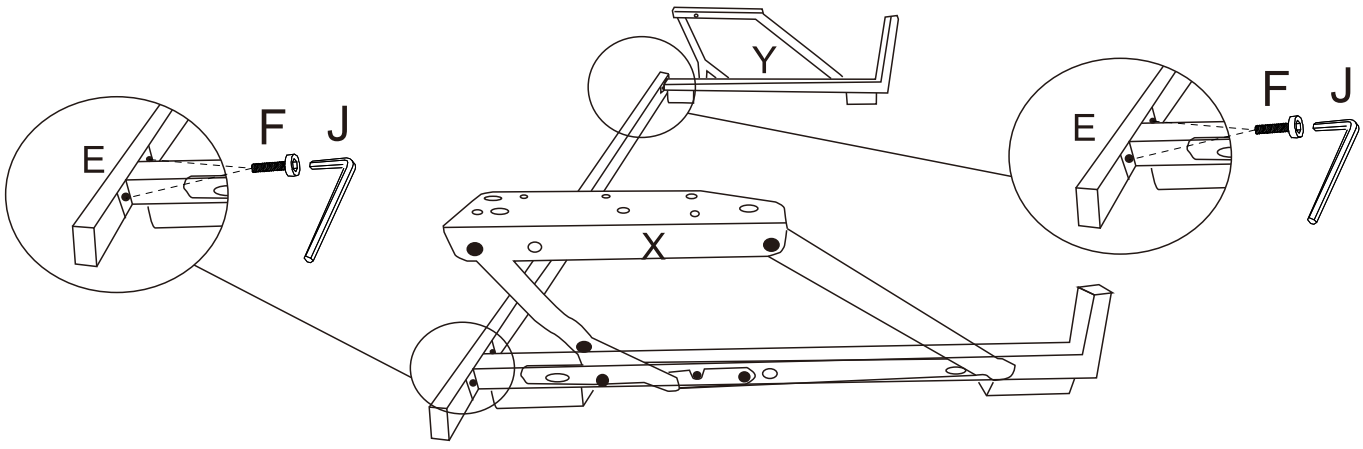

STEP2: Install Sofa Legs (K)

Screw 4 sofa legs K onto the bottom of left armrest L and right armrest R respectively.

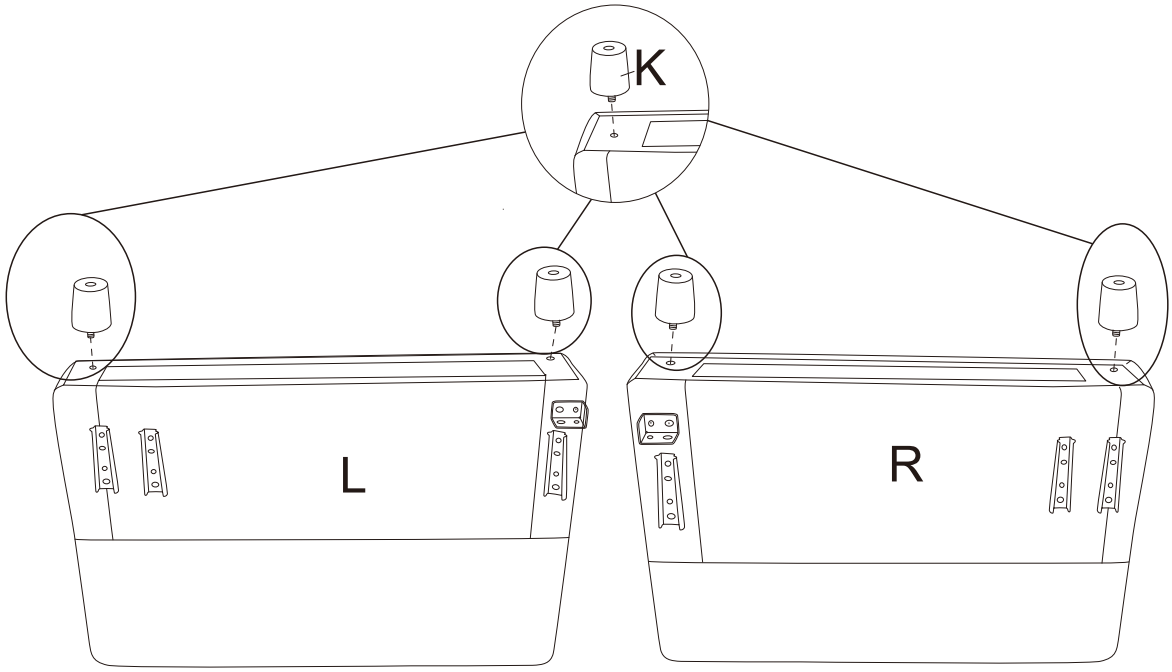

STEP3: Mount Backrest to Armrest Hardware

Align the mounting slots on both sides of the backrest frame with the metal hardware on left armrest L and right armrest R, then slide the backrest down to lock into place.

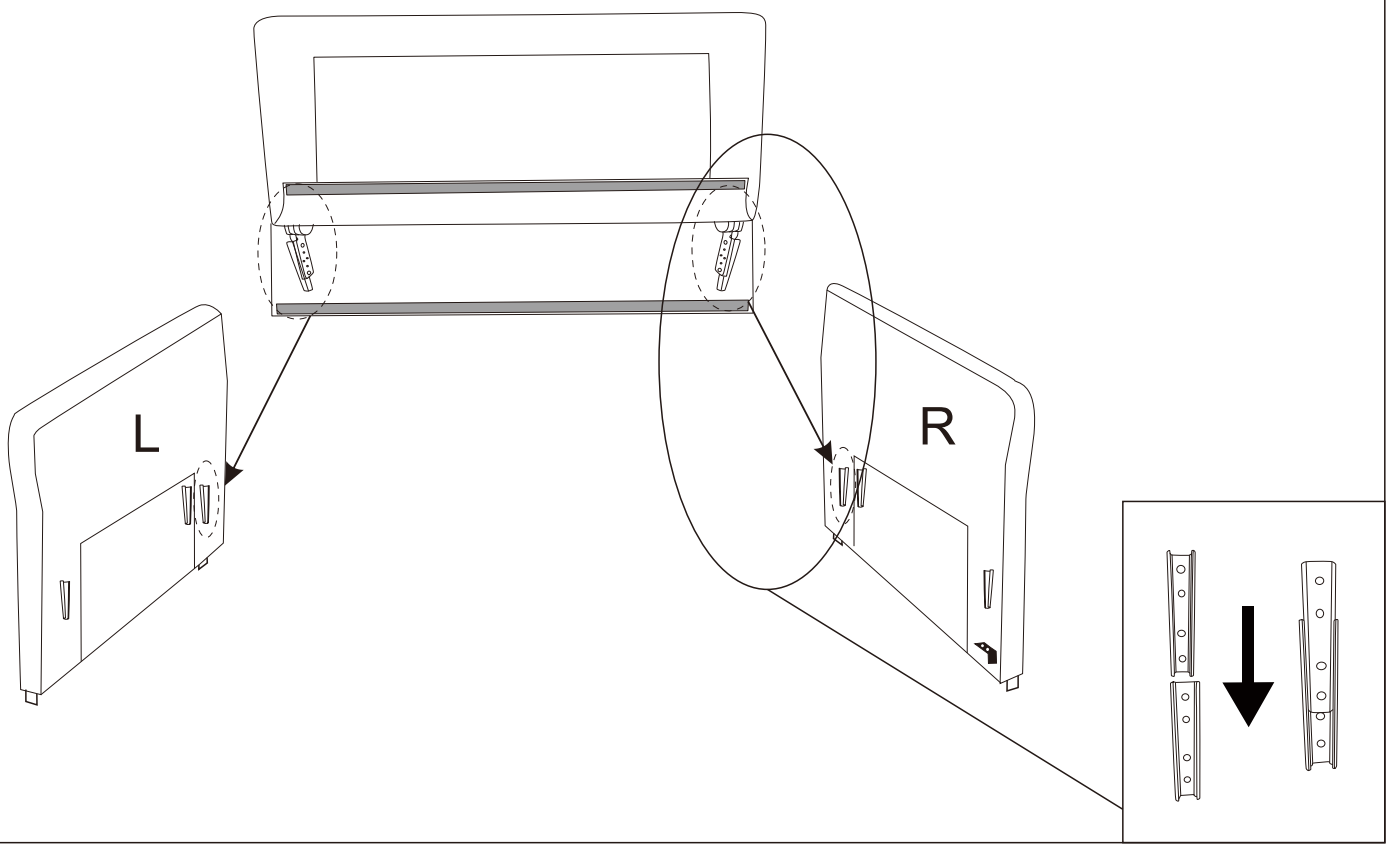

STEP4: Install Sofa Seat Frame (V)

Insert both ends of sofa seat frame V into the reserved metal hardware slots of left armrest L and right armrest R, and snap it firmly.

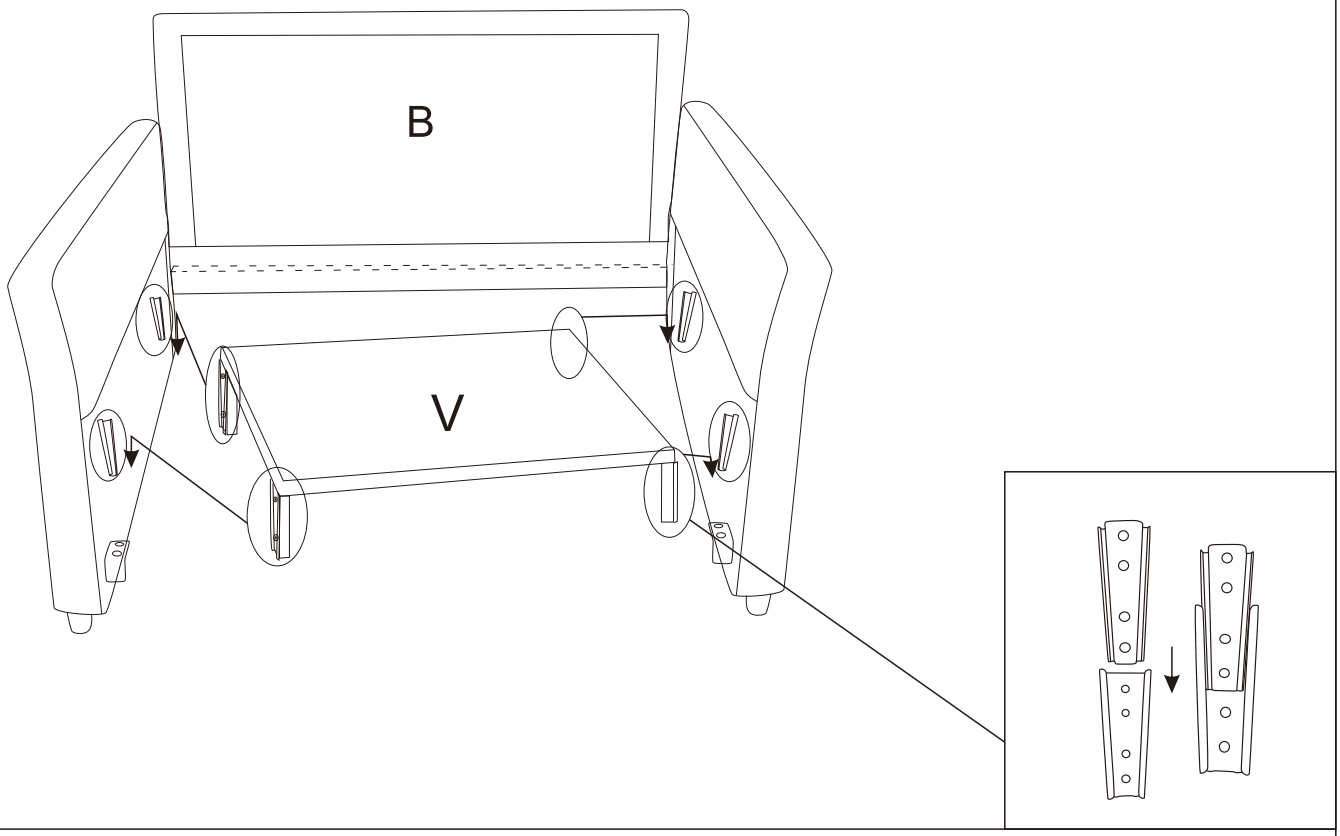

STEP5: Stick Backrest Velcro Strip

Peel off the protective dust strip of the Velcro tape on the bottom edge of the backrest, then press and attach the Velcro onto the upper panel of sofa seat frame V.

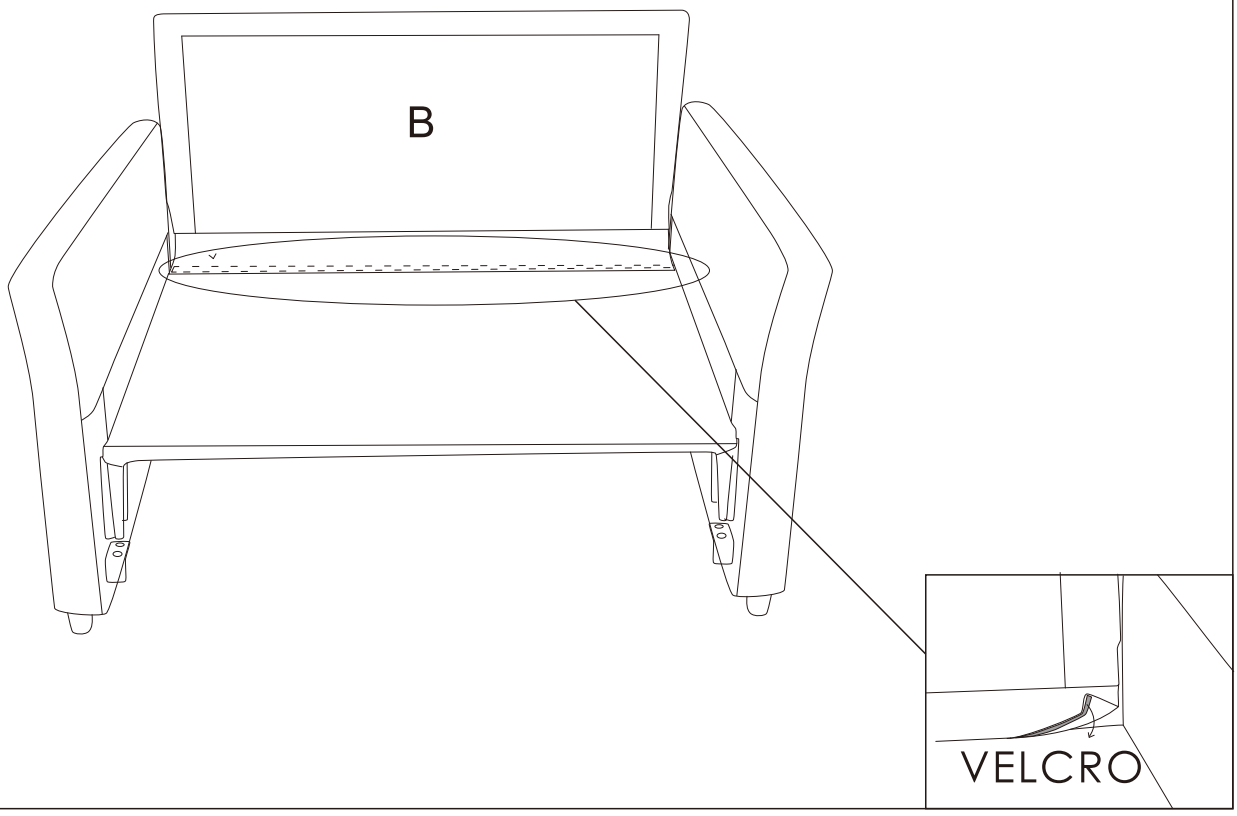

STEP6: Place Main Seat Cushion (T)

Remove the Velcro dust cover on the bottom of cushion T, then lay cushion T flat on top of seat frame V and fix via Velcro.

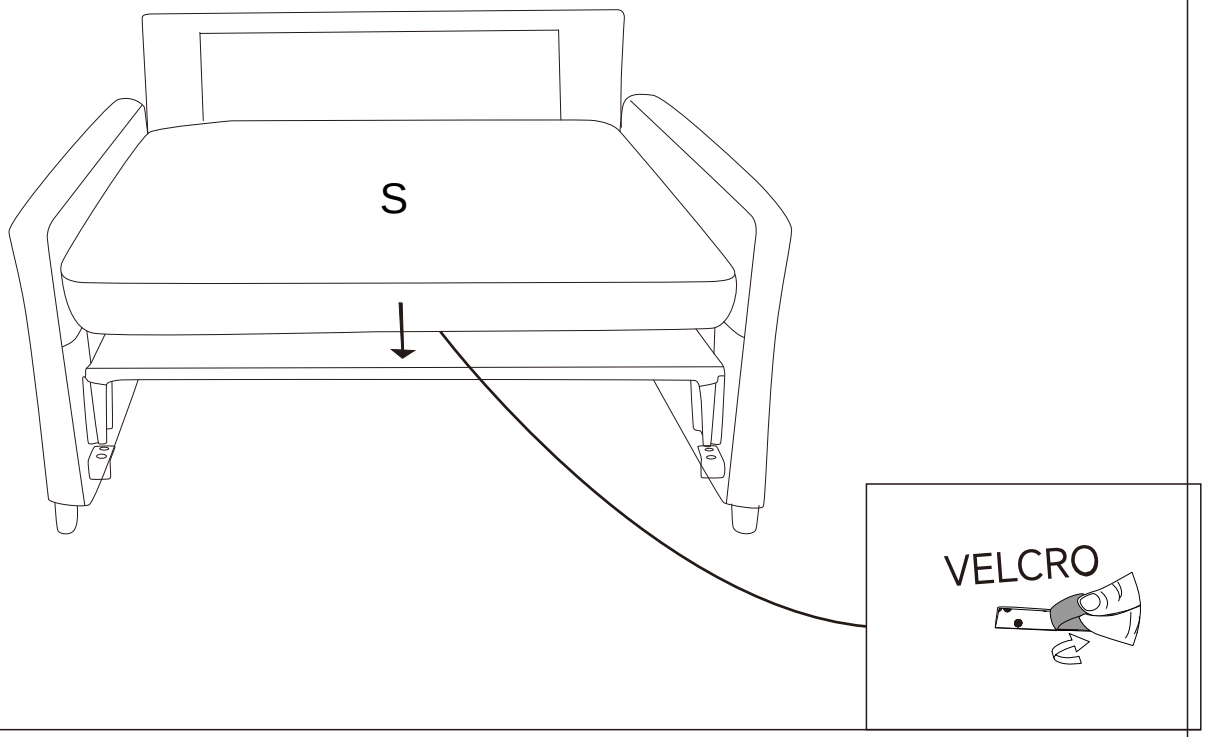

STEP7: Place Main Back Cushion (A)

Peel off the Velcro protective strip on the bottom of back cushion A, align it with the Velcro on the backrest frame, then place cushion A onto the backrest.

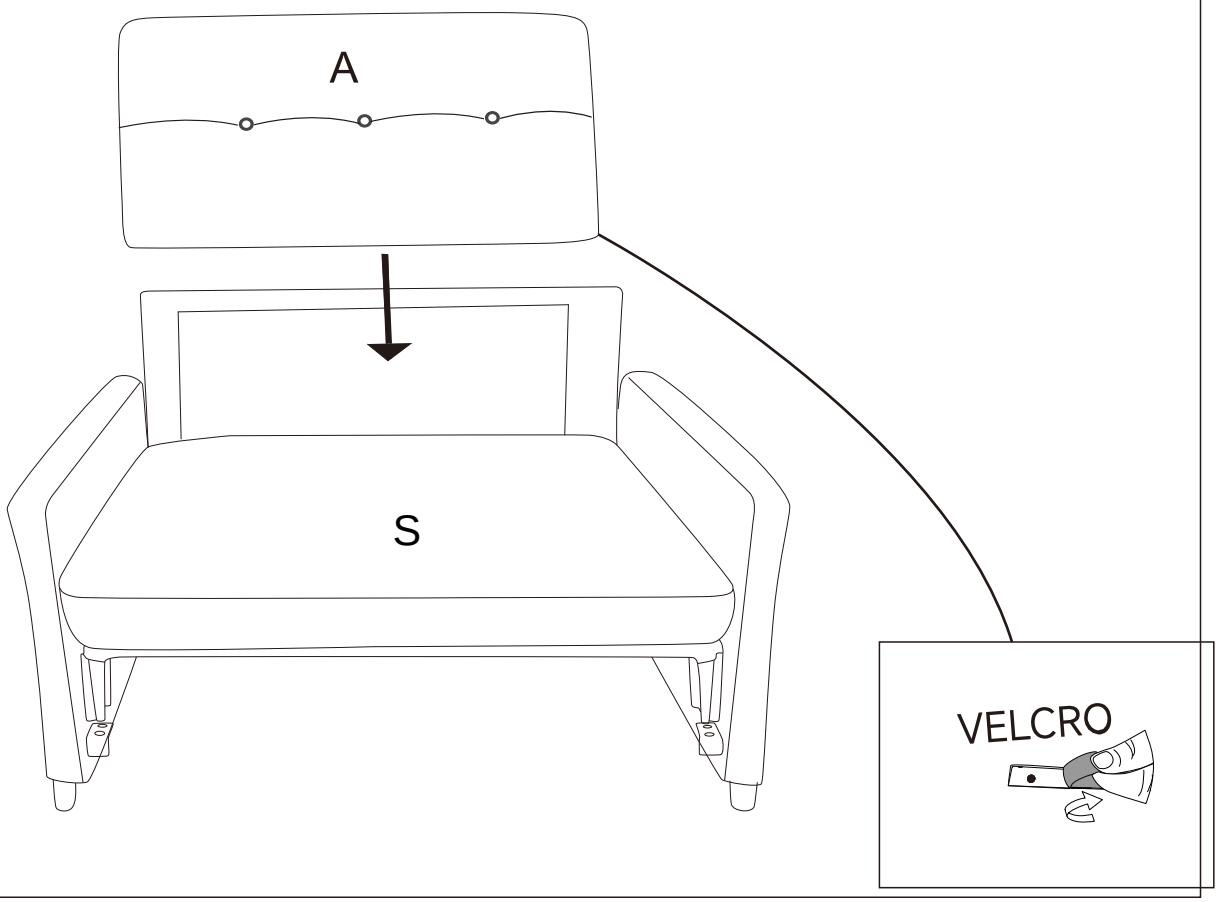

STEP8: Assemble Pull-out Bed Frame X & Bed Board U

Flip pull-out bed board U upside down (bottom surface facing up). Use screw F and allen wrench J to fix brackets Y on both sides of iron frame X to the bottom of bed board U.

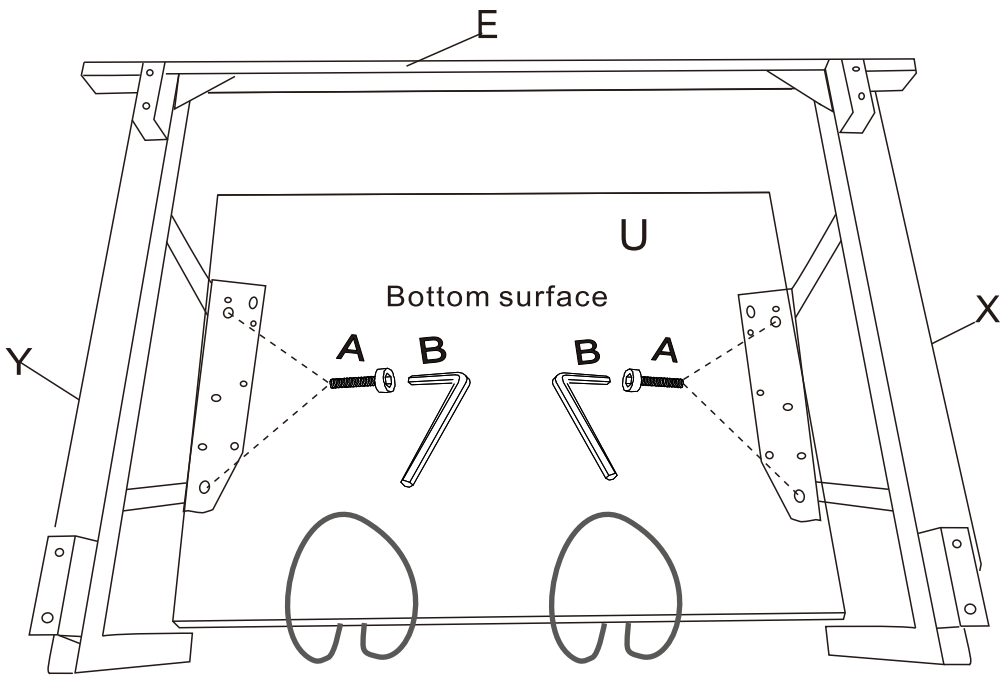

STEP9: Install Pull-out Bed Front Panel D

Align front panel D with the top edge of pull-out bed frame X, fasten the panel with fasteners Q, screw F and allen wrench J.

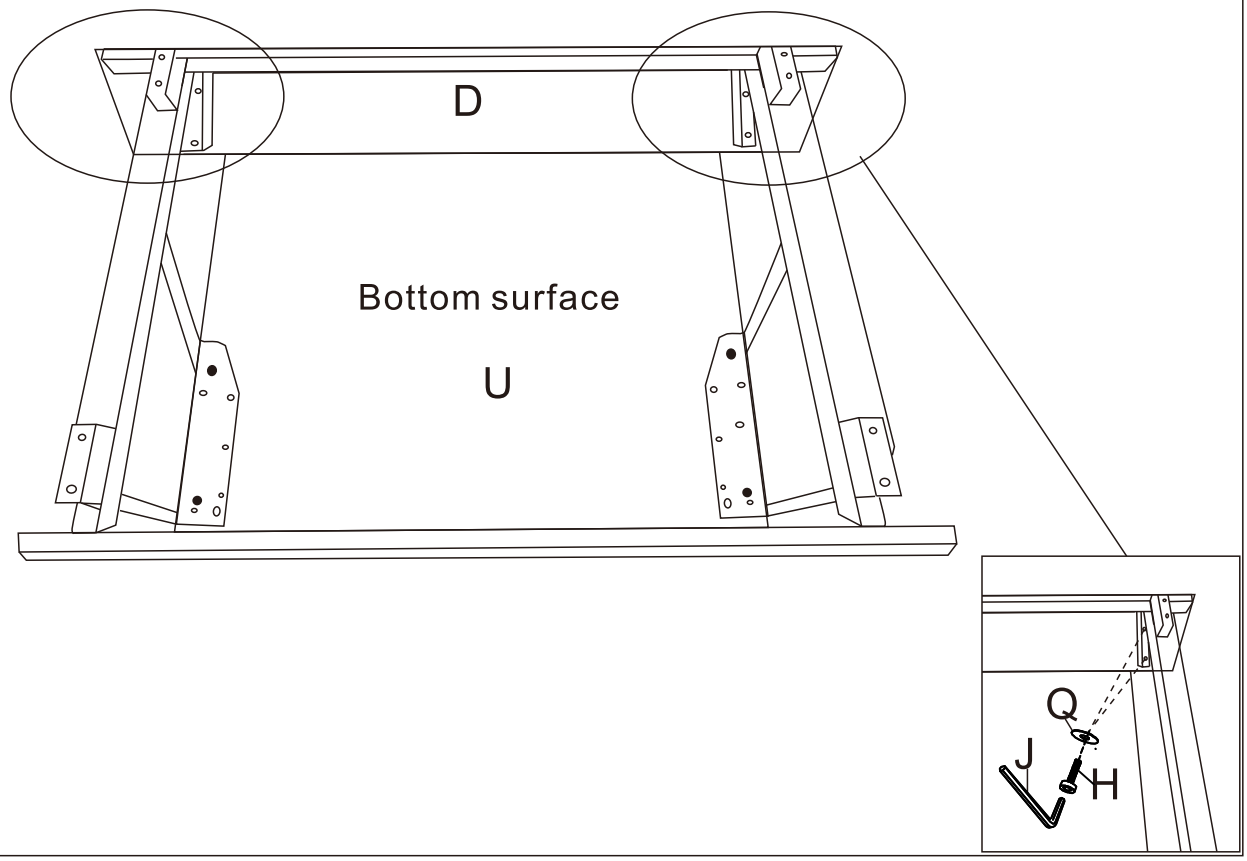

STEP10: Mount Roller Wheels (P)

Fix 4 roller wheels P to the four bottom corners of pull-out bed frame X with screw F and allen wrench J.

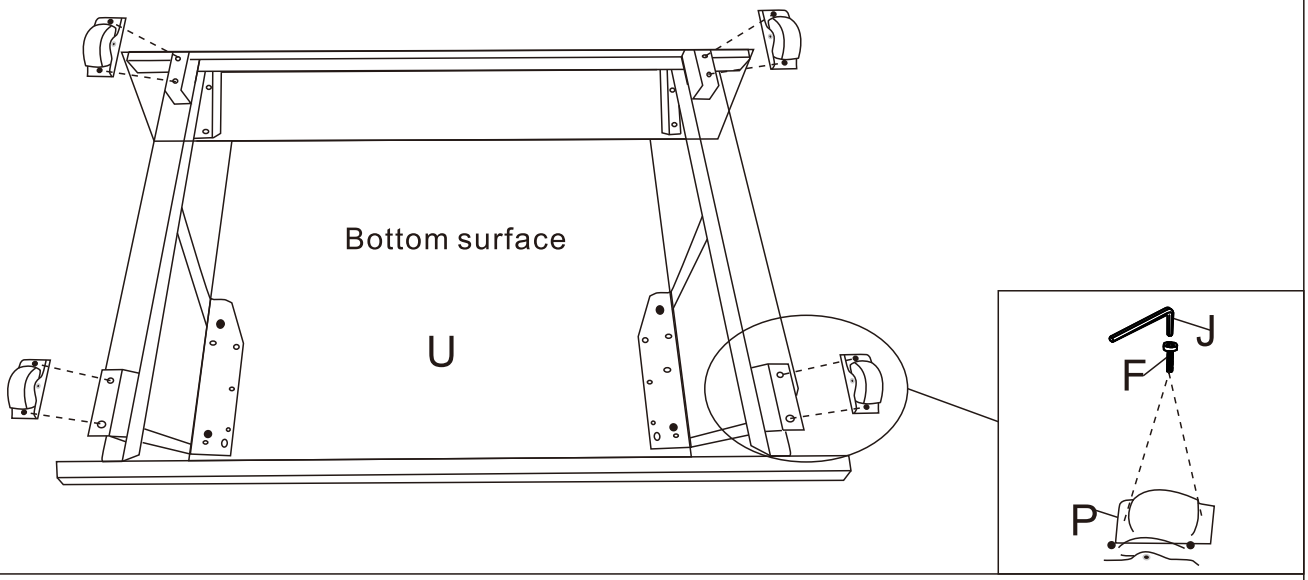

STEP11: Insert Pull-out Bed Unit Under Sofa

Lift the whole pull-out bed assembly U, slide it into the bottom space of sofa seat frame V, and snap the bed frame onto the reserved metal hardware under the sofa.

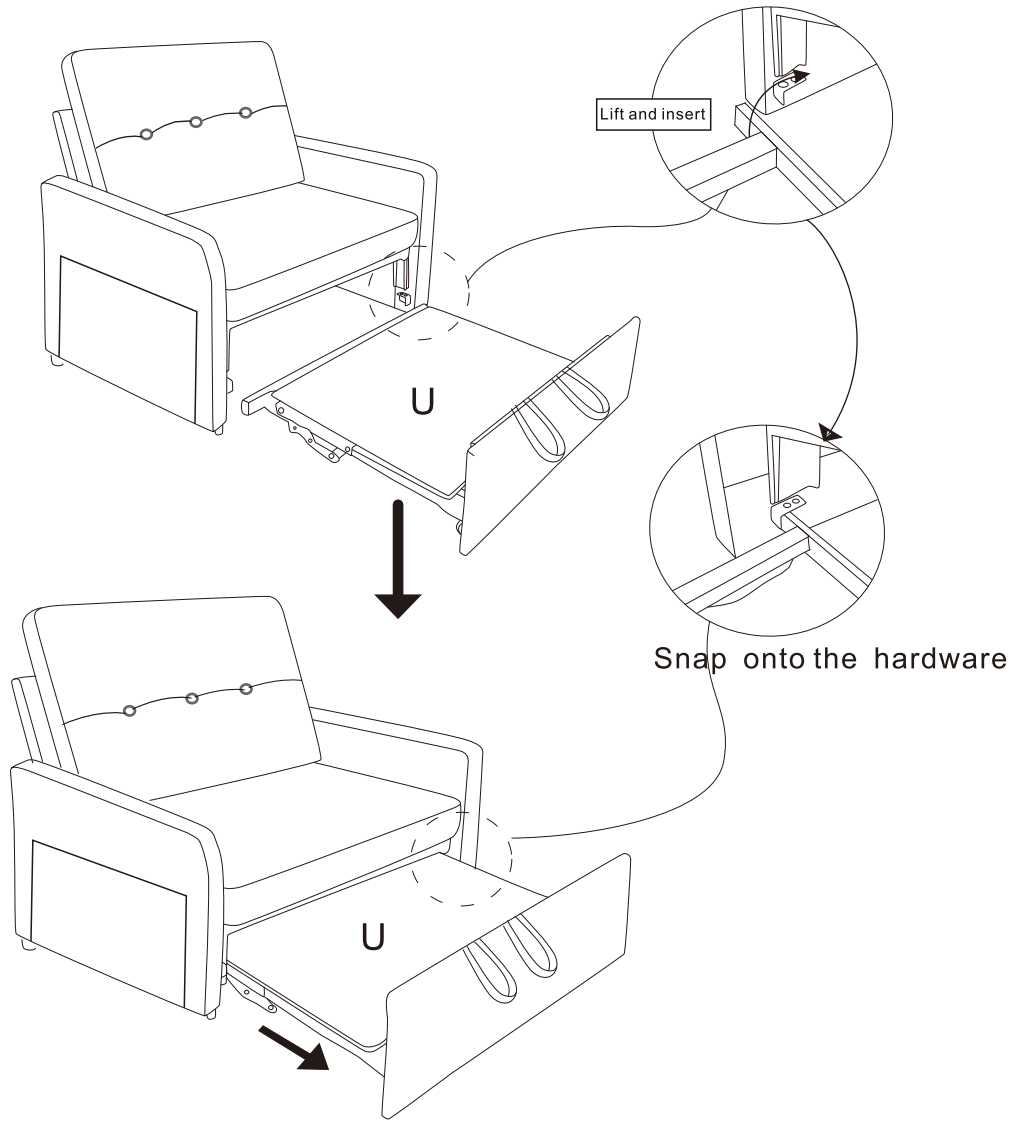

STEP12: Lay Pull-out Bed Cushion S

Remove the Velcro dust strip on the bottom of cushion S, then place cushion S on the surface of pull-out bed board U and secure with Velcro.

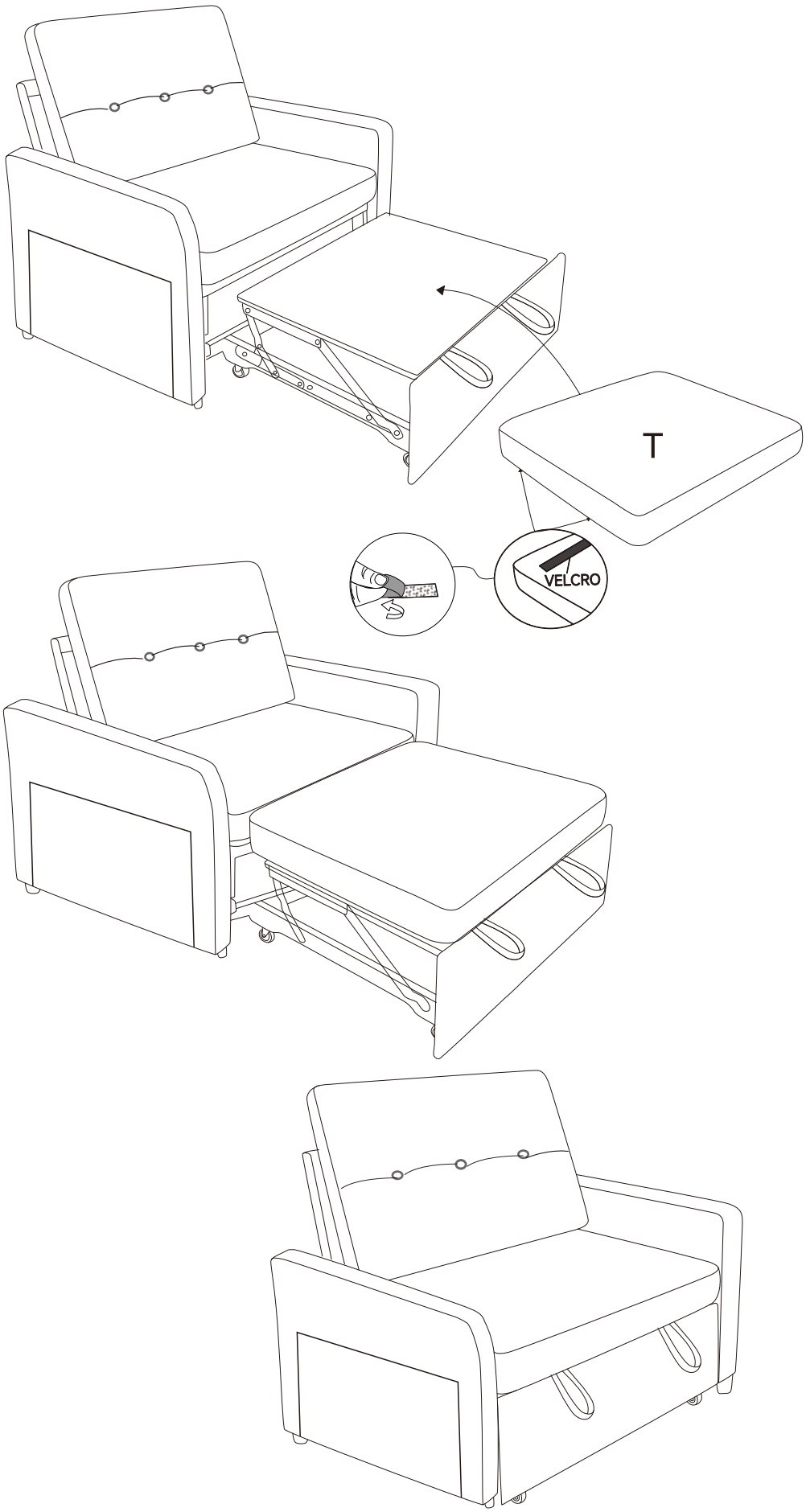

STEP13: Install Backrest Support Legs (N)

1.Mount two support legs N on the bottom rear of the backrest frame.

2. Operation guide: Flip the lock catch on support leg N outward, then lower the leg smoothly to support the reclined backrest.

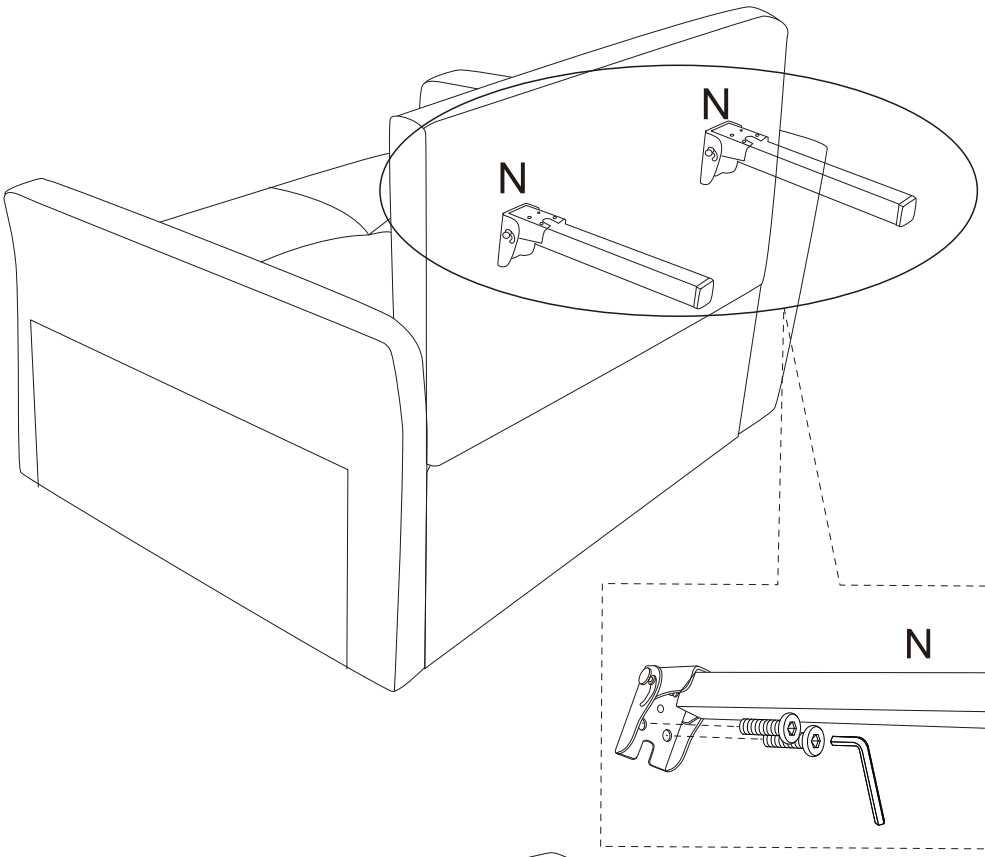

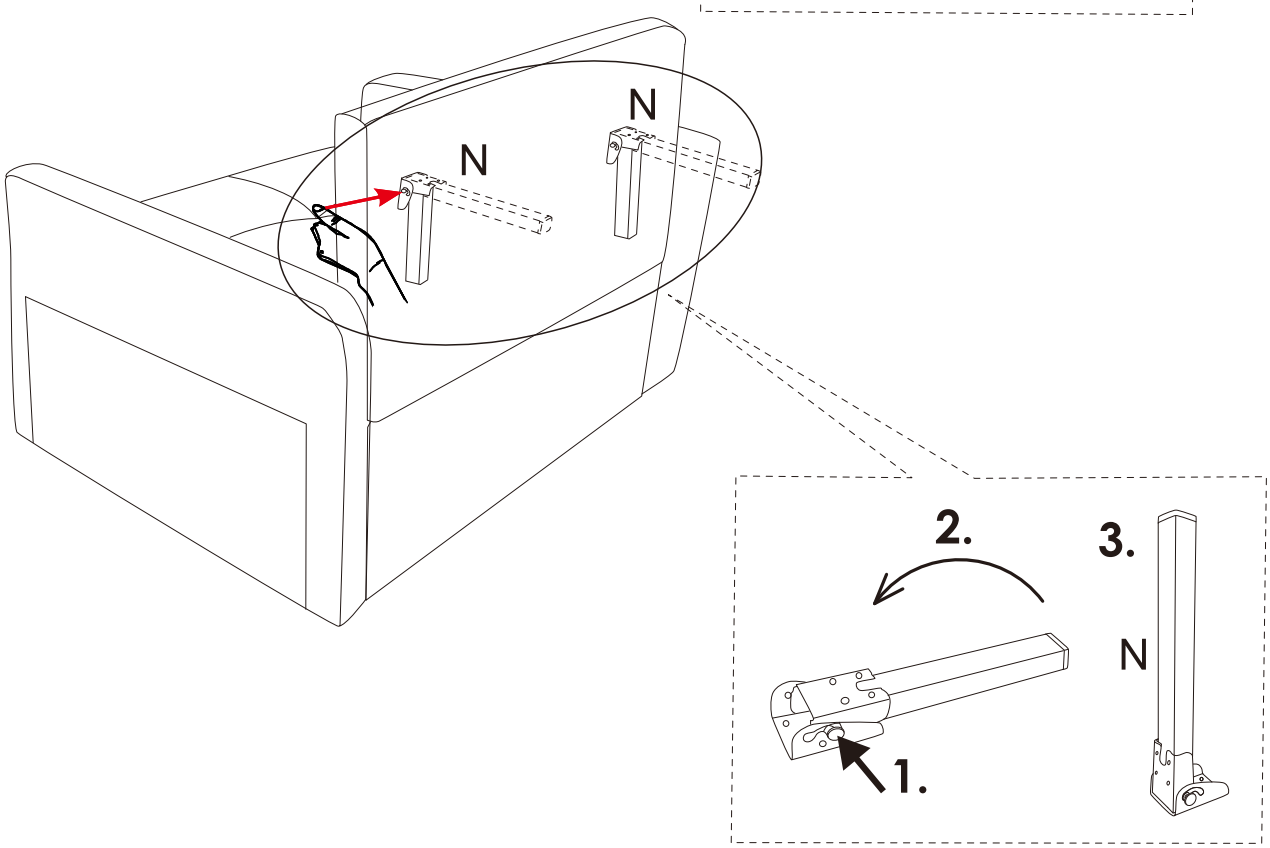

STEP14: Adjust Backrest & Fix Fabric Cover

1.The backrest supports 5 adjustable reclining angles. Push the backrest fully forward against seat cushion T to reset the angle position.

2. Peel off the Velcro dust strip on the back fabric cover, then fasten the fabric cover with Velcro.

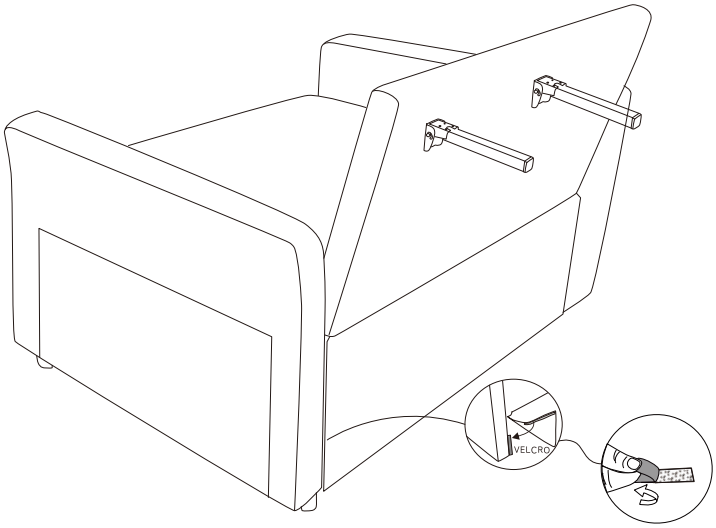

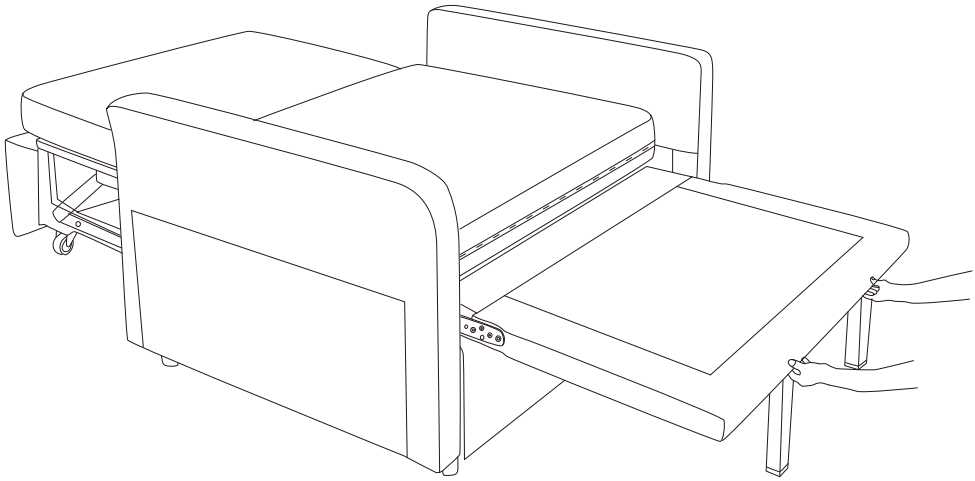

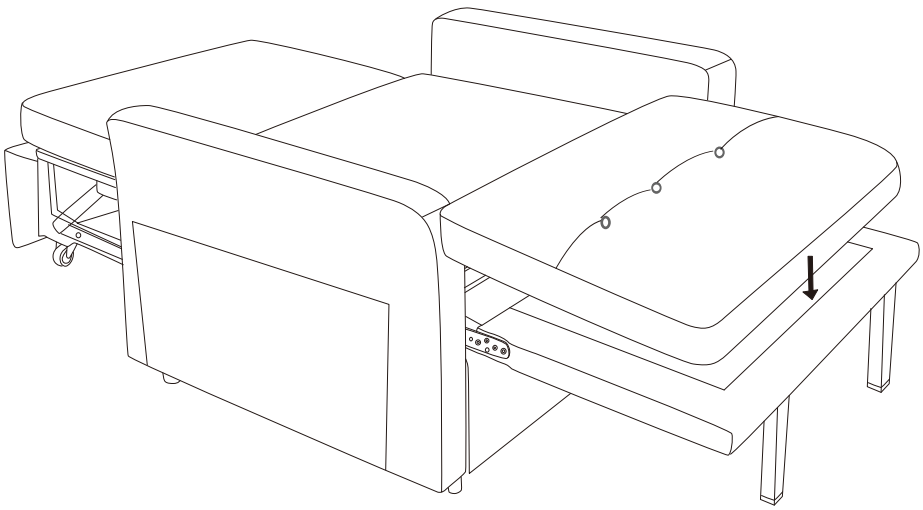

STEP15: Final Arrangement & Complete Installation

Place two armrest cushions C on the left and right armrests respectively. The whole sofa bed installation is finished.

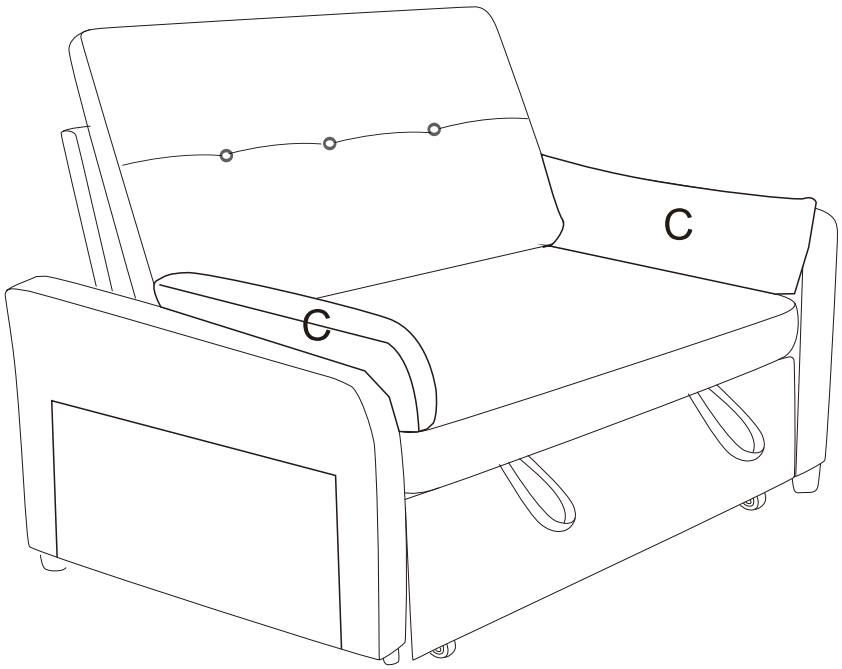

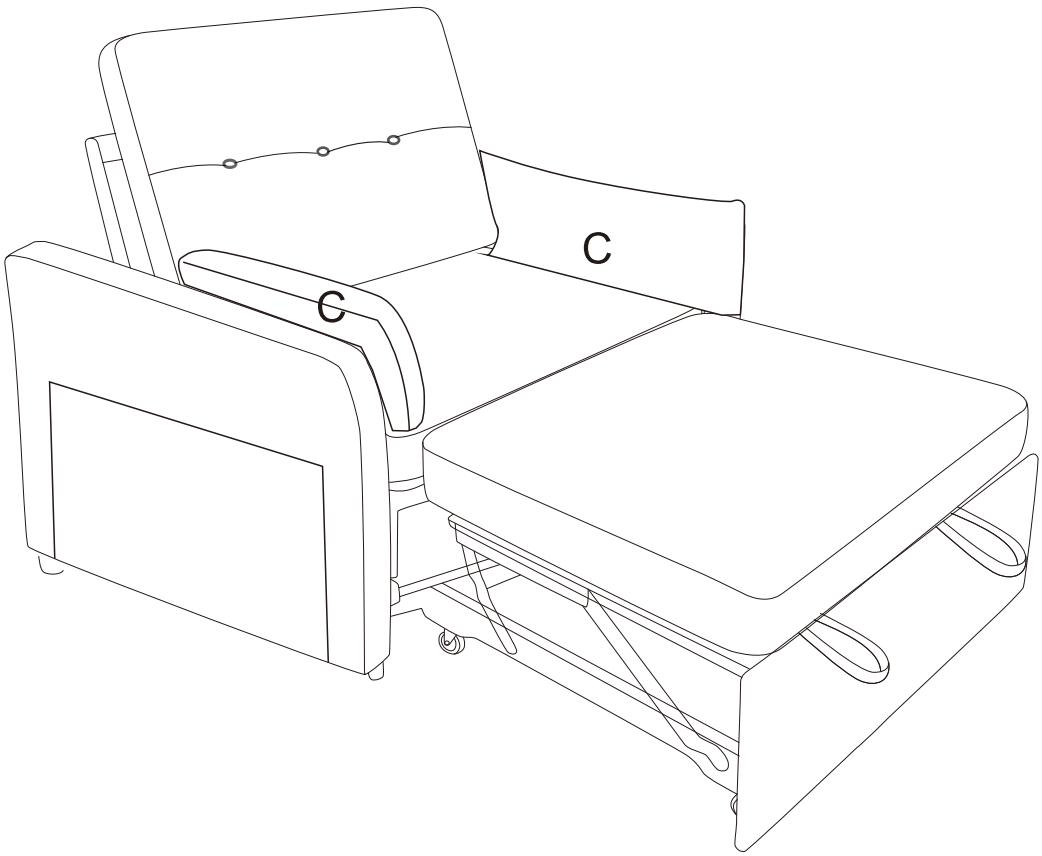

Maintenance Tips

1.Compressed cushions will have temporary wrinkles after unpacking. You can iron the fabric or leave it to stand for 72 hours to restore its original fluffy shape.

2.For daily cleaning, hand wash the fabric cushions is recommended.