Assembly Instructions

CHAIR

CAUTION: You must read this before you proceed

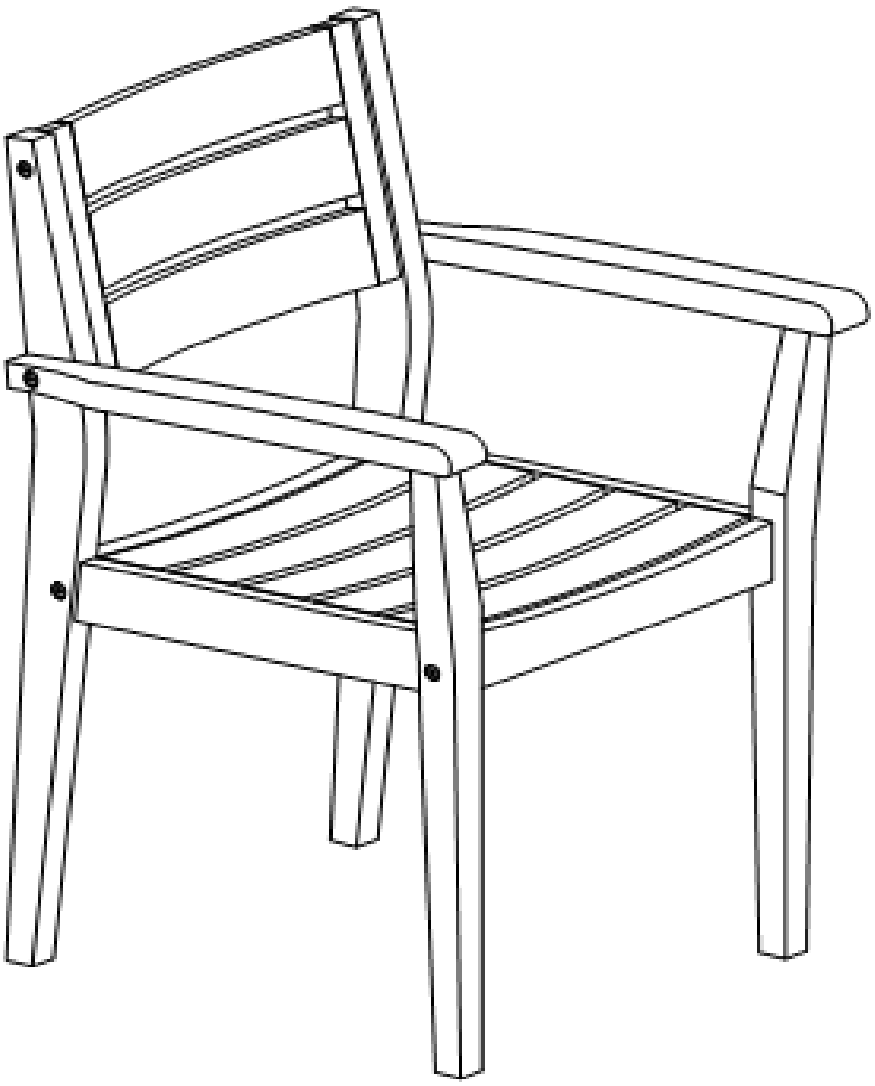

CAUTION : This Chair is NOT a TOY.
Keep your child / children at bay in the process of assembly.
For turning the Chair and to prevent damage to the Chair, 02 persons may be needed to execute this action

Parts List

No.	Picture	Description	Qty
A	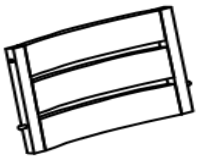	Backrest Panel	1
B1		Right Leg Frame	1
B2		Left Leg Frame	1
C		Seat Panel	1
D		Cross bar	2

Hardware

No.	Picture	Description	Qty
①		Allen Wrench	1
②		Short Screw (M6*35mm)	5
③		Medium Screw (M6*60mm)	3
④		Long Screw (M6*80mm)	5

Assembly Preparation

Before Beginning Assembly:

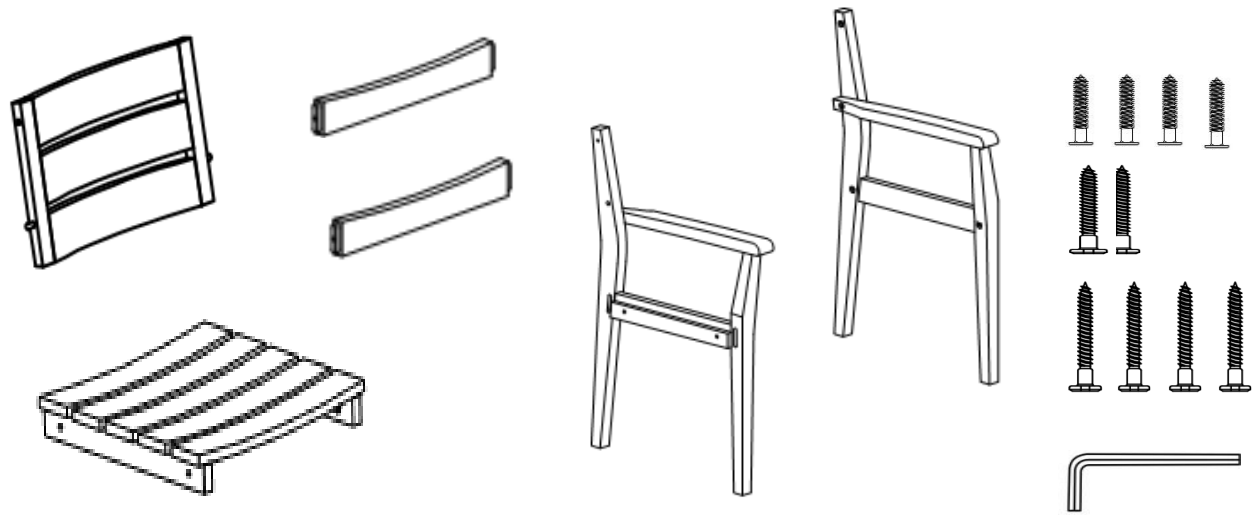

- Read instructions, cover to cover-
- Have 2 adults on hand for assembly-
- Do not assemble on flooring or carpet-
- Assemble on a clean non-marring surface (packing foam)-
- Save all packaging until finished-

Assembly Steps

OVERVIEW

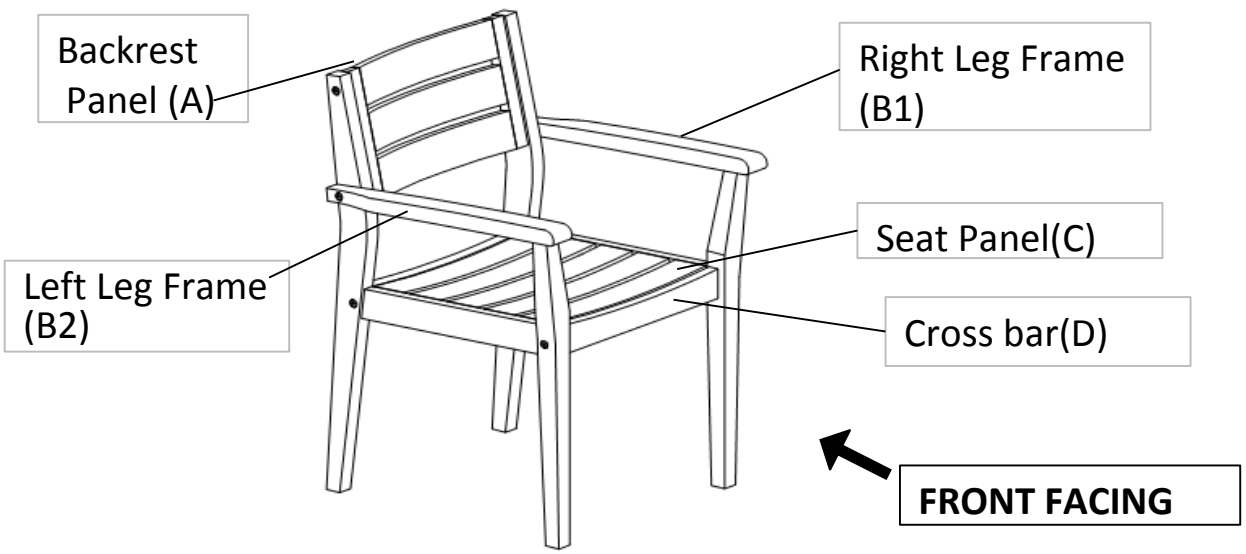

This Chair has multiple parts and may require up to some 30 minutes to assemble. To give you an overview of the Chair, the above picture to assemble to help you put the various parts into perspective. Please read through the instructions here below to familiarise the parts and steps before assembly.

Step 1

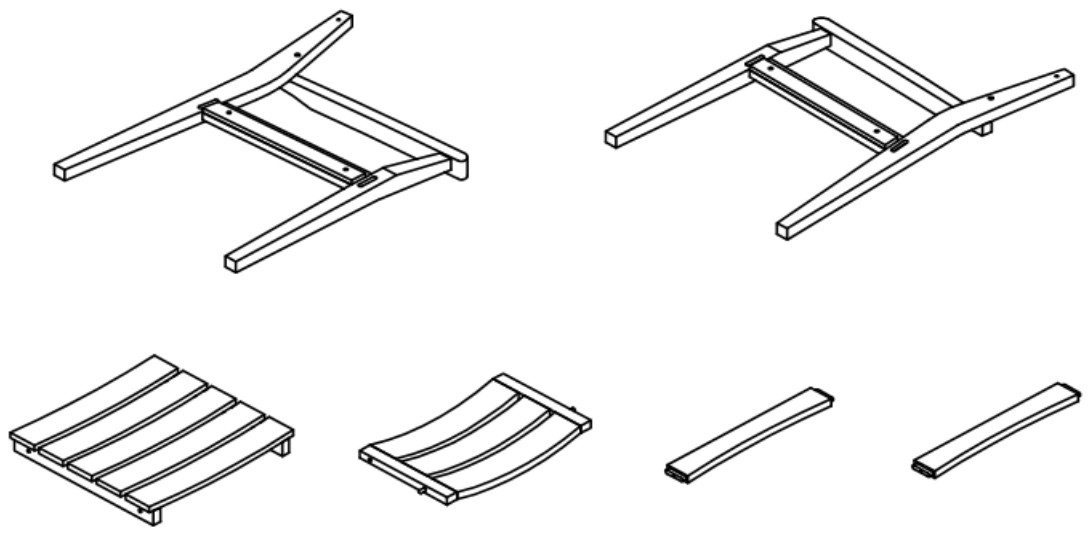

Unpack and place all parts on a clean, non-marring surface.

Step 2

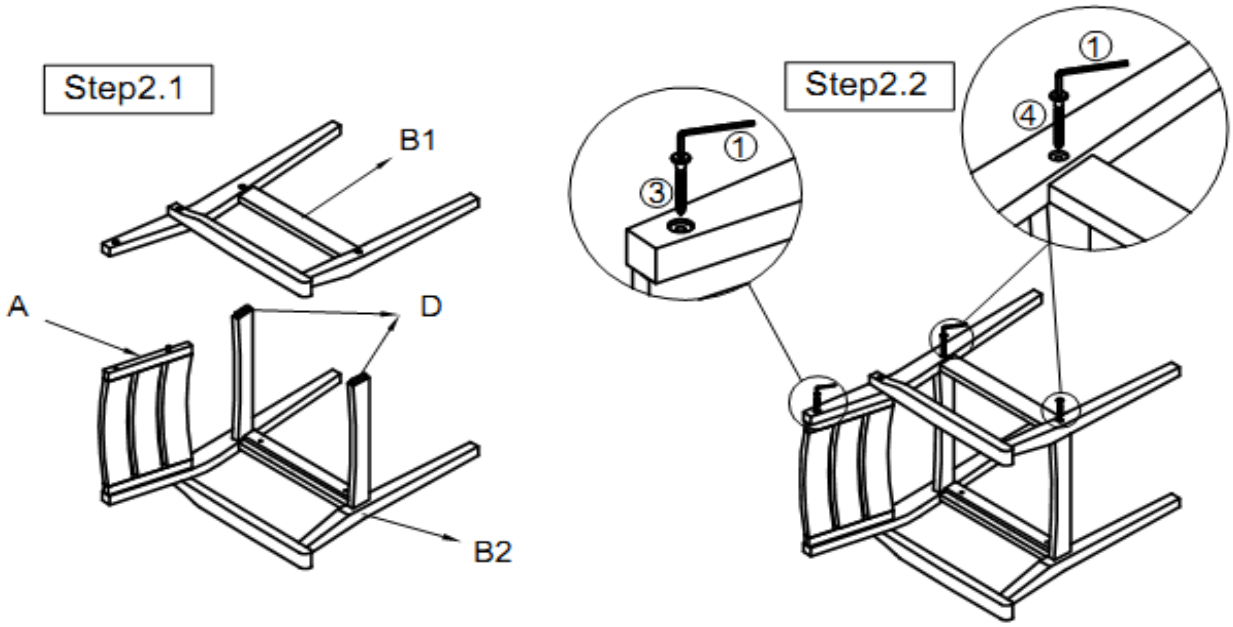

2.1) Position Backrest Panel (A) and 2 Cross Bar (D) to Left Leg Panel (B2) as shown in picture above

2.2) Attach Right Leg Panel (B1) to 2 Cross Bars (D) by using 2 Screw(④)+Allen Wrench (①)

Then, secure Right Leg Panel (B1) to Backrest Panel (A) by using Screw (③)+Allen Wrench (①)

Do not fully tighten the Screws.

Step 3

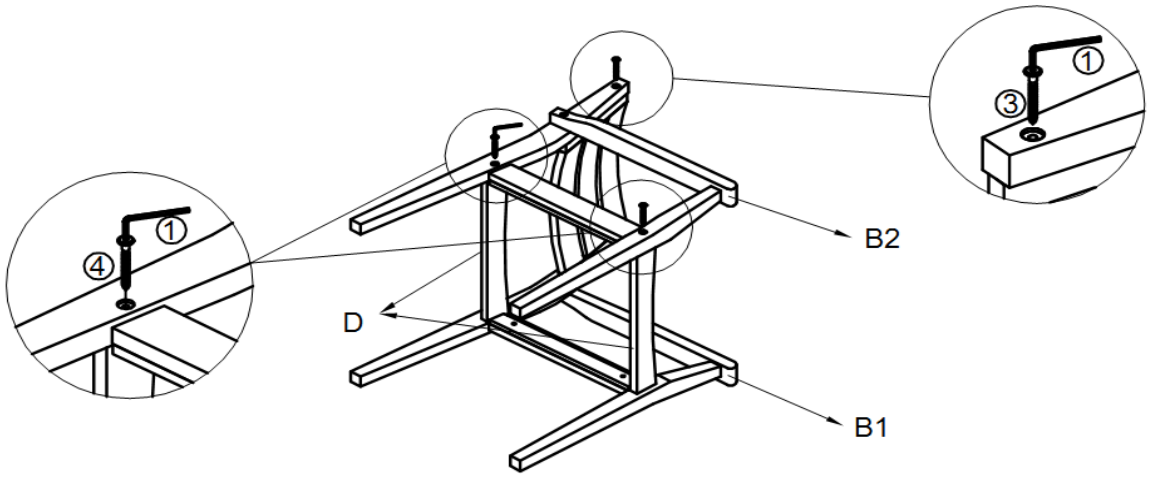

With assistance from your adult partners, turn the Chair into the other side.
Repeat the same process of step 2.2 to secure Left Leg Panel (B2) with Backrest Panel (A) and 2 Cross Bars (D)
Do not fully tighten the Screws.

Step 4

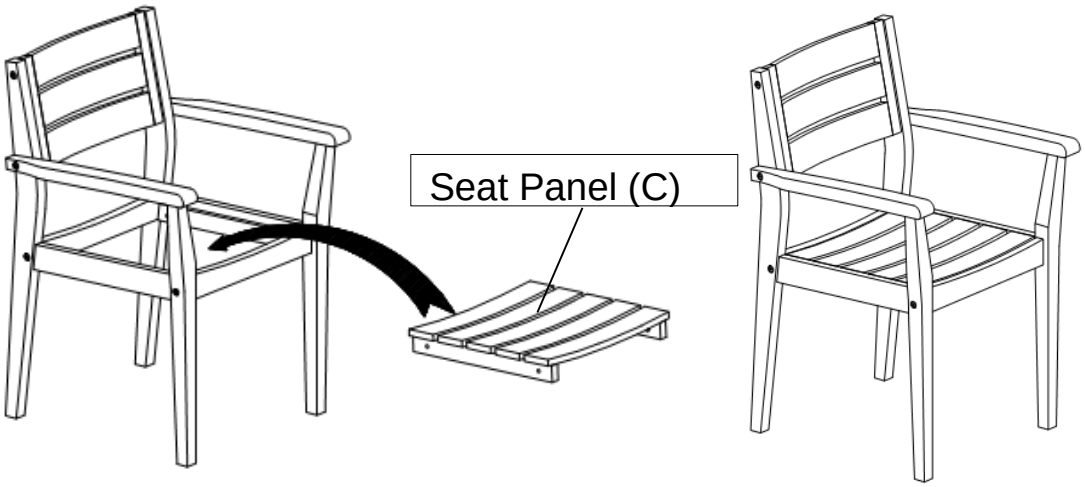

Turn the chair in right side up
Place Seat Panel (C) onto the chair as shown above.

Step 5

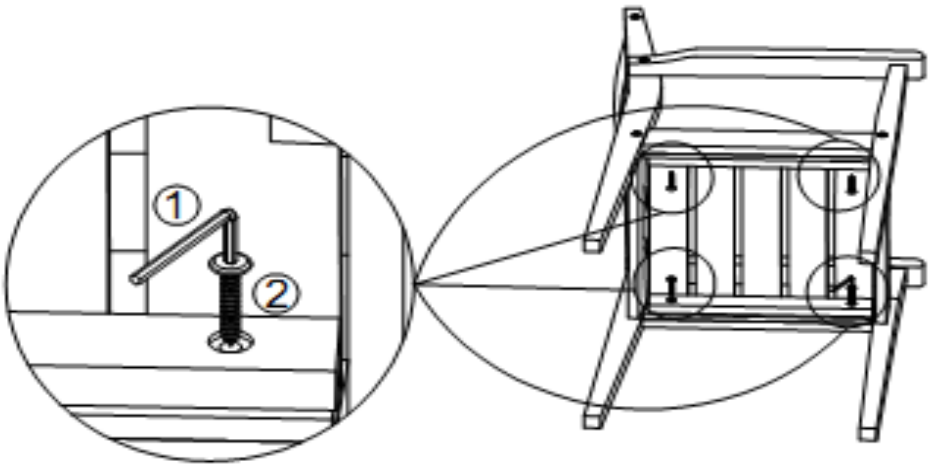

Lay down the Chair one side and Secure Seat Panel (C) with Left Panel (B2) and Right Panel (B1) by using 4 Screws (②) + Allen Wrench (①)
Do not fully tighten the Screws.

Step 6

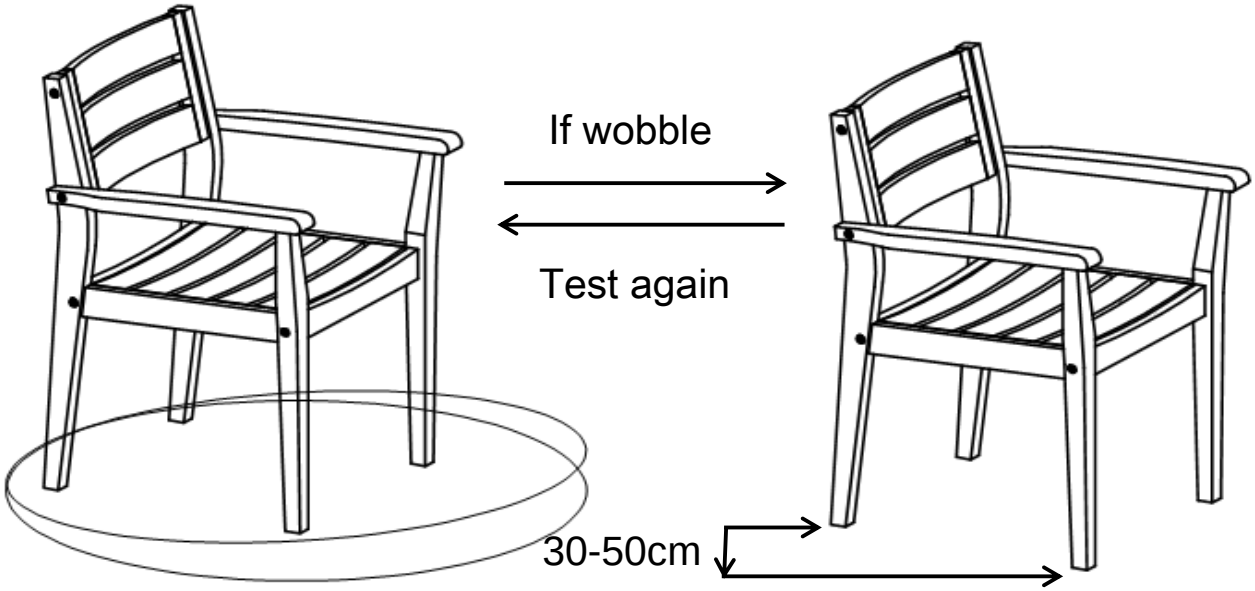

Place the Chair right side up on a LEVEL SURFACE to see if it wobbles.
If it wobbles, lift the Chair 30cm to 50cm high from the ground.
Keep your feet and toes well away from the drop zone.

Drop the Chair freely and vertically with all four legs, hitting the ground at the same time.
This Drop Test will help to ensure that all the Bolts, Screws and gaps reach full alignment status.
Test again for evenness on a LEVEL SURFACE.
If no wobbles are found, proceed to tighten all the Bolts, Screws.

When tightening the Bolts, Screws, tighten sequentially.
Do not tighten any Bolt, Screws fully and then move towards the next one.
This could cause the frame to warp.
If there are still wobbles, loosen the Bolts, Screws and execute the same drop tests.
If the Chair is not stable it could lead to damage to the product.

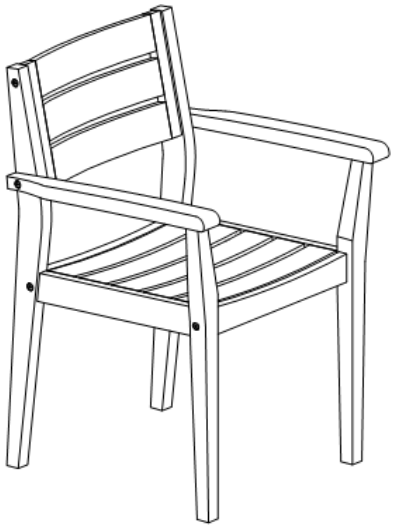

Inspect the Chair and make sure all parts are connected.
Your Chair is ready for use.
This Chair can only be used on a flat, level surface.

Care & Maintenance

- Do not put hot items directly on furniture surface.
- Do not clean furniture with harsh cleansers or polish.
- To obtain the longest lifespan of your outdoor prodcts, minimizing exposure to direct sunlight is recommended.
- Children should not climb or jump on the furniture.
- Do not write on furniture without a padded barrier to protect the surface.
- To obtain the longest lifespan of your outdoor products, avoid extended and lengthy exposure to rain, snow, and direct sunshine. Whenever possible cover the product and /or place under patio or awnings.
- Not for commercial use. For residential use only.
- Stains may be removed with mild soap solution and damp cloth.
- Dust and pick-up spills using a clean, non-colored, lint-free cloth .