SOFA

Assembly Instruction

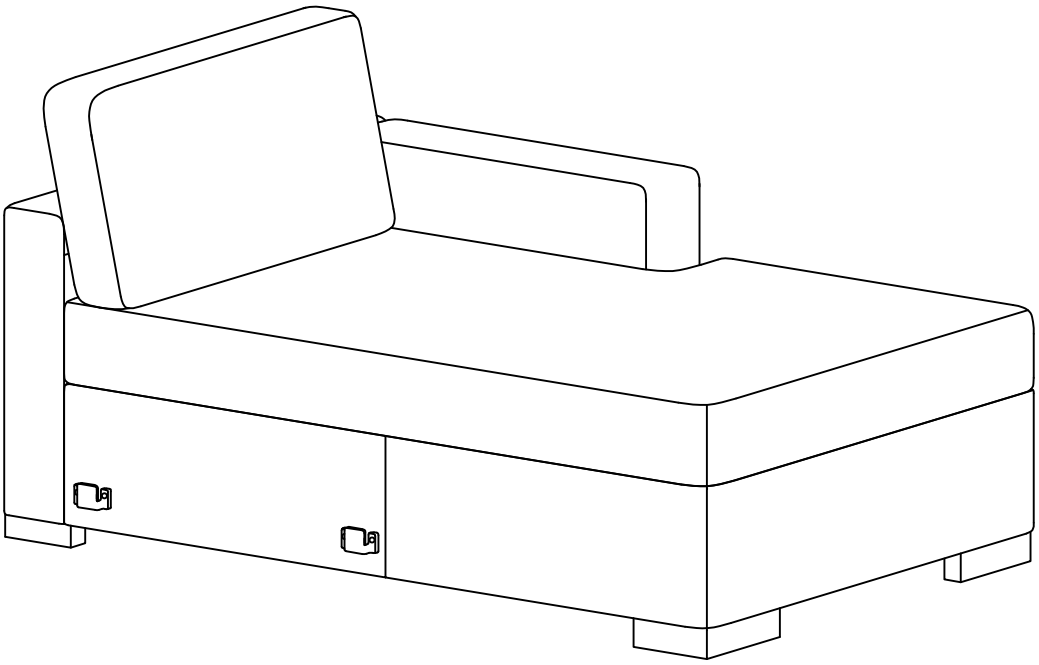

Dear customers,

Thank you for purchasing our product.Please read this instruction manual carefully after receiving this product.It will help you assemble this product quickly, safely,and correctly.You can keep this manual for future reference.

⚠ Safety and care advice

Important-Please read these instructions fully before starting assembly

Thanks for your purchase. Before the assembly please follow the instructions to check if all the spare parts and screws are intact.

- Considering the size and weight of the sofa,we recommend two adults to assemble the sofa,on a carpeted or padded area,in the room that it is intended for.Approximate assembly time:30 minutes.
- Keep all components and packaging out of reach of children or animals to avoid the risk of choking or suffocation.
- Please do not throw away any of the packaging or the instruction until you have checked all the components and hardware and the furniture is fully assembled. Please ensure that the packaging is disposed in a safe and environmentally friendly way.
- Please do not take off the cover,and do not wash.

Your cushions come vacuum packed and sealed for shipping. To restore the cushion's original shape,follow the steps below.

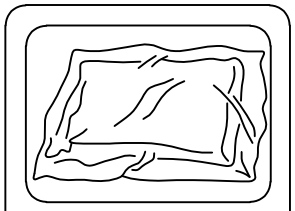
Open the vacuum bag carefully.

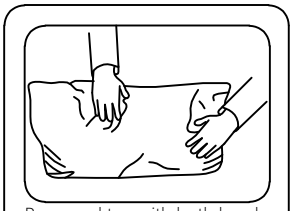
Press and tap with both hands from the side to fully inhale air.

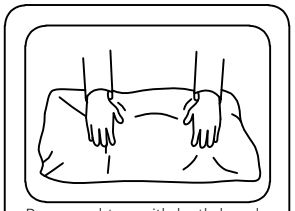
Press and tap with both hands from the front to fully inflate.

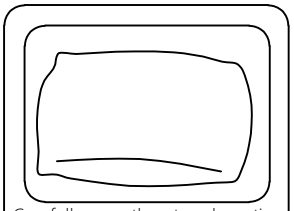
Carefully smooth out each section until the surface is even.

After packing up,place them in somewhere dry and ventilated. After about 72-96 hours. It can be restored to the best use condition.

Assembly Instruction of Sofa

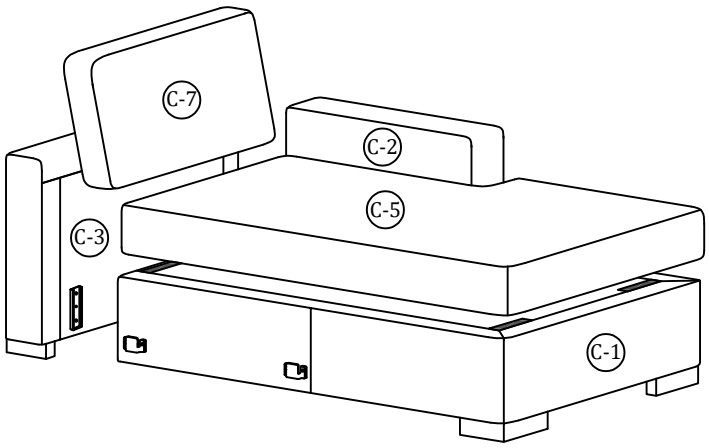

Hardware parts

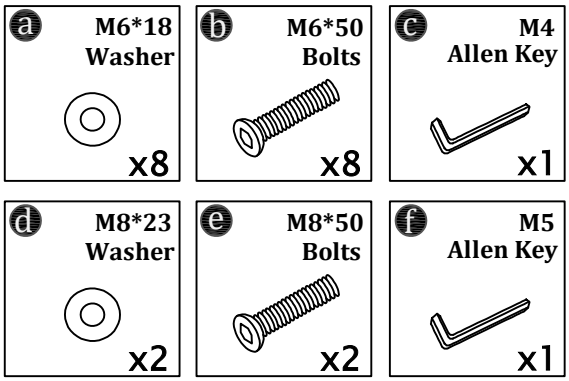

Structural accessories

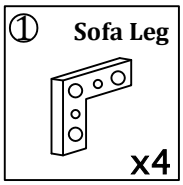

Main structure accessories

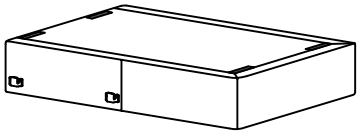

C-1 1pc

Sofa Frame

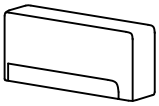

C-2 1pc

Armrest(R)

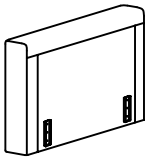

C-3 1pc

Back Frame

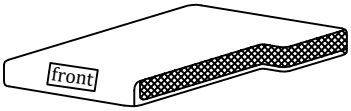

C-4 1pc

Seat Foam

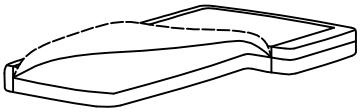

C-5 1pc

Seat Pad Cover

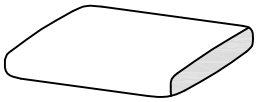

C-6 1pc

Back Foam

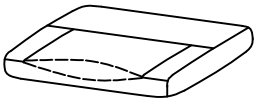

C-7 1pc

Back Cover

Assembly Instruction of Sofa

Step 1

Attention!

Take out of the accessories from the bottom of C-1.

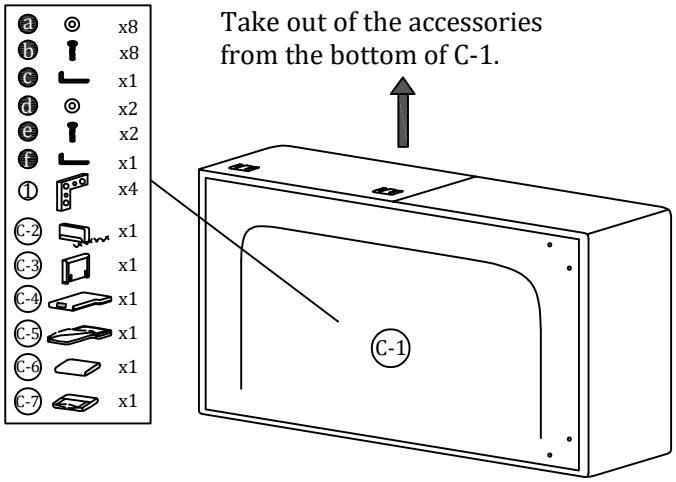

Step 2

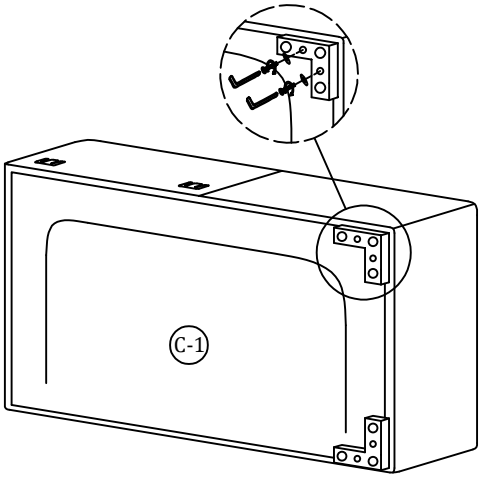

c	x1
b	x4
a	x4
①	x2

Step 3

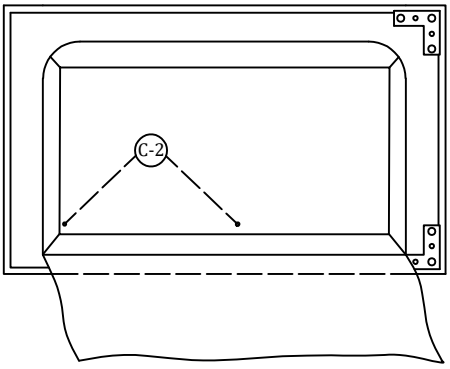

Accessory numbers correspond to the hole position.

Step 4

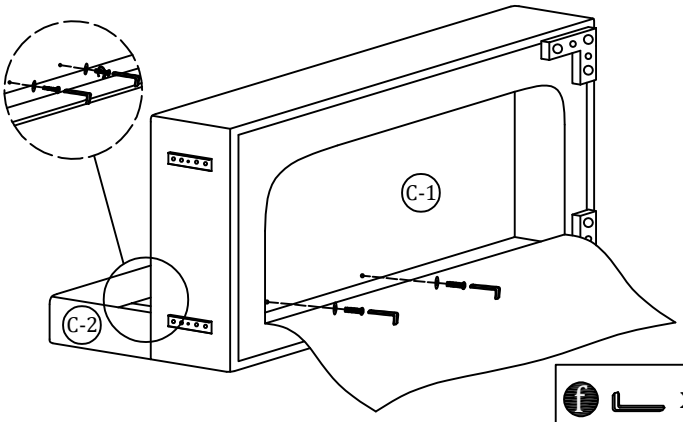

f	x1
e	x2
d	x2

Step 5

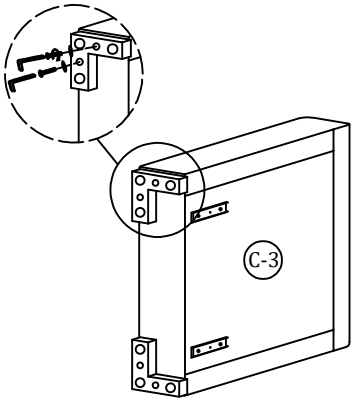

c	x1
b	x4
a	x4
①	x2

Step 6

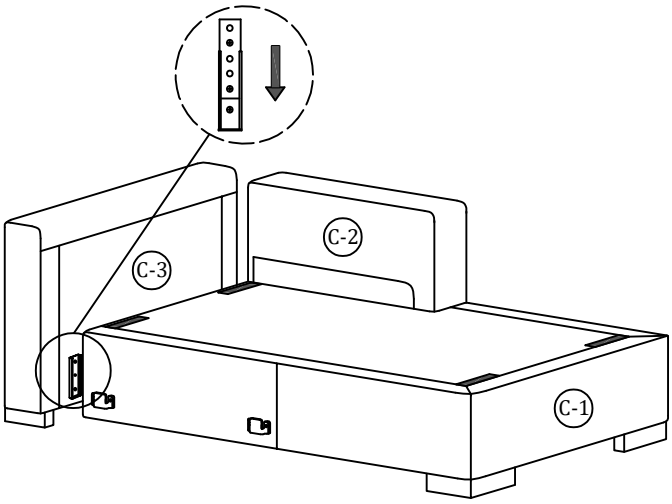

Assembly Instruction of Sofa

Step 7

② Take out the Seat Foam(C-4).

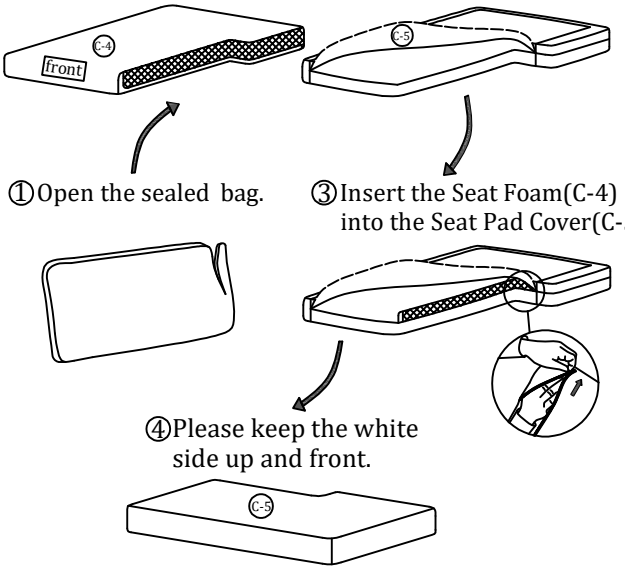

①Open the sealed bag.

③Insert the Seat Foam(C-4) into the Seat Pad Cover(C-5).

④Please keep the white side up and front.

Step 8

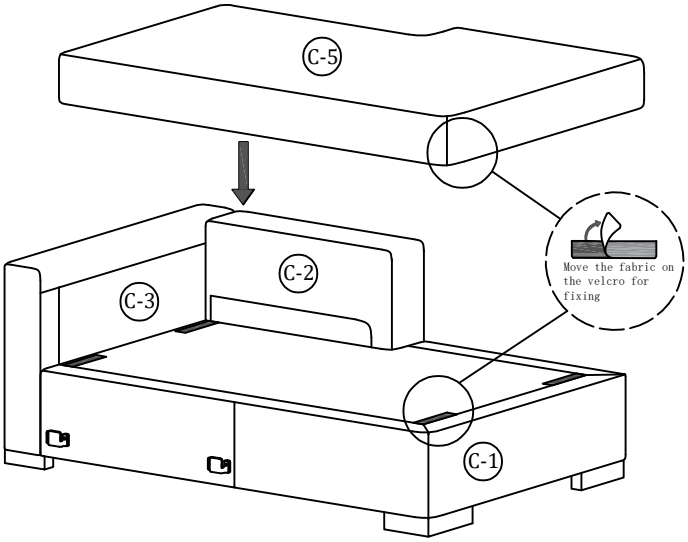

Step 9

② Take out the Back Foam(C-6).

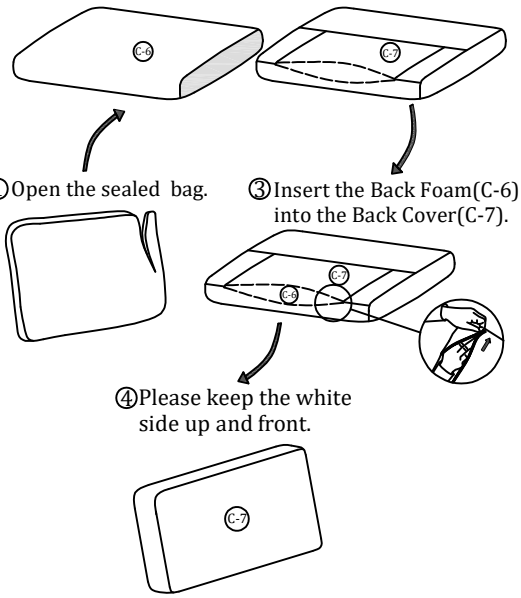

①Open the sealed bag.

③Insert the Back Foam(C-6) into the Back Cover(C-7).

④Please keep the white side up and front.

Step 10

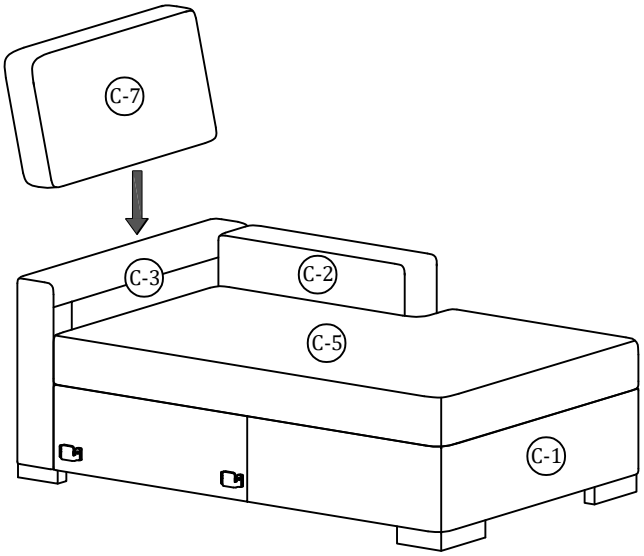

Step 11

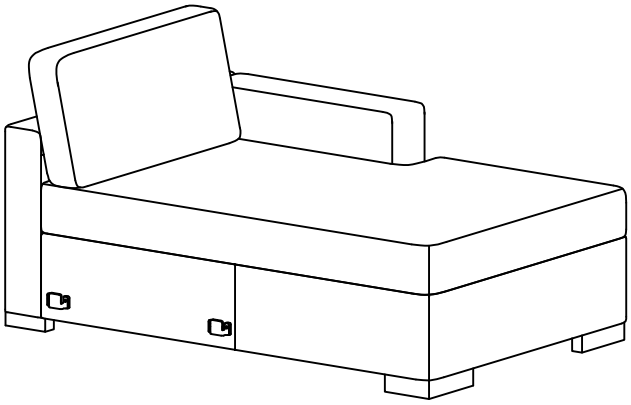

Assembly Instruction of Combination

Step 1

Additional products need to be purchased before connecting.

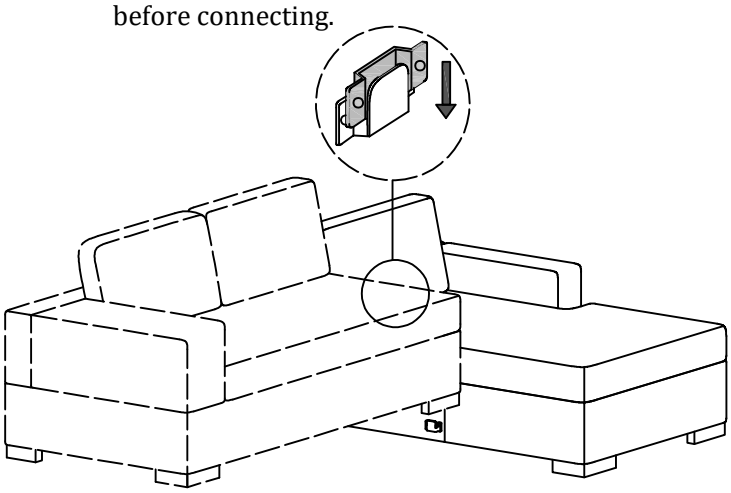

Step 2

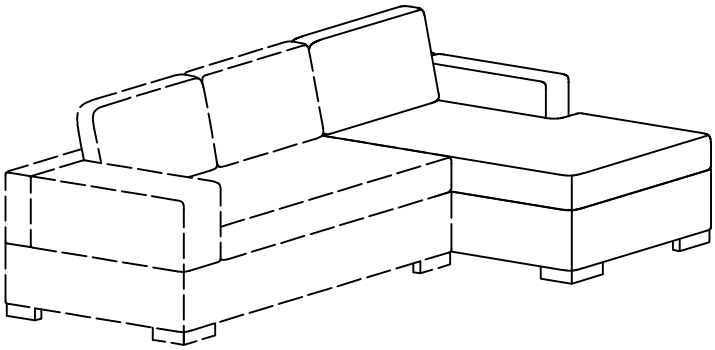

Step 3

Additional products need to be purchased before connecting.

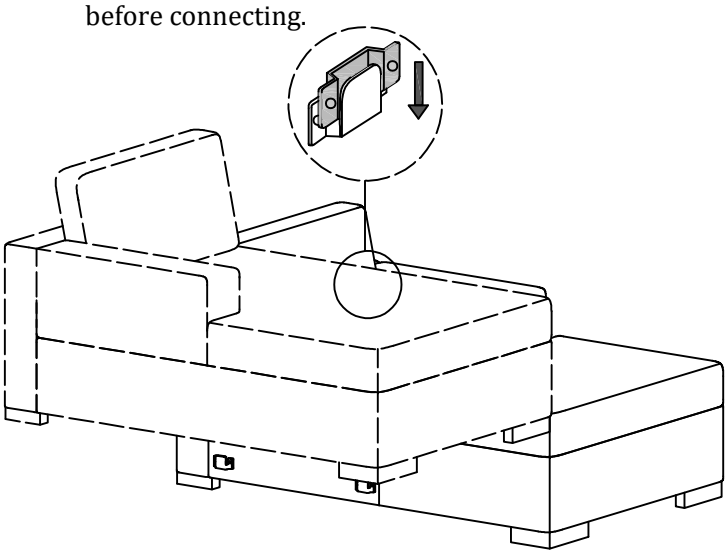

Step 4

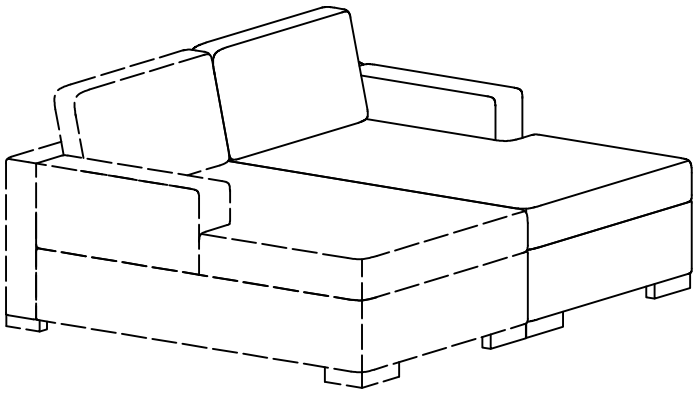

Assembly Instruction of Combination

Step 5

Additional products need to be purchased before connecting.
Assemble from right to left.

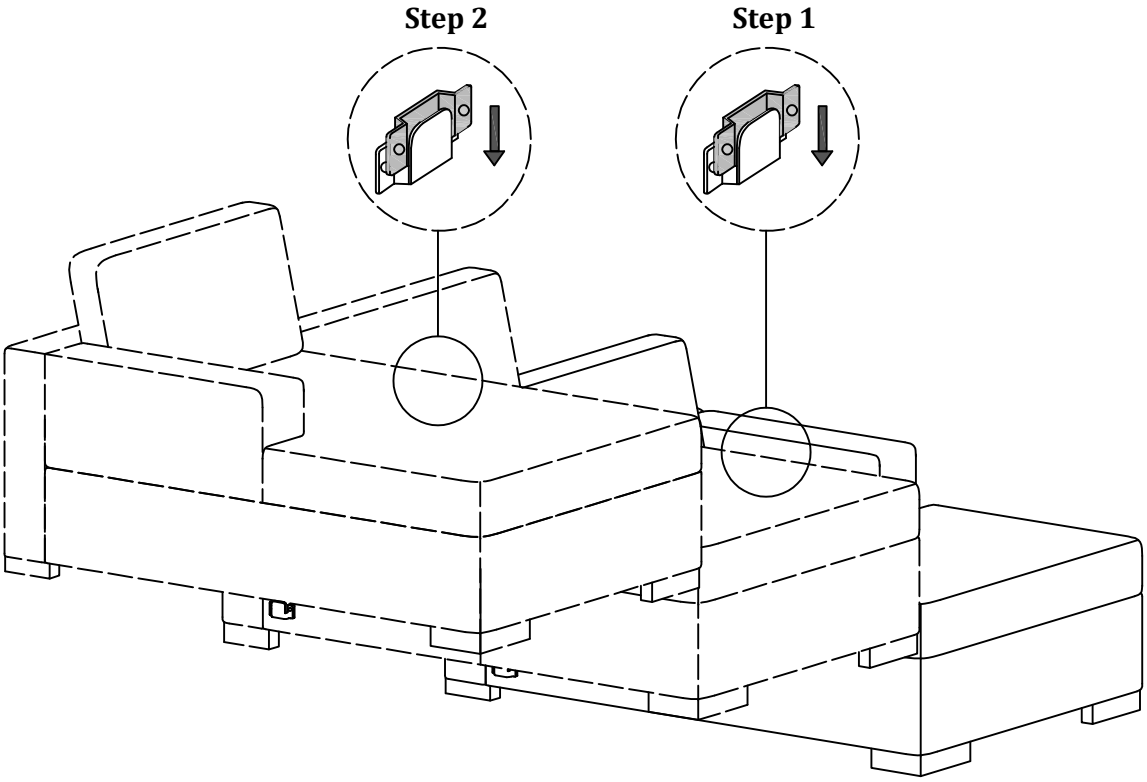
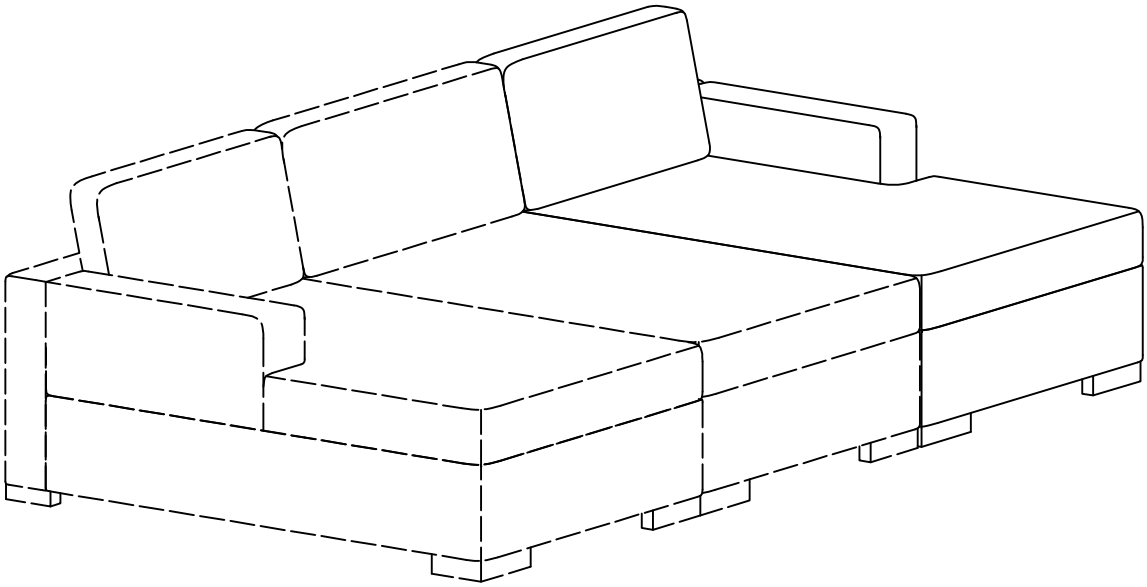
Step 6