RA4FA1-A ASSEMBLY INSTRUCTION

Thanks for buying our products, read it carefully before installation.
Please contact us in case of any problem, regarding assembly or the product itself, a smile on your face is our top priority.
(Attention: Don't tighten the screw before all screws are in place)

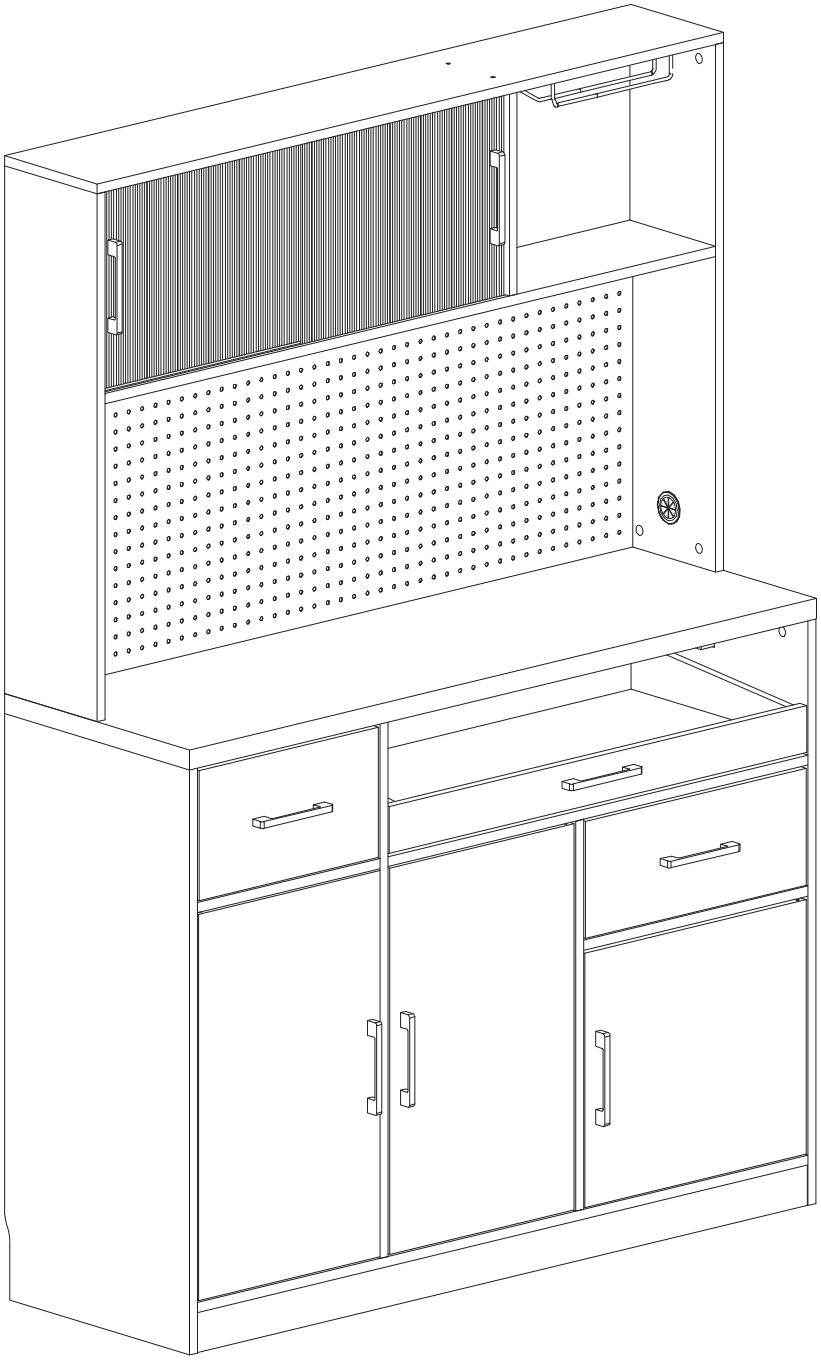

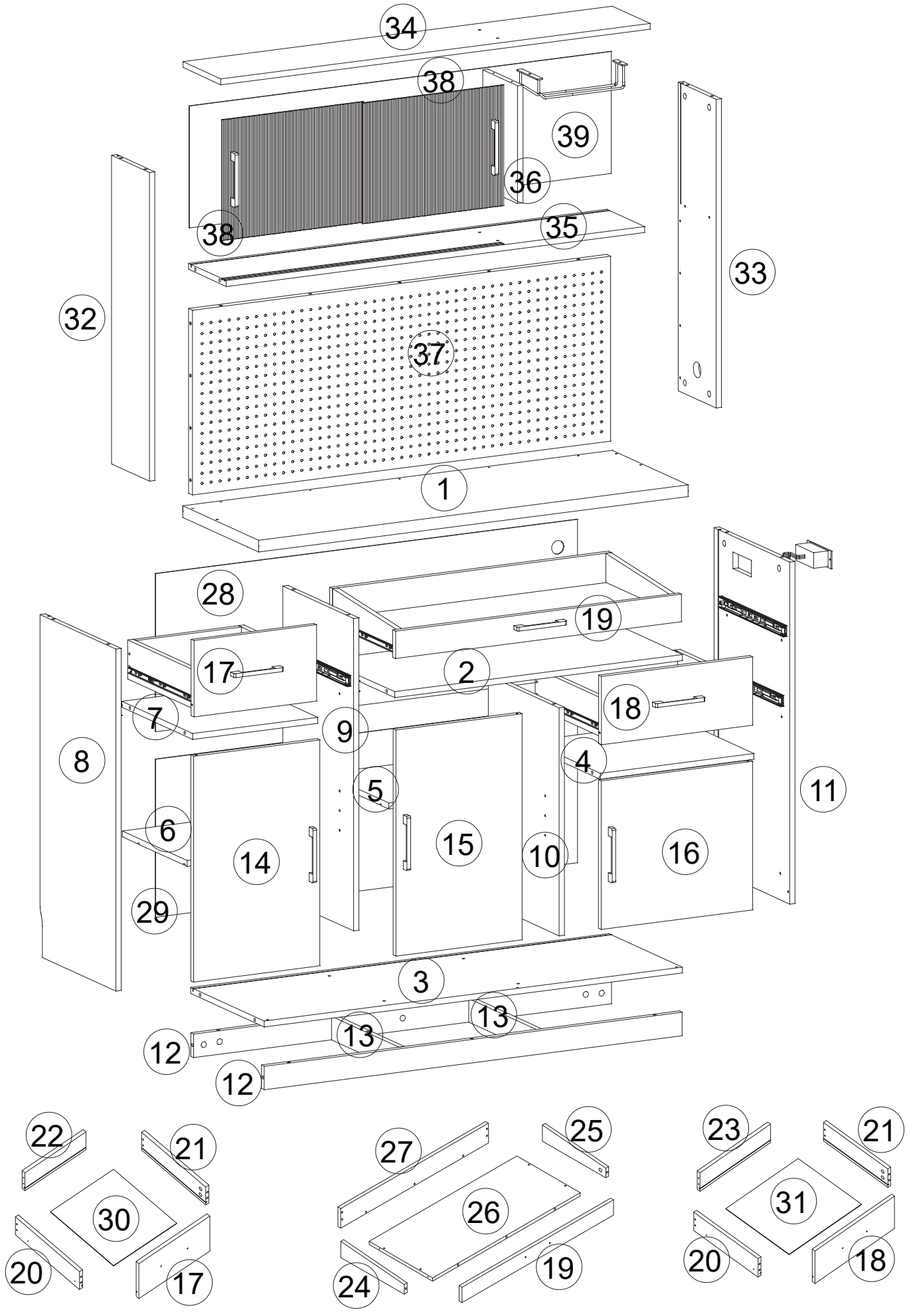
34
38
39
36
38
35
33
32
37
1
28
19
17
2
18
7
9
8
4
5
11
6
15
10
16
14
29
3
13
13
12
12
22
21
30
20
17
27
25
26
24
19
23
21
31
20
18

1 *1 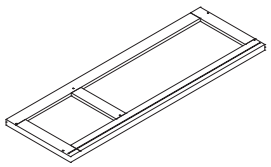	2 *1 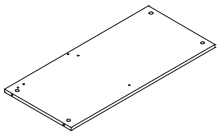	3 *1 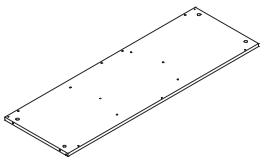	4 *1 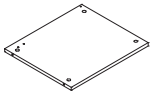	5 *1 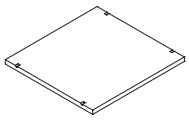
6 *1 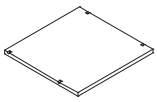	7 *1 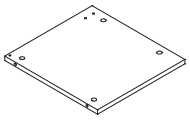	8 *1 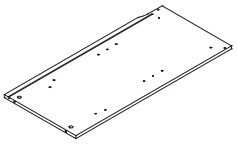	9 *1 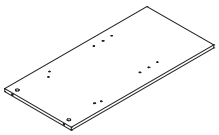	10 *1 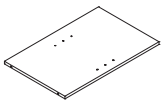
11 *1 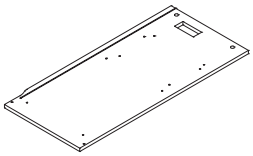	12 *2 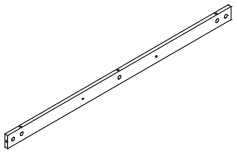	13 *2 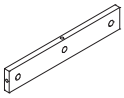	14 *1 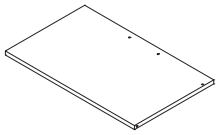	15 *1 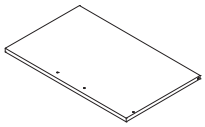
16 *1 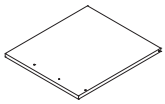	17 *1 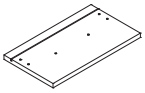	18 *1 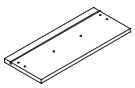	19 *1 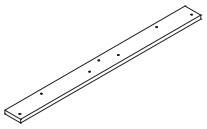	20 *2 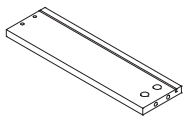
21 *2 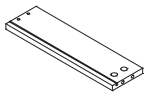	22 *1 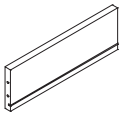	23 *1 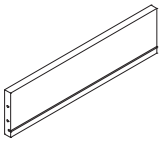	24 *1 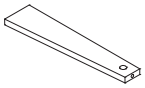	25 *1 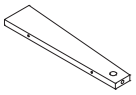
26 *1 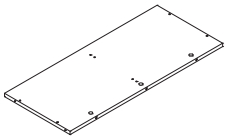	27 *1 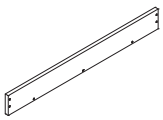	28 *1 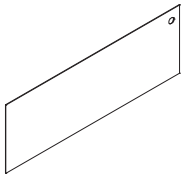	29 *1 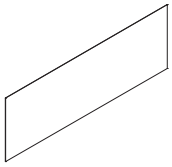	30 *1 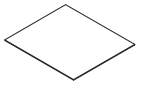
31 *1 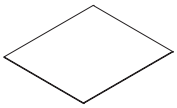	32 *1 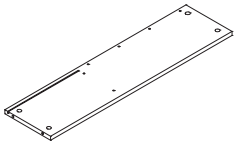	33 *1 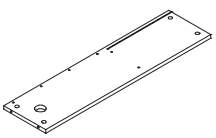	34 *1 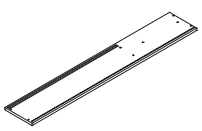	35 *1 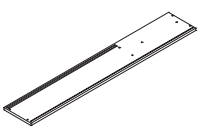

36 *1 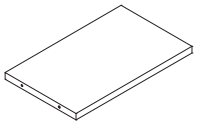	37 *1 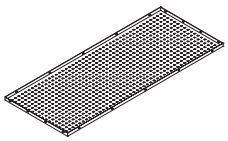	38 *2 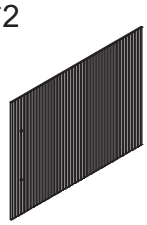	39 *1 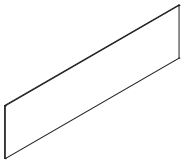	
A*65 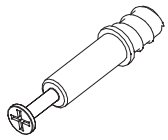 M6*28	B*65 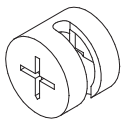 M15	C*27 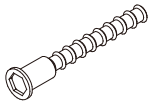 M5*40	D*12  M4*18	E*4  M4*8
F*77 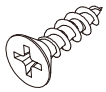 M3.5X12	G*11 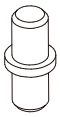	H*3 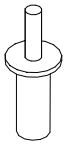	J*8 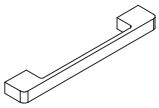	K*2 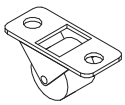
L*1 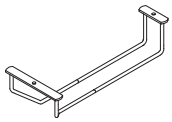	M*1 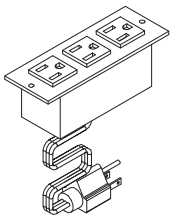	N*2 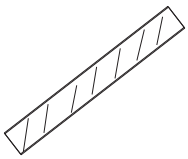 Foam pad	P*6 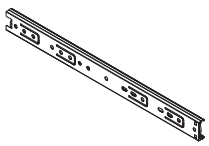	Q*24 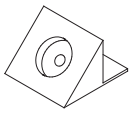
R*3 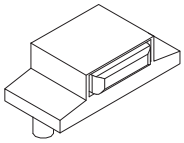	S*3 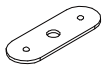	T*1 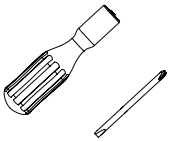	U*1 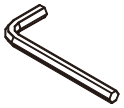 M3	V*2 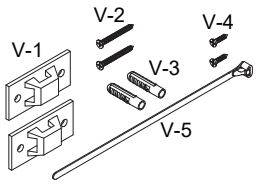
W*1 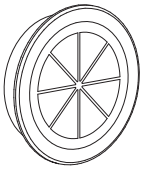	Y*6  Eccentric cover			

S1

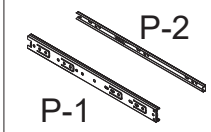

P*6

Press up while pulling out

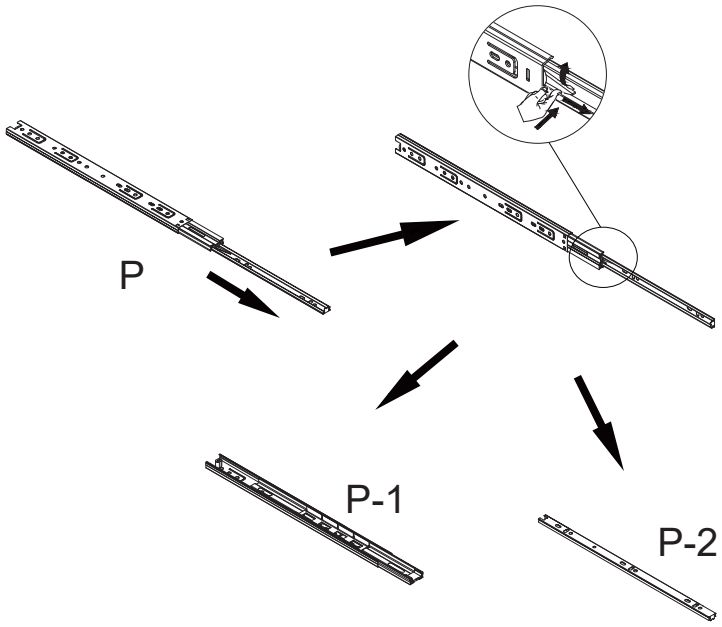

S2

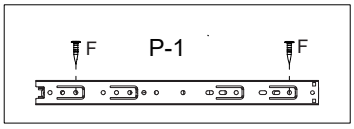

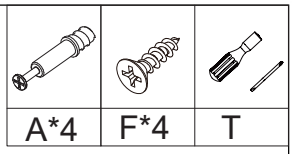

A*4 | F*4 | T

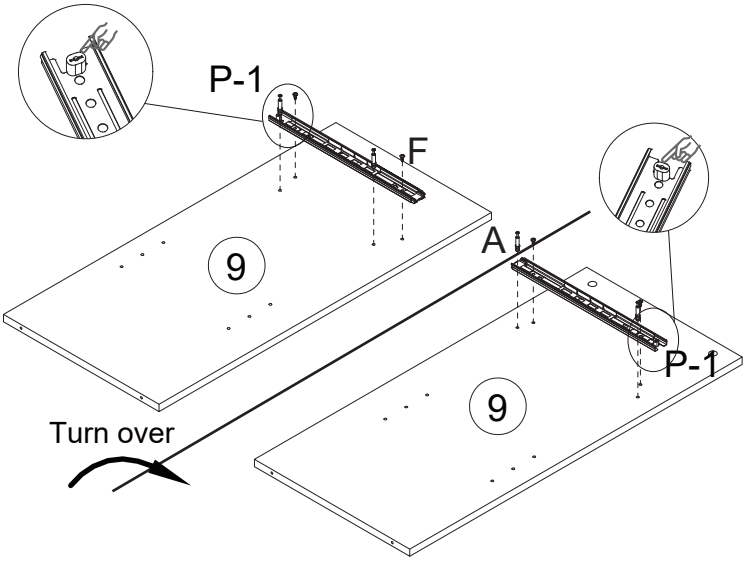

S3

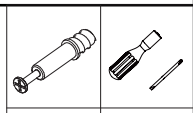

A*2 | T

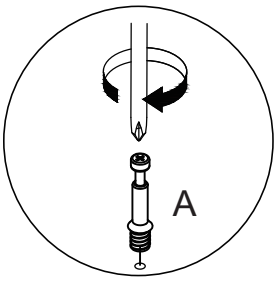

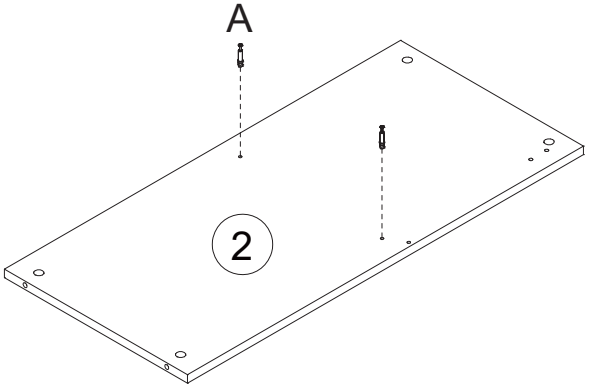

S4

Insert the minifix (B) with the cross-arrow mark facing upward and aligned with the panel's top through hole. Then tighten it clockwise

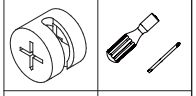

B*4 | T

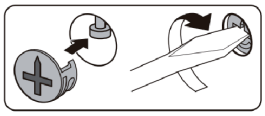

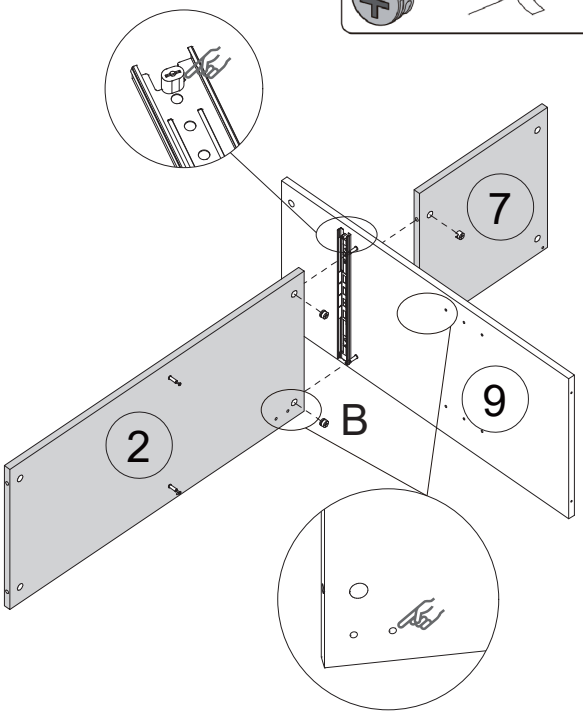

S5

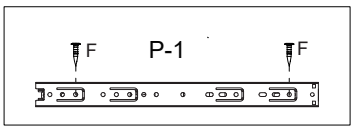

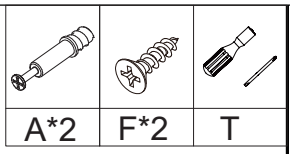

A*2	F*2	T

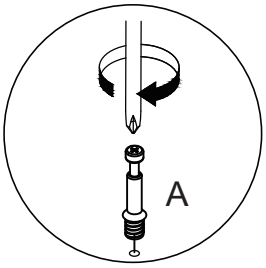

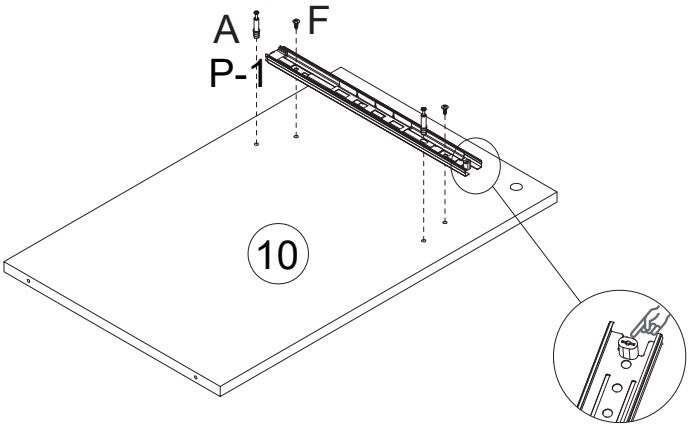

S6

Insert the minifix (B) with the cross-arrow mark facing upward and aligned with the panel's top through hole. Then tighten it clockwise

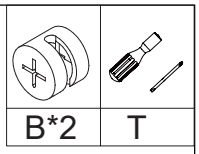

B*2	T

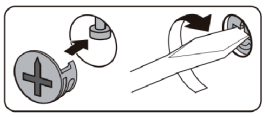

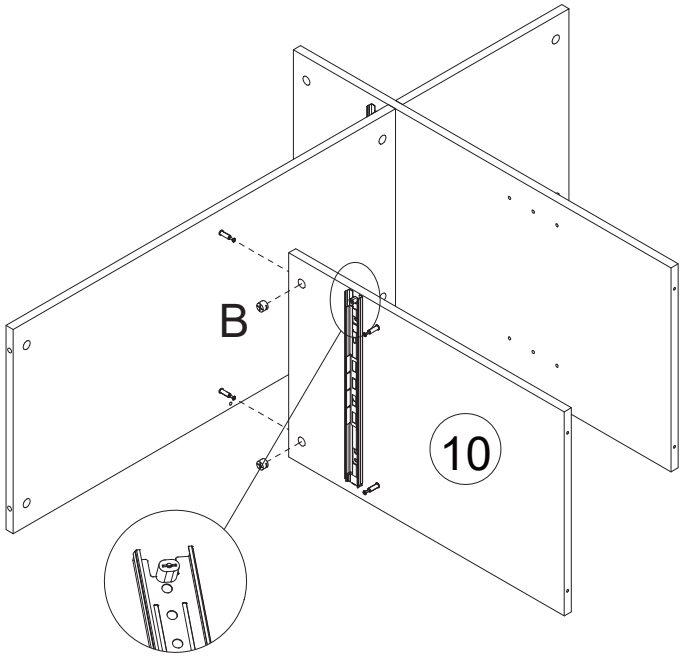

S7

Insert the minifix (B) with the cross-arrow mark facing upward and aligned with the panel's top through hole. Then tighten it clockwise

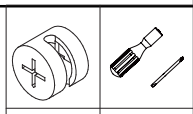

B*2	T

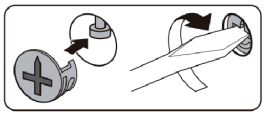

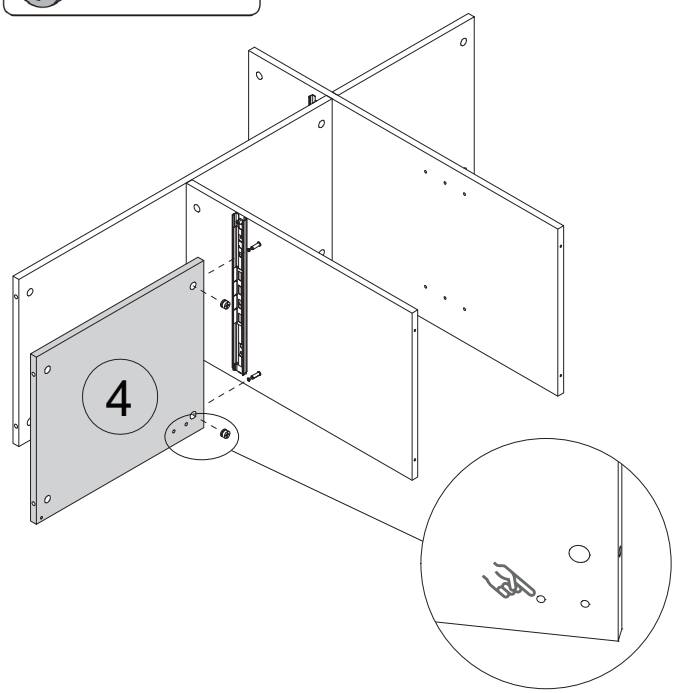

S8

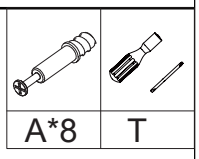

A*8	T

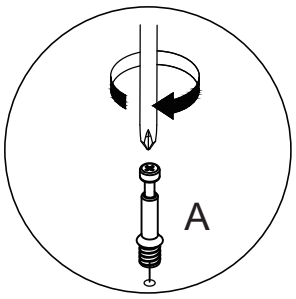

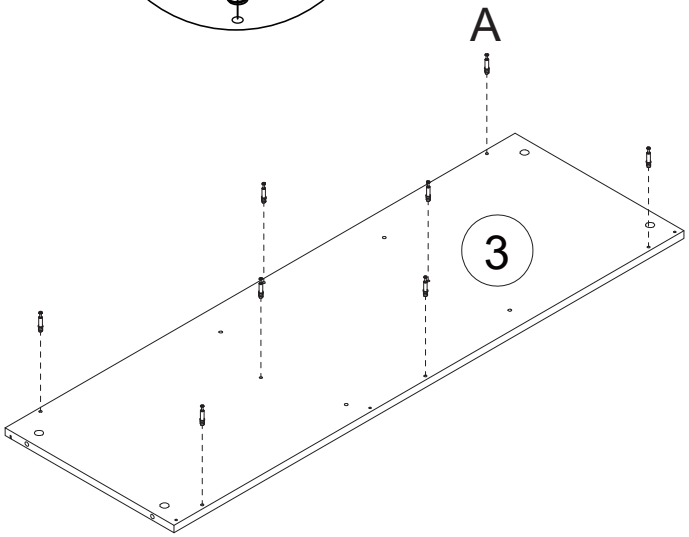

S9

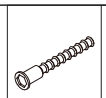


C*4	U

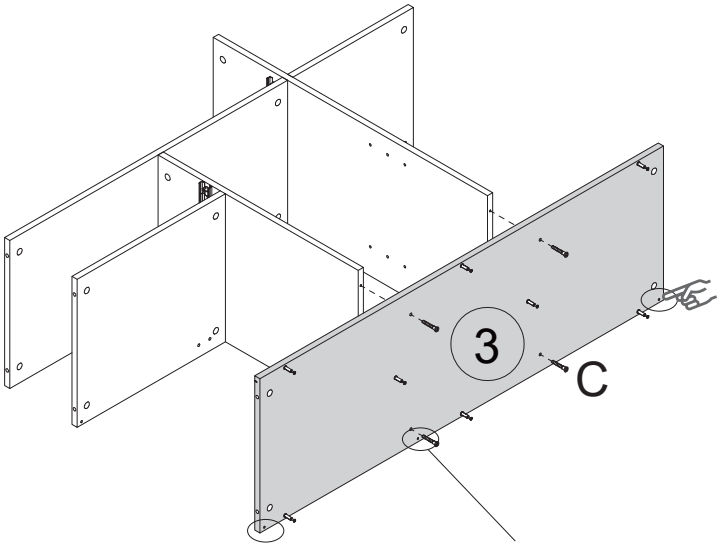

Pay attention to the hole positions during installation.

S10

X2

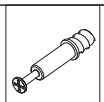
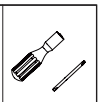

A*4	T

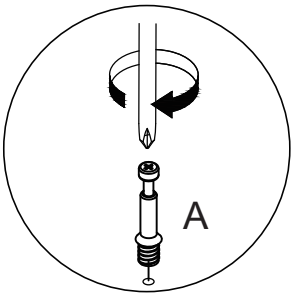

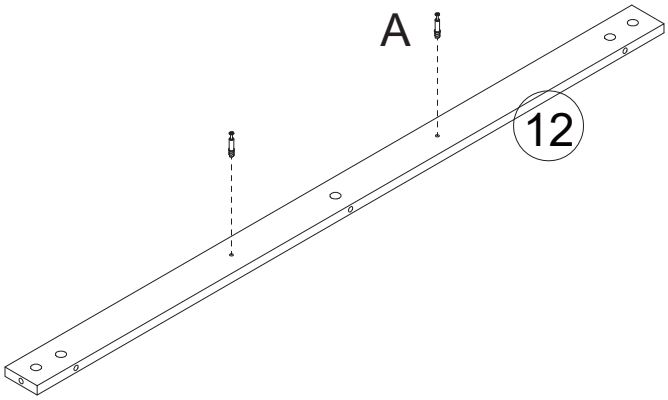

S11




B*4	T

Pay attention to the hole positions during installation.

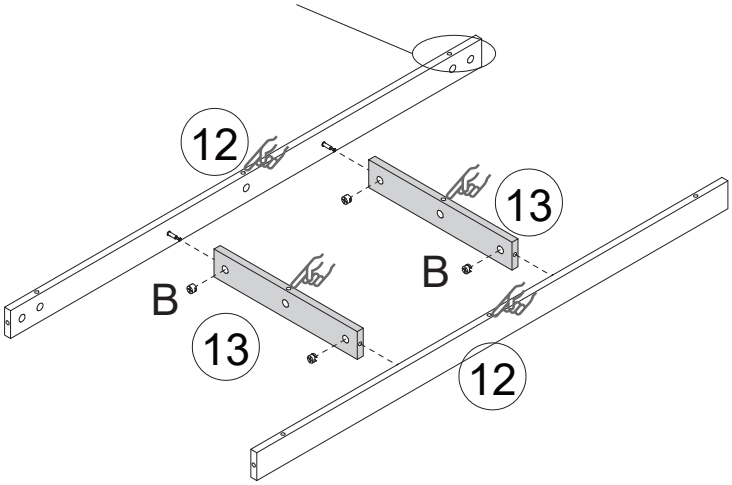

S12

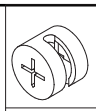
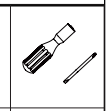

B*8	T

Insert the minifix (B) with the cross-arrow mark facing upward and aligned with the panel's top through hole. Then tighten it clockwise

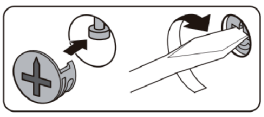

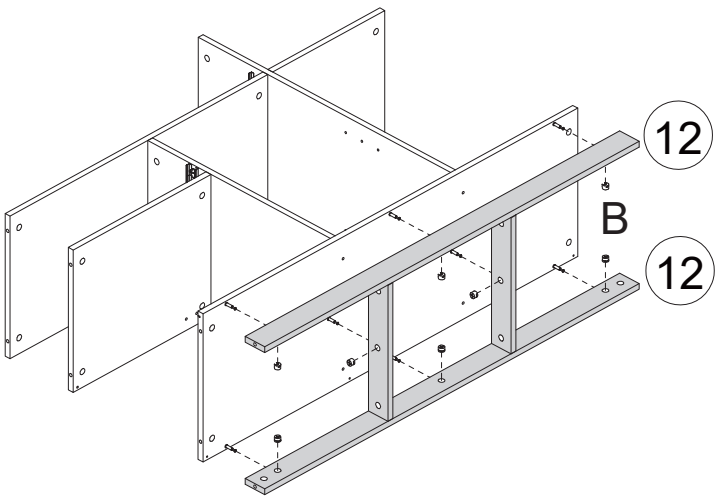

S13

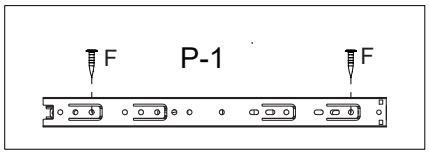

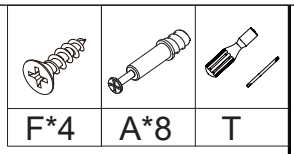

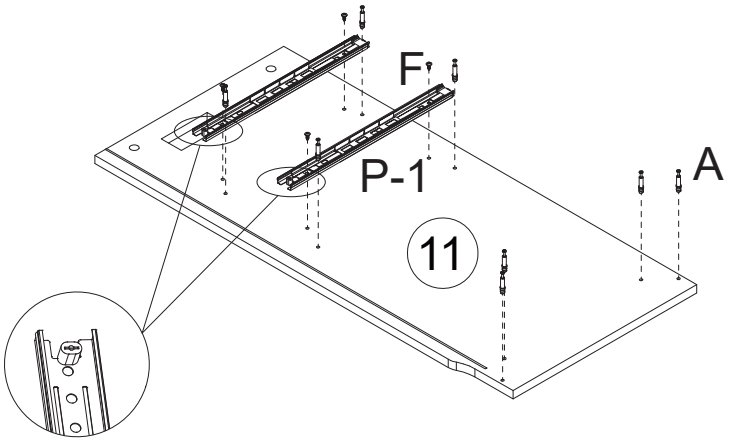

S14

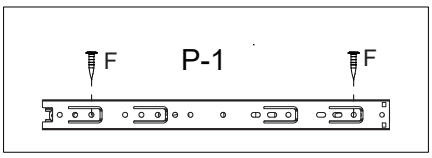

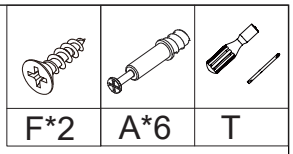

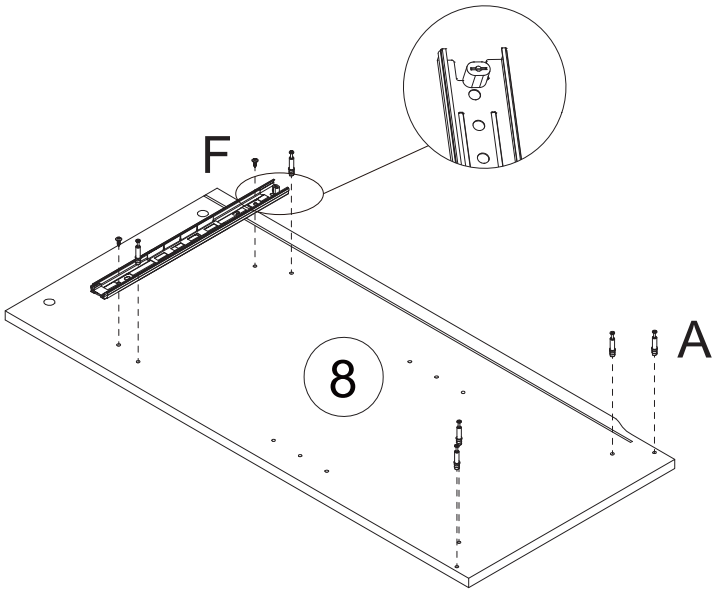

S15

Insert the minifix (B) with the cross-arrow mark facing upward and aligned with the panel's top through hole. Then tighten it clockwise

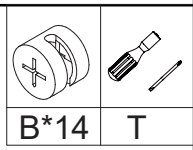

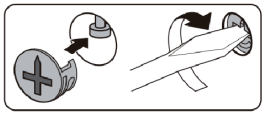

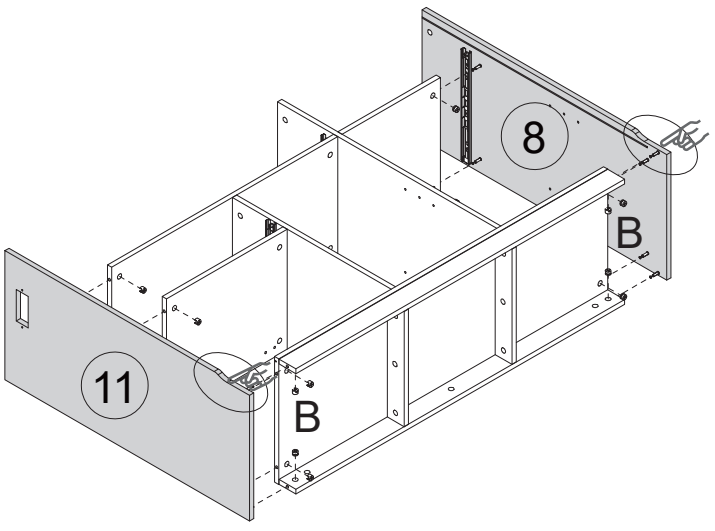

S16

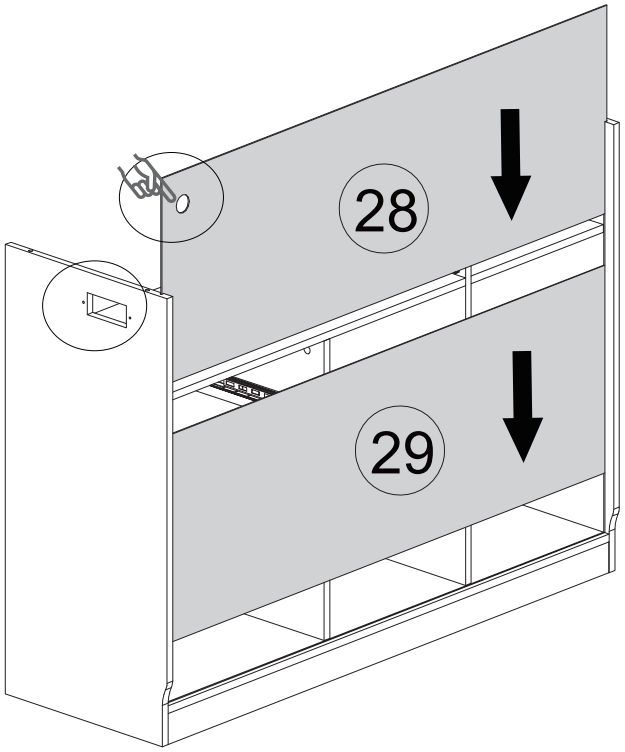

S17

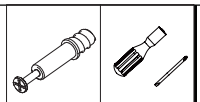

A*6 | T

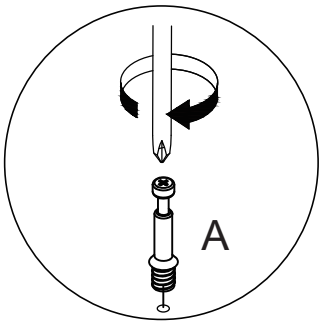

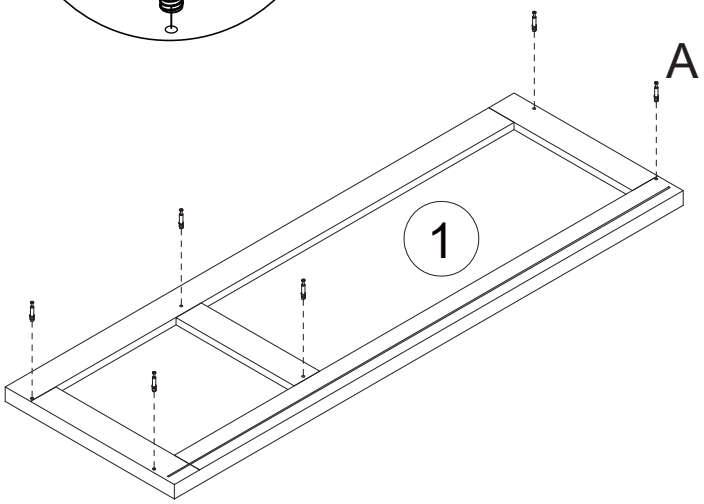

S18

Insert the minifix (B) with the cross-arrow mark facing upward and aligned with the panel's top through hole. Then tighten it clockwise

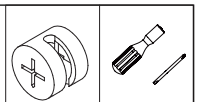

B*6 | T

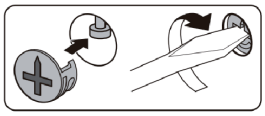

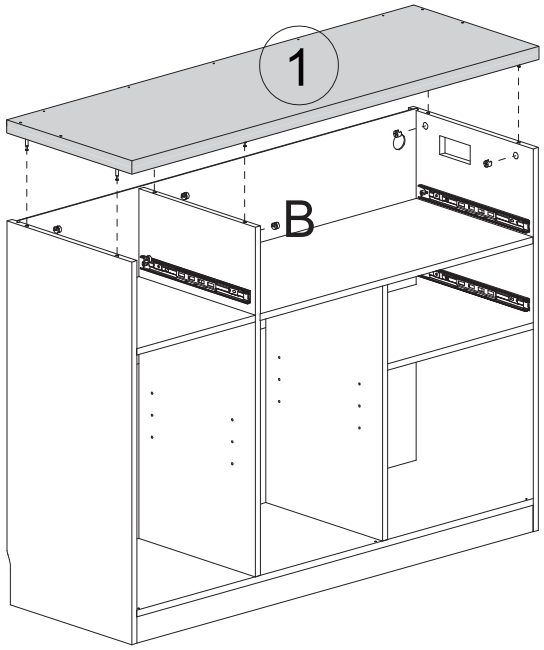

S19

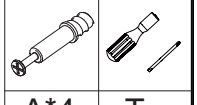

A*4 | T

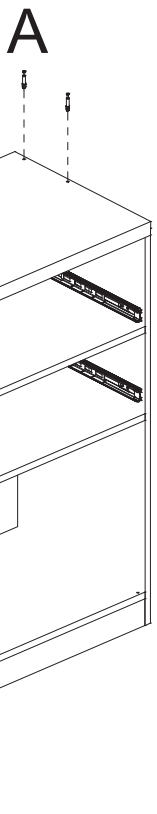

S20

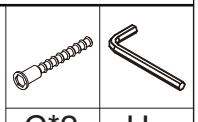

C*2 | U

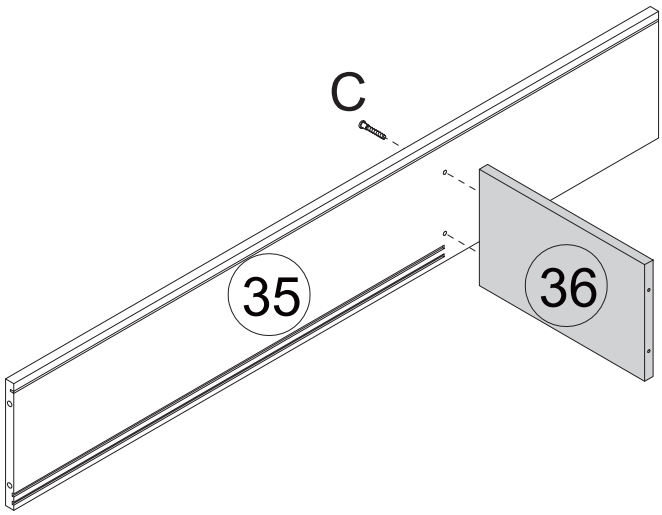

S21

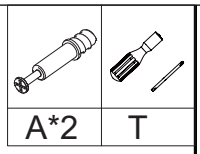

A*2 | T

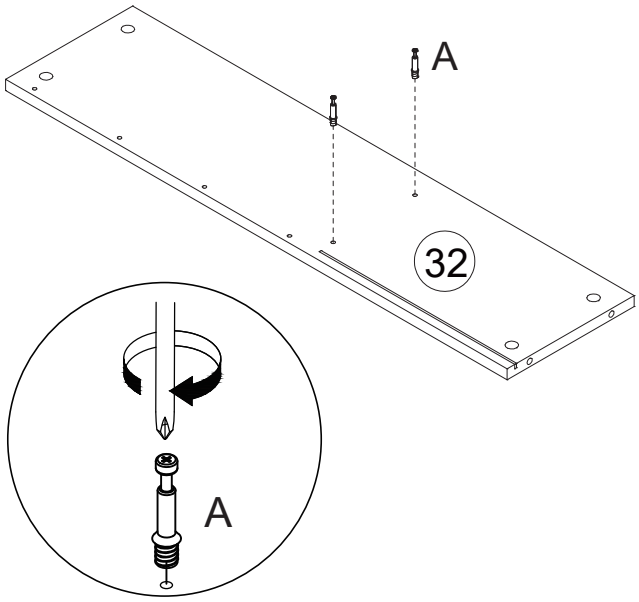

S22

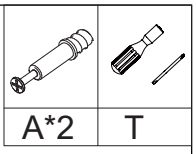

A*2 | T

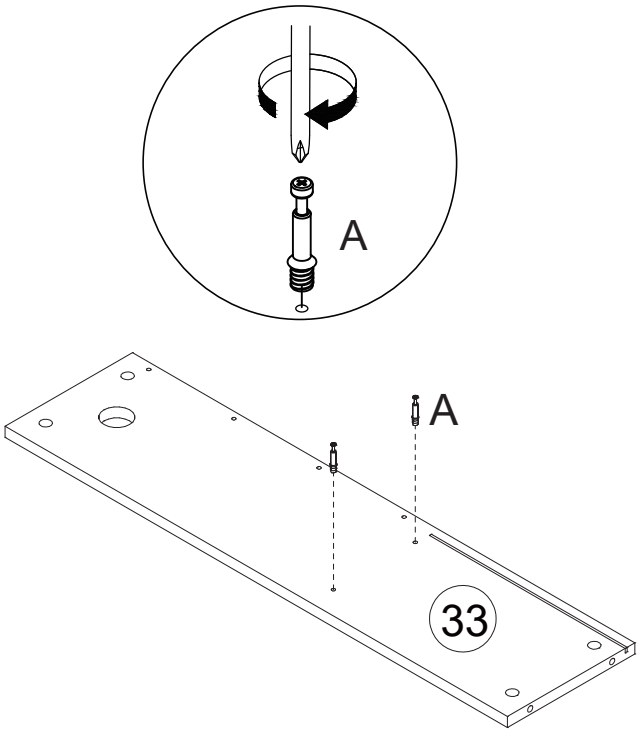

S23

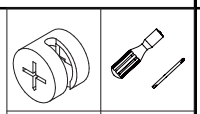

B*4 | T

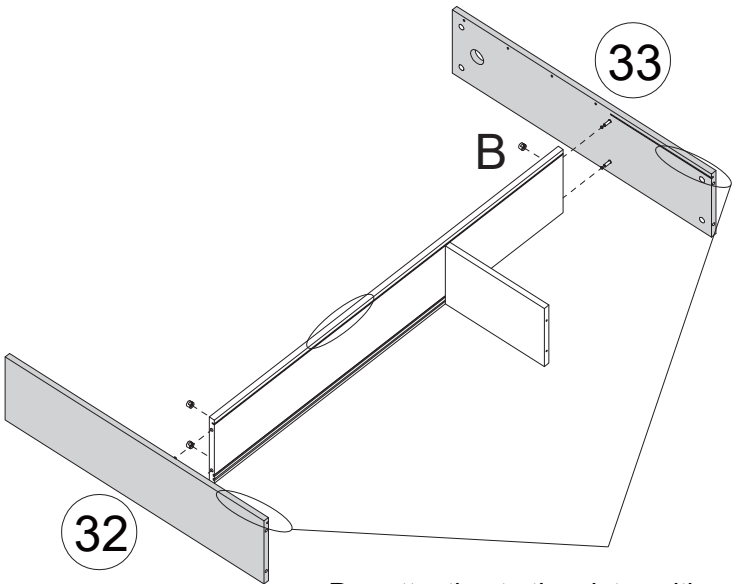

Pay attention to the slot position during installation.

S24

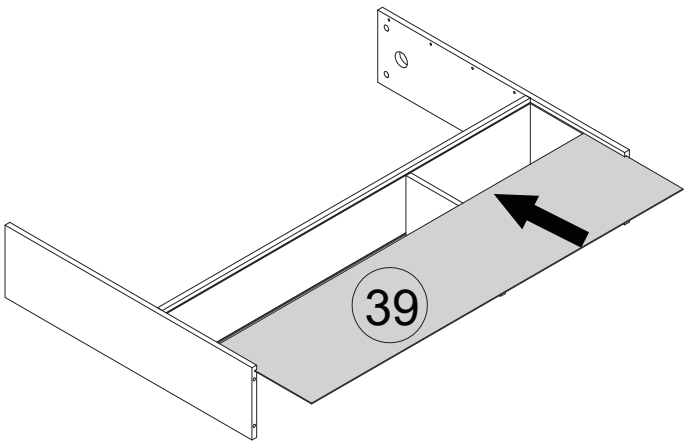

S25

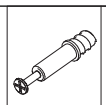


A*4	T

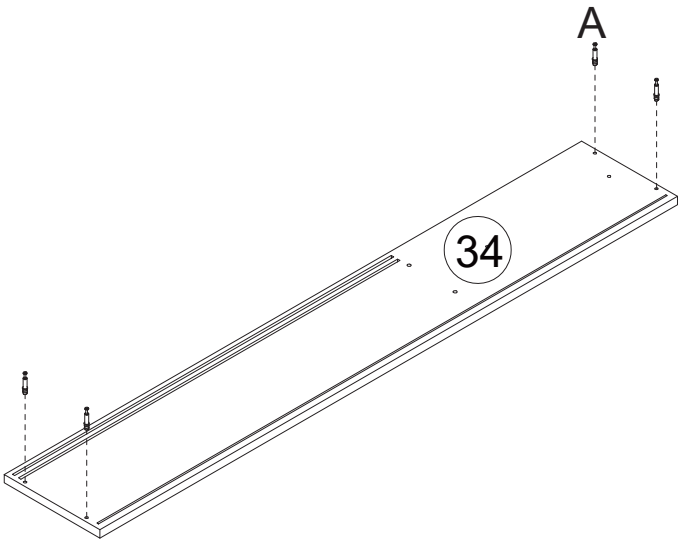

S26

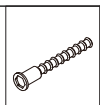
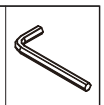

C*2	U

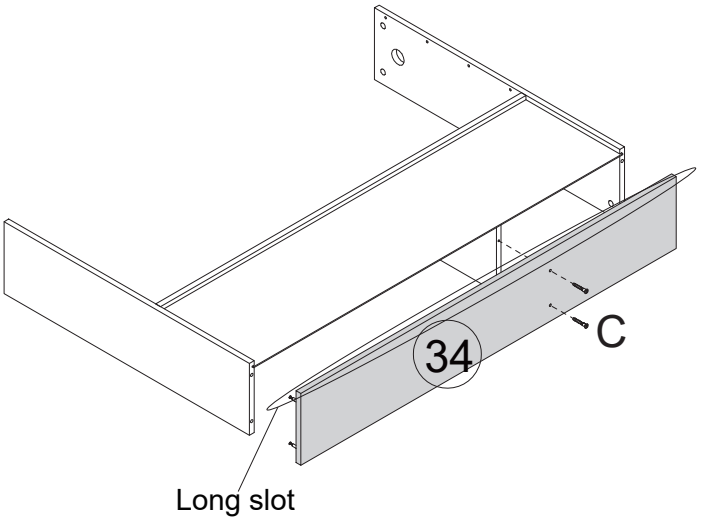

S27




F*13	T

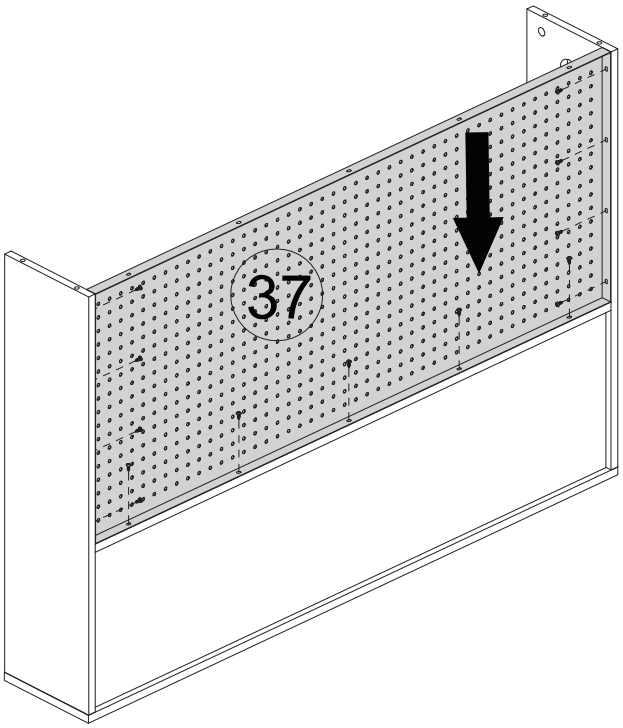

S28

Insert the minifix (B) with the cross-arrow mark facing upward and aligned with the panel's top through hole. Then tighten it clockwise


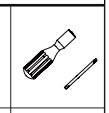

B*4	T

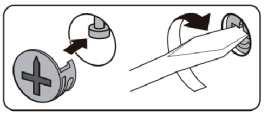

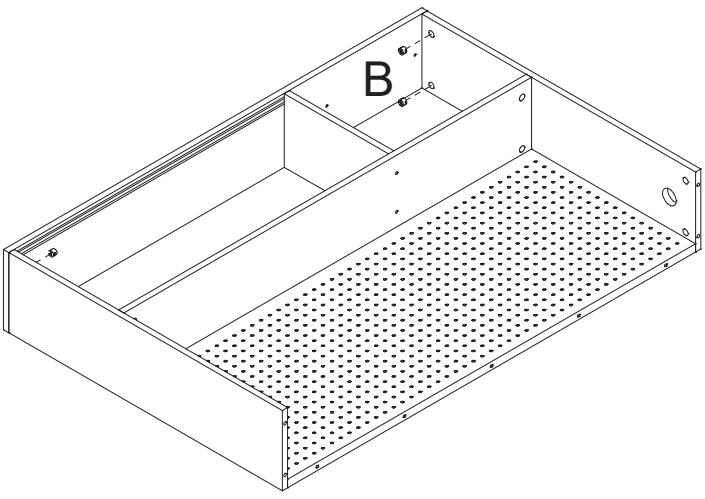

S29 Insert the minifix (B) with the cross-arrow mark facing upward and aligned with the panel's top through hole. Then tighten it clockwise

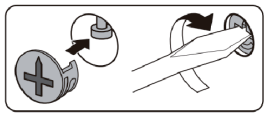

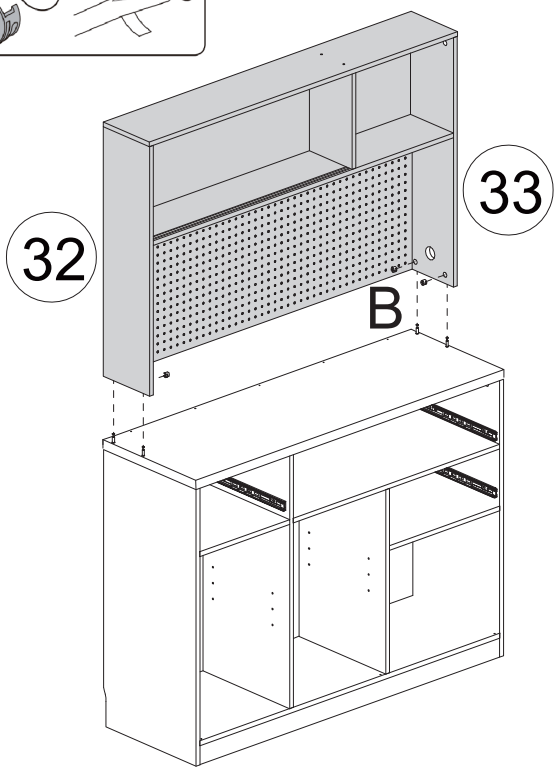

B*4	T

S30

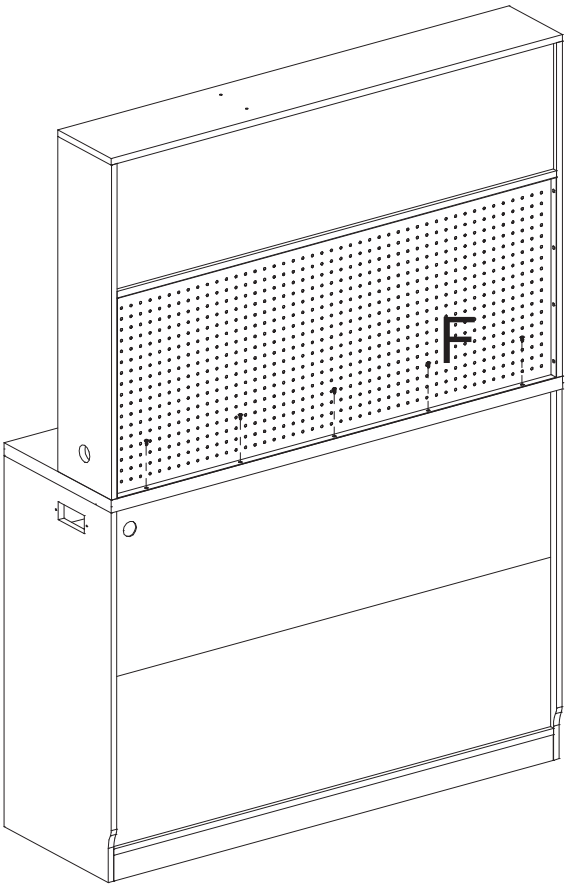

F*5	T

S31

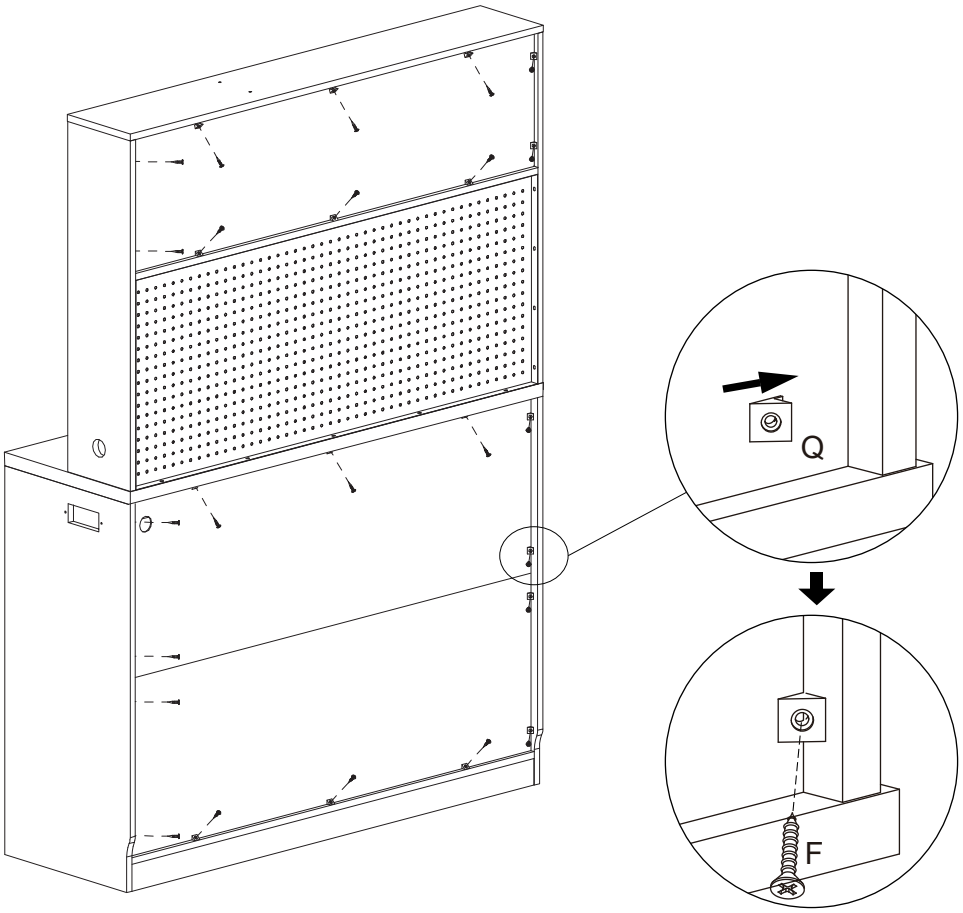

Q*24	F*24	T

S32

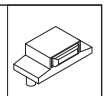

R*3

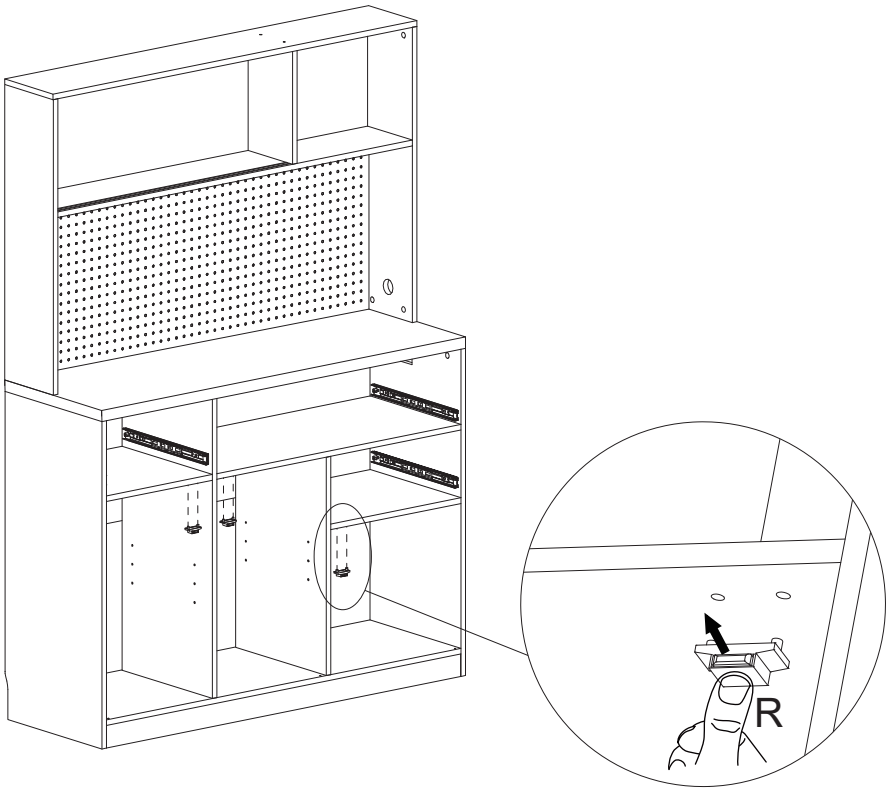

When installing, the magnetic side should face outward.

S33

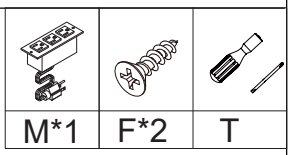

M*1 | F*2 | T

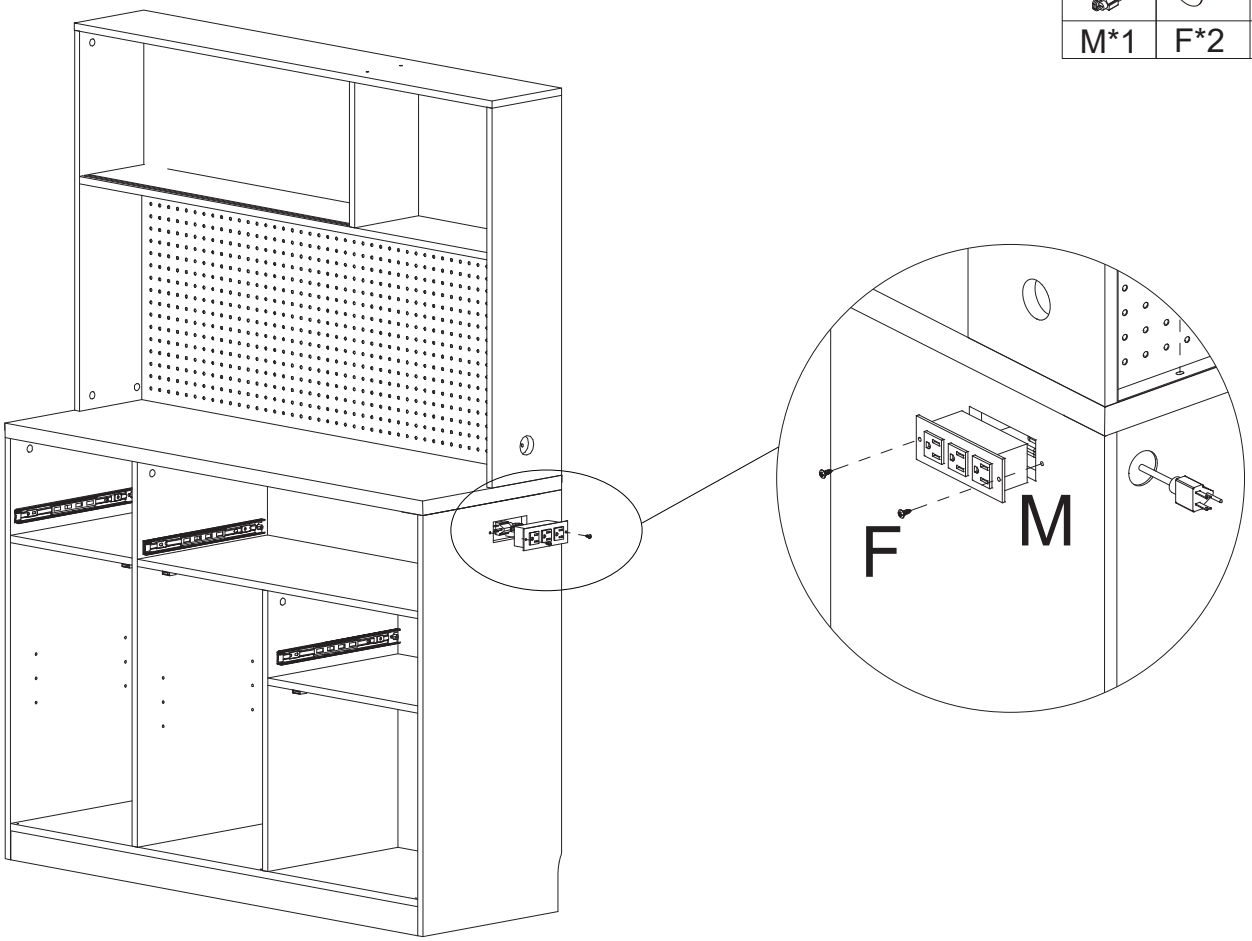

S34

L*1	F*2	T

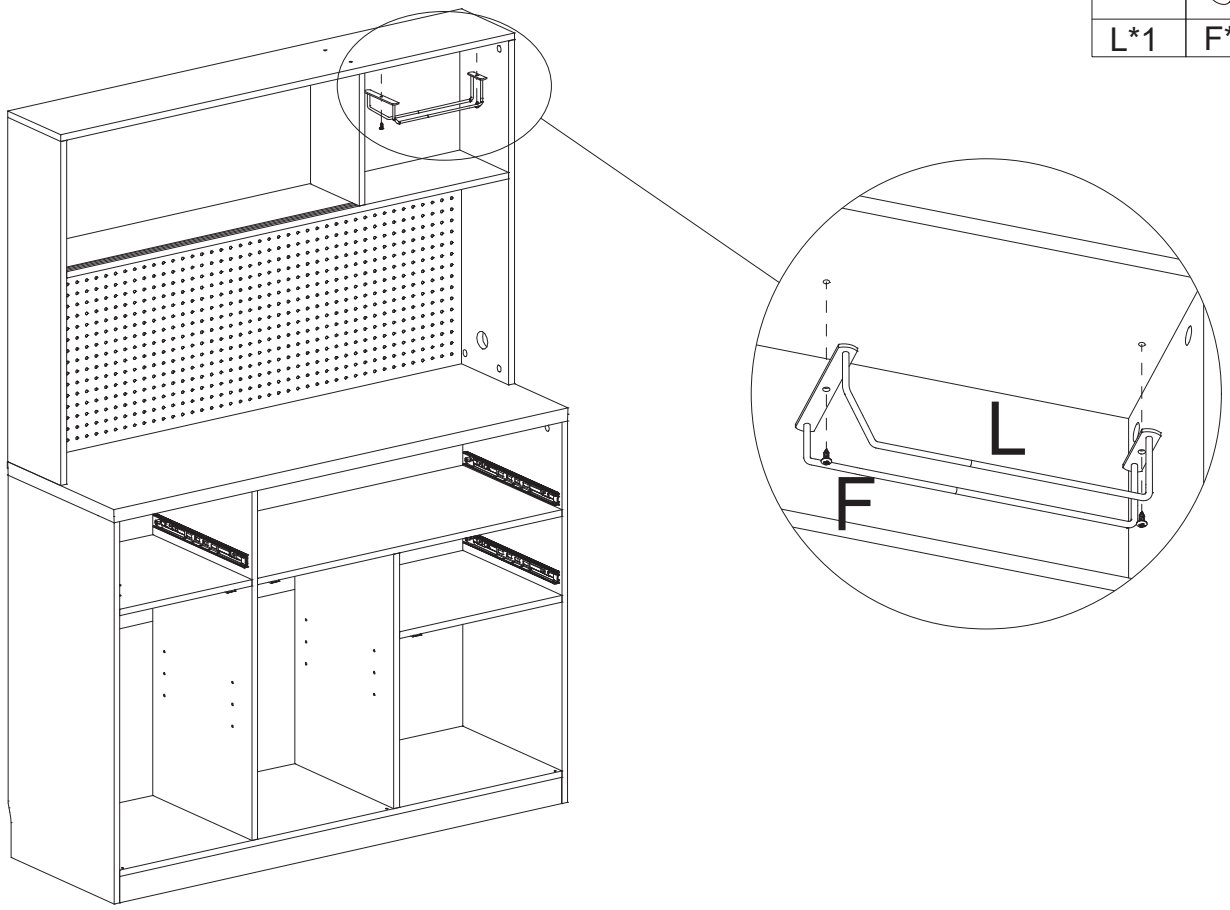

S35

A*4	T

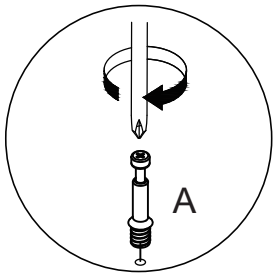

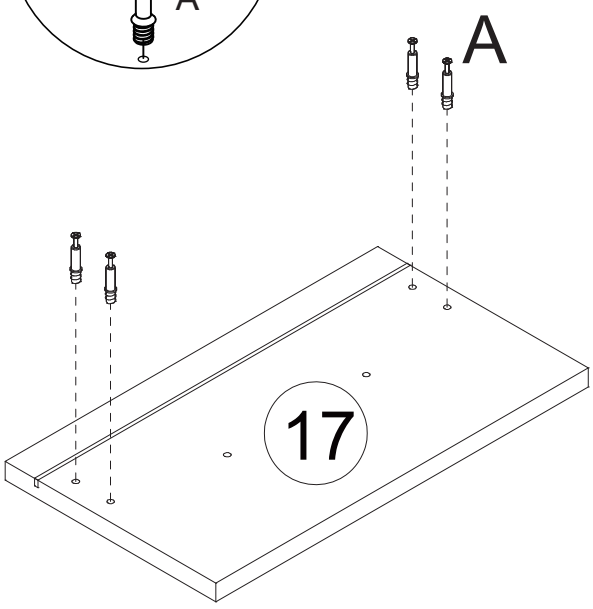

S36

Insert the minifix (B) with the cross-arrow mark facing upward and aligned with the panel's top through hole. Then tighten it clockwise

B*4	T

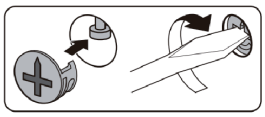

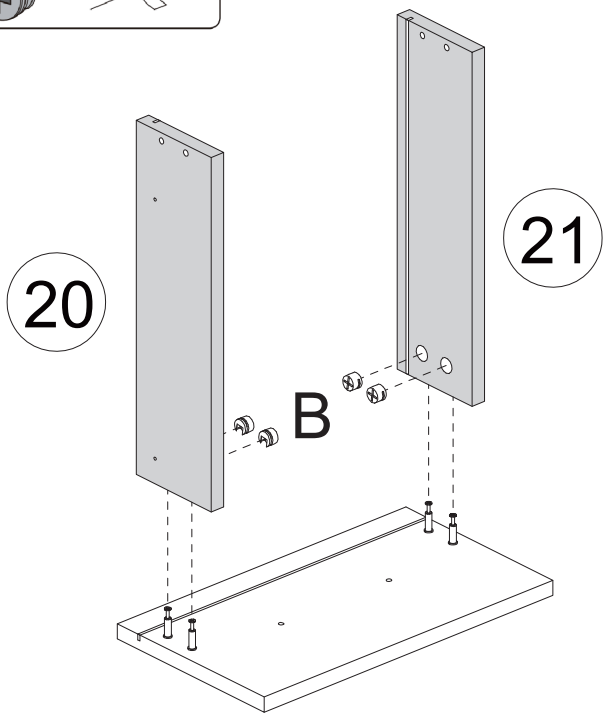

S37

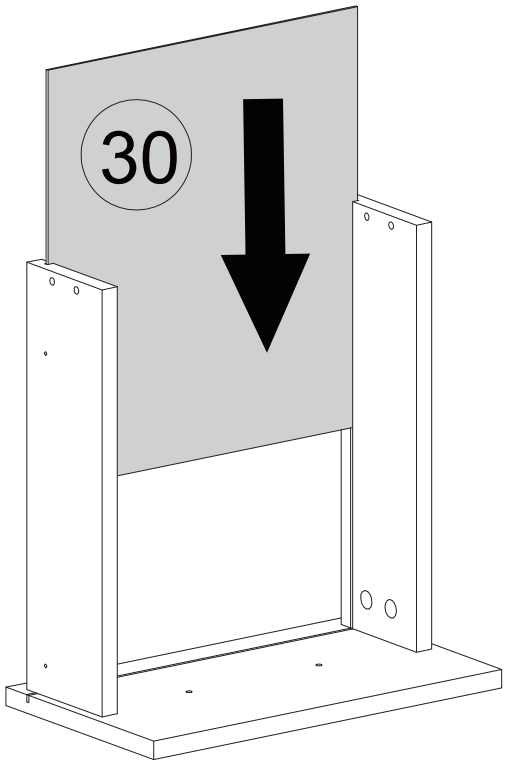

S38

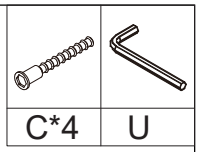

C*4	U

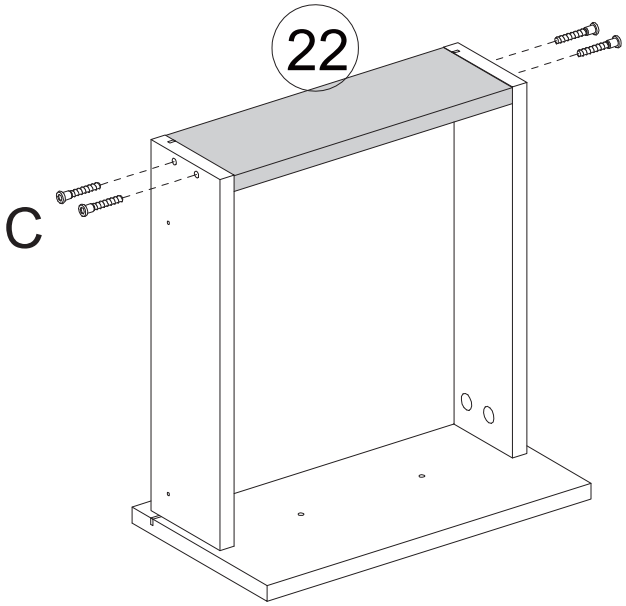

S39

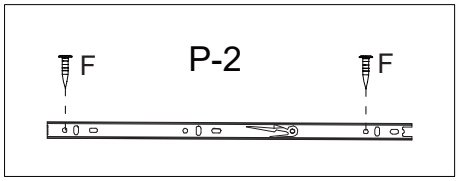





F*4	T

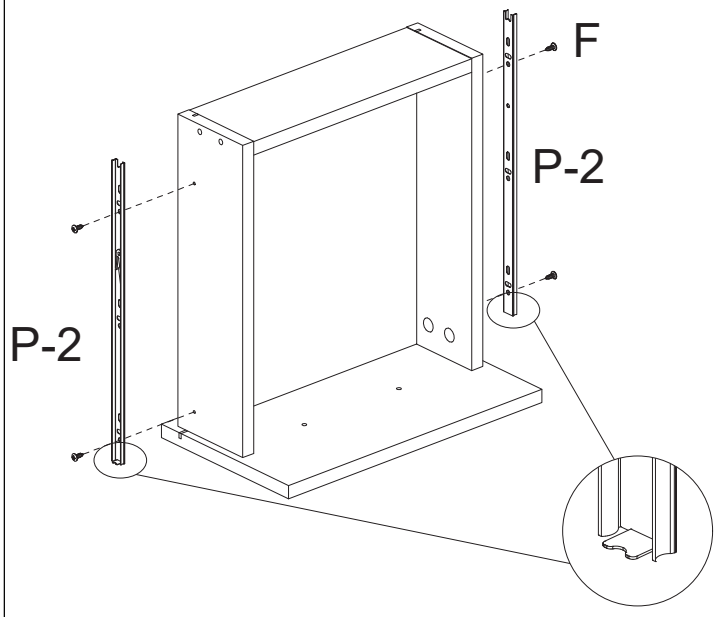

S40







J*1	D*2	T

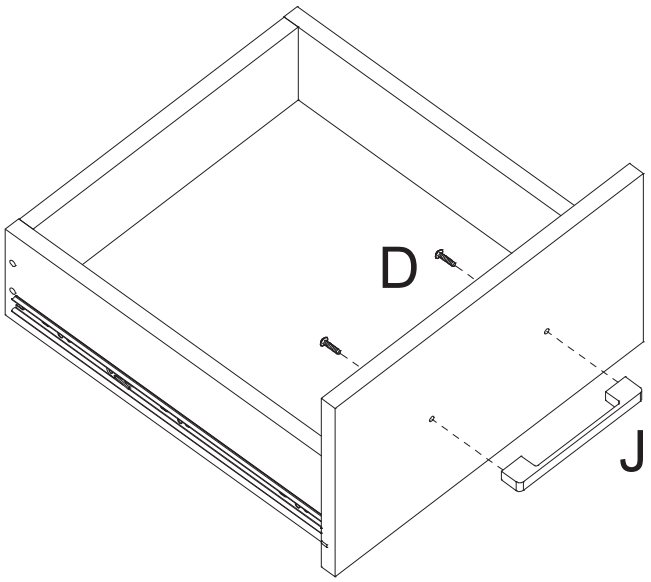

S41

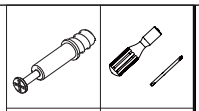

A*4 | T

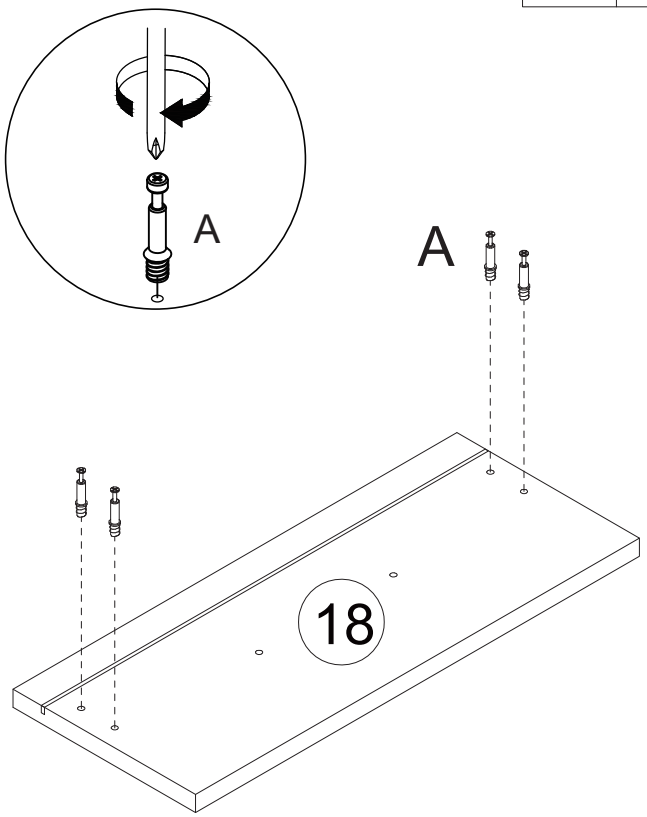

S42 Insert the minifix (B) with the cross-arrow mark facing upward and aligned with the panel's top through hole. Then tighten it clockwise

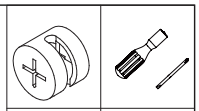

B*4 | T

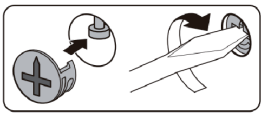

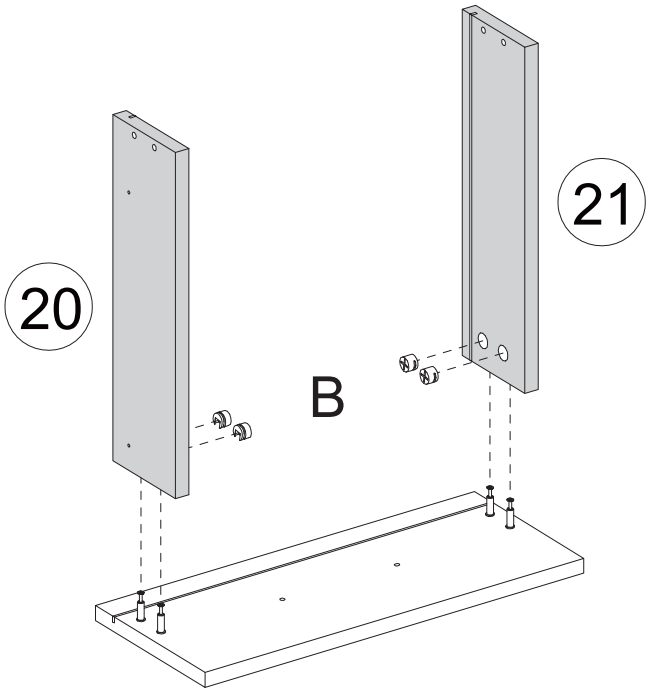

S43

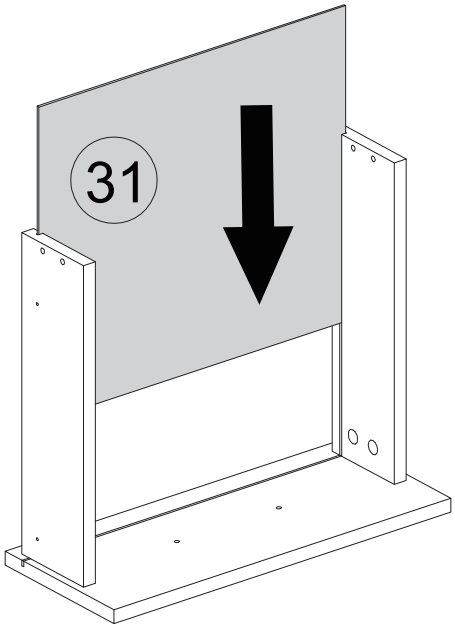

S44

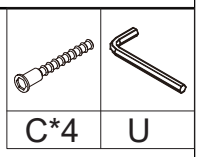

C*4 | U

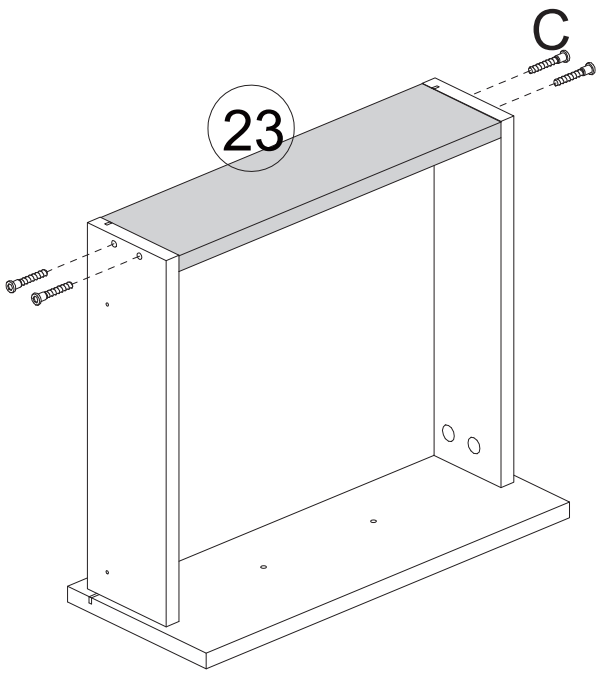

S45

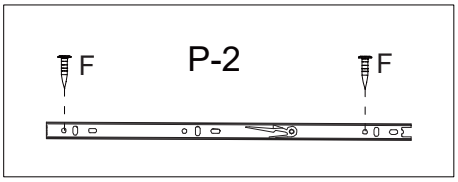

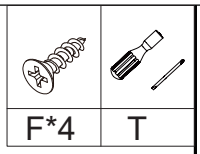

F*4	T

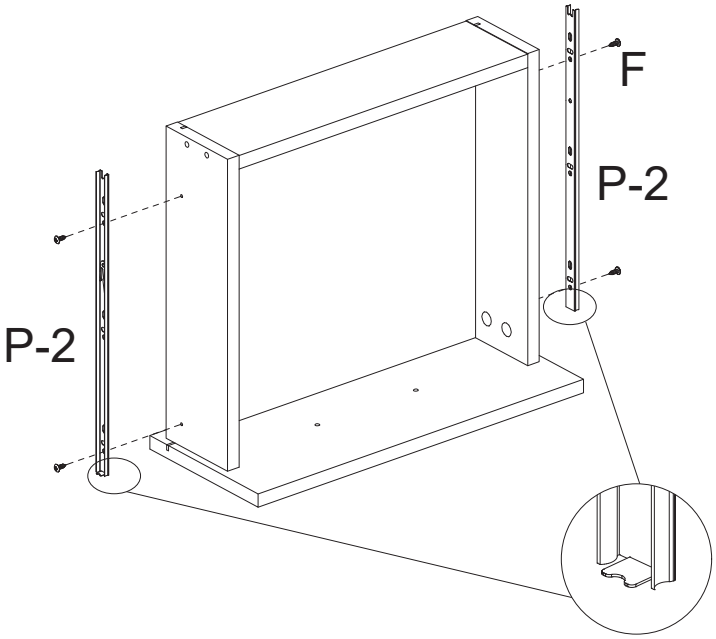

S46

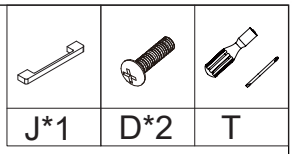

J*1	D*2	T

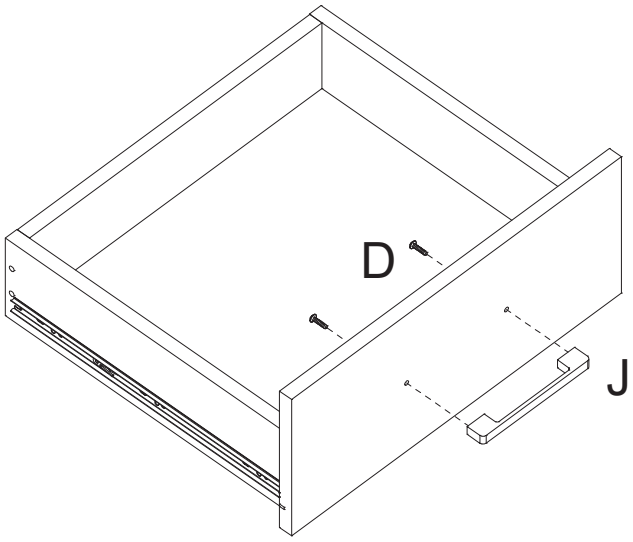

S47

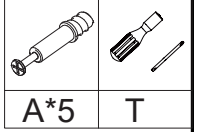

A*5	T

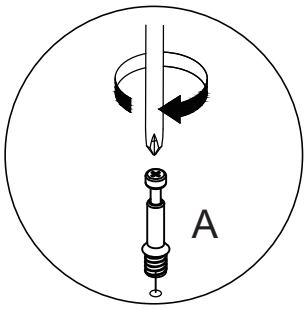

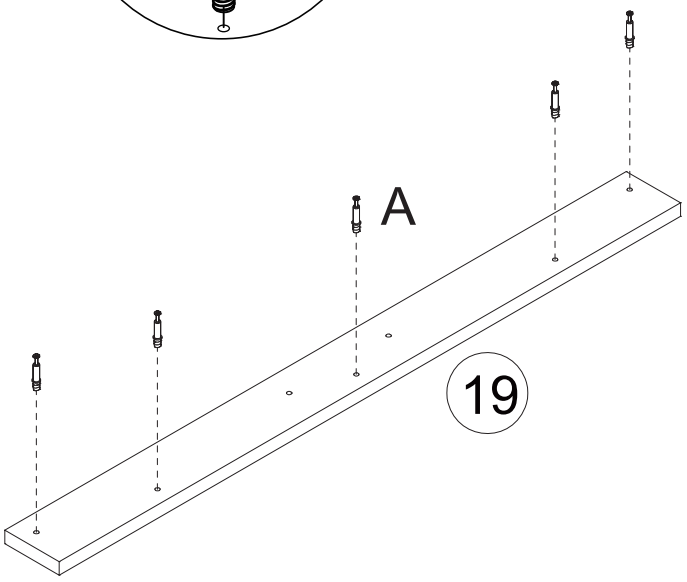

S48

Insert the minifix (B) with the cross-arrow mark facing upward and aligned with the panel's top through hole. Then tighten it clockwise

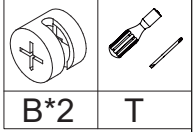

B*2	T

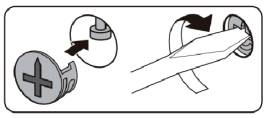

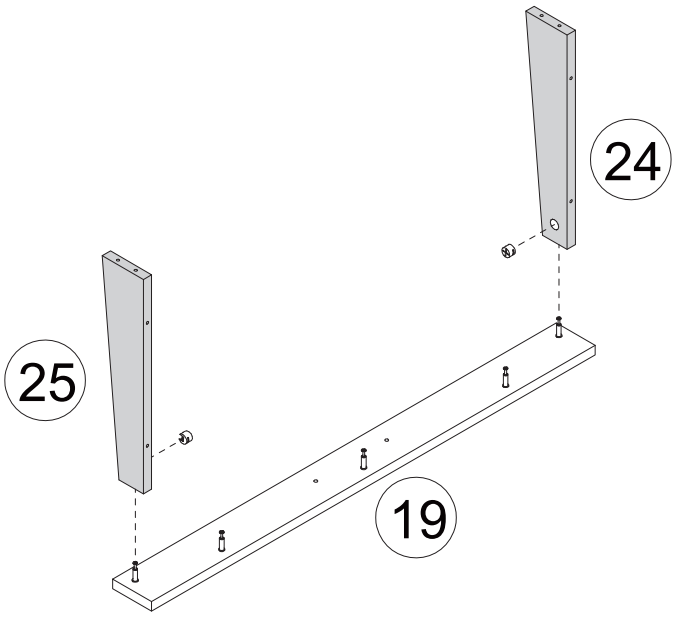

S49

Insert the minifix (B) with the cross-arrow mark facing upward and aligned with the panel's top through hole. Then tighten it clockwise

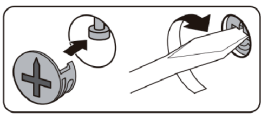

	
B*3	T
	
C*4	U

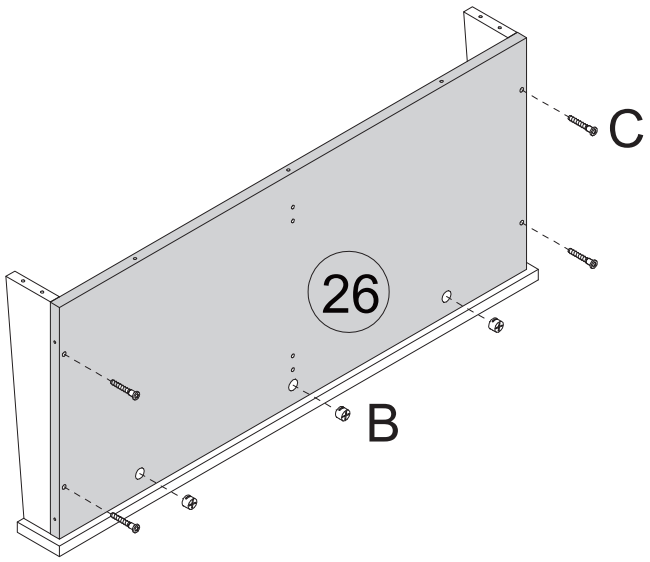

S50

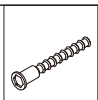	
C*7	U

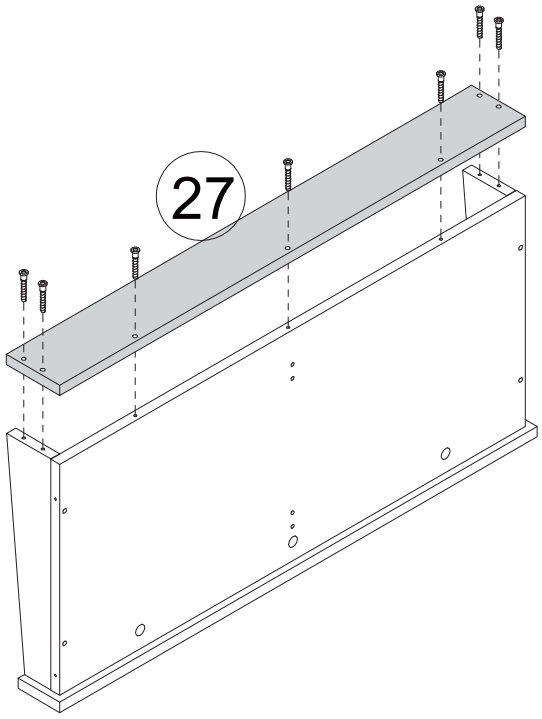

S51

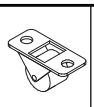		
K*2	F*4	T

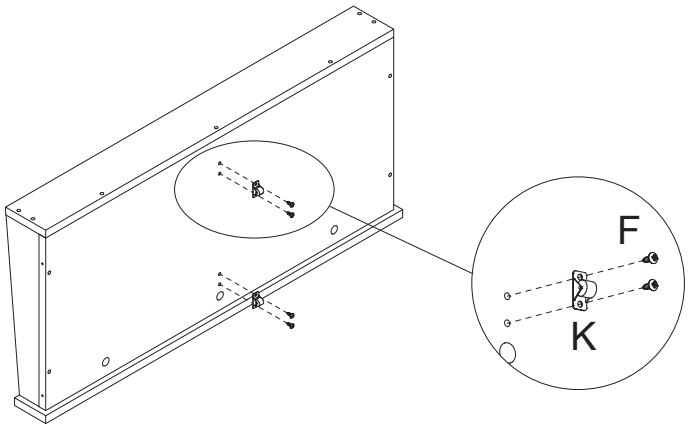

S52

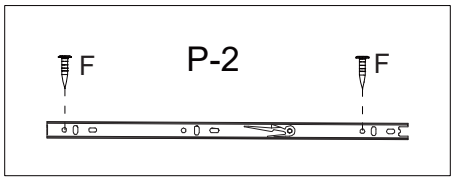

	
F*4	T

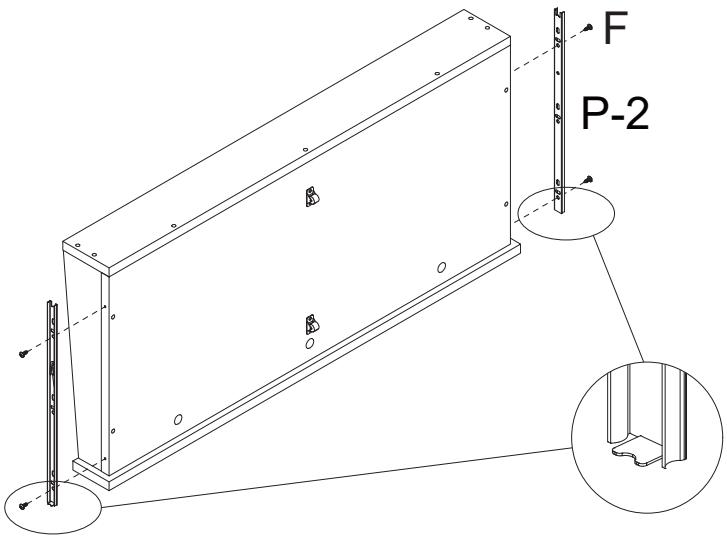

S53

J*1	D*2	T

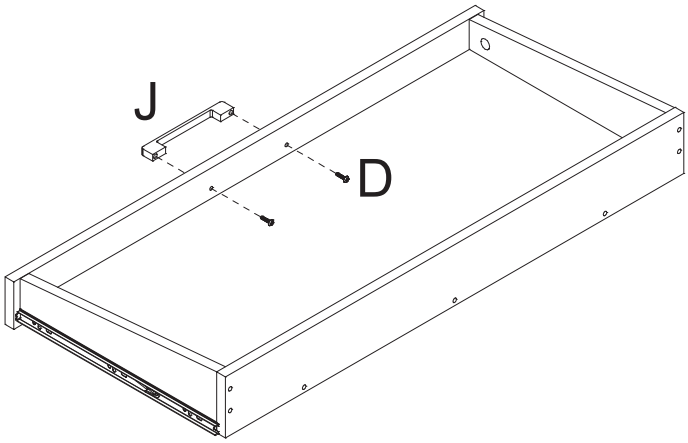

S54

To install the drawer into the cabinet:

1. Preparation: Move the ball bearing assembly on the cabinet glide to its outermost position.

2. Installation: Align the drawer. Engage the upper and lower tabs on the drawer's side with the corresponding slots above and below the cabinet glide. Gently push the drawer inward until you hear an audible click, indicating it is locked in place.

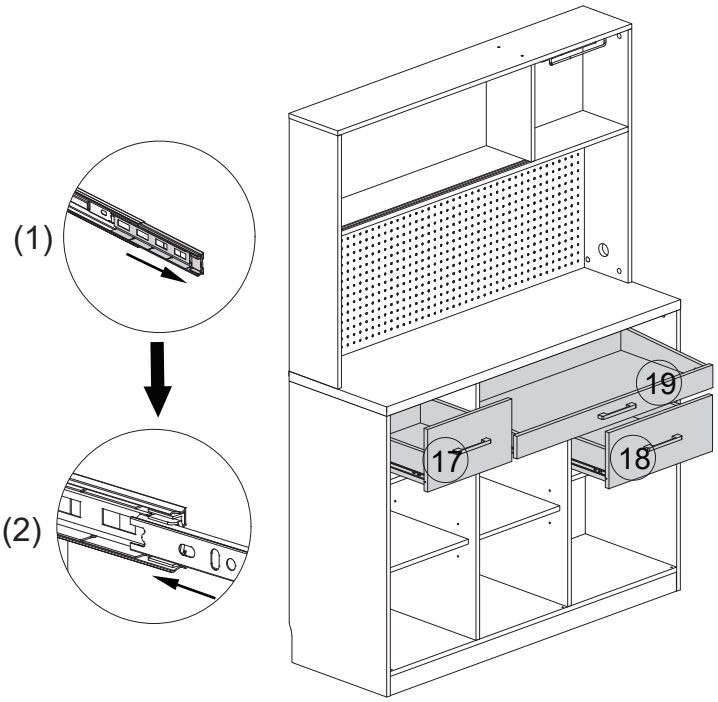

S55

H*1	G*1

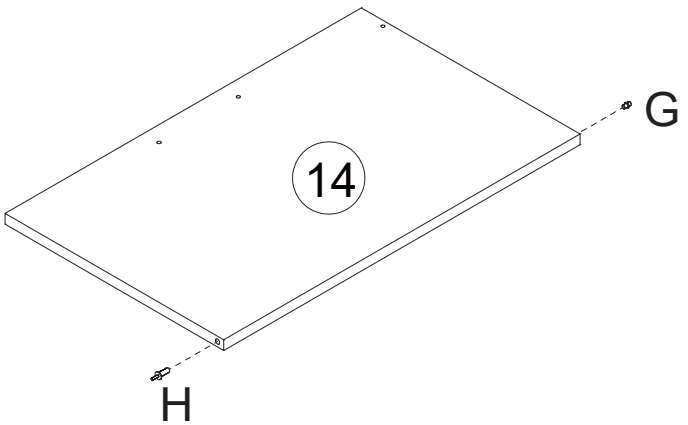

S56

S*1	F*1	J*1	D*2	T

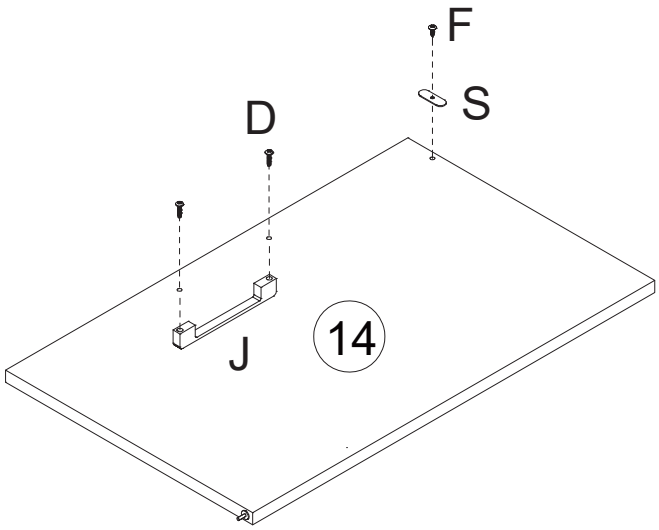

S57

H*1	G*1

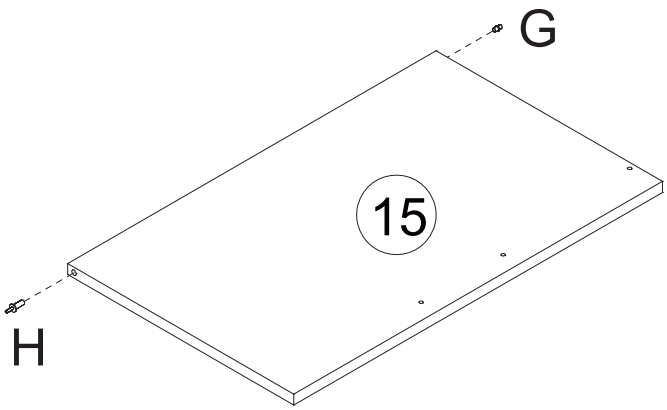

S58

S*1	F*1	J*1	D*2	T

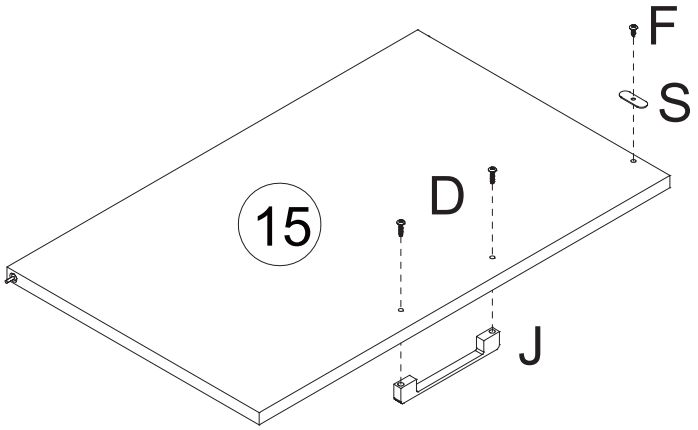

S59

H*1	G*1

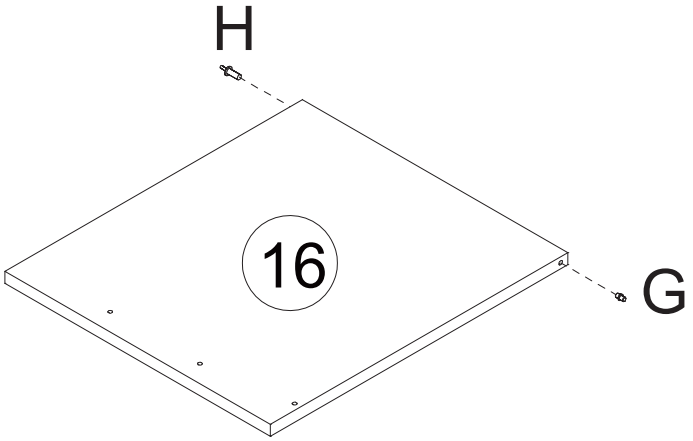

S60

S*1	F*1	J*1	D*2	T

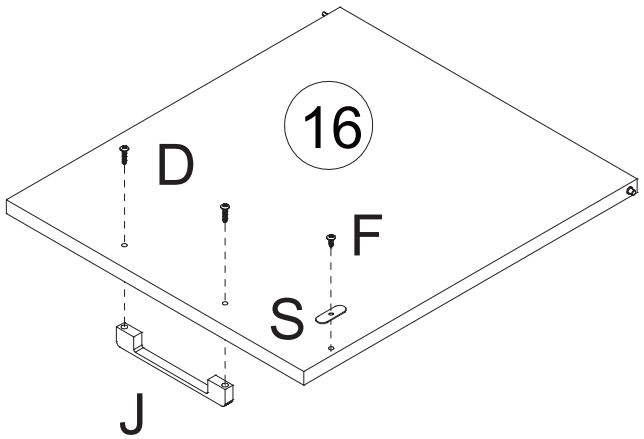

S61

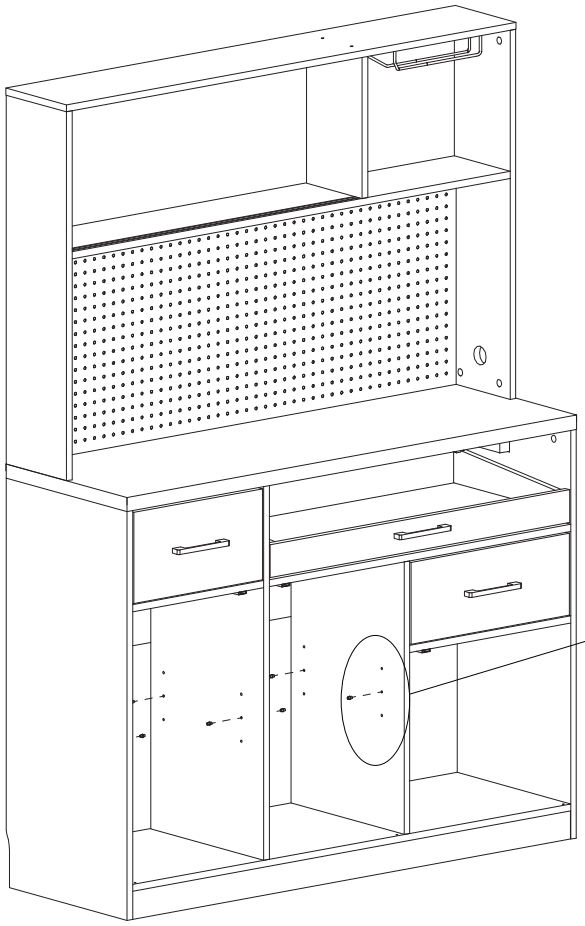

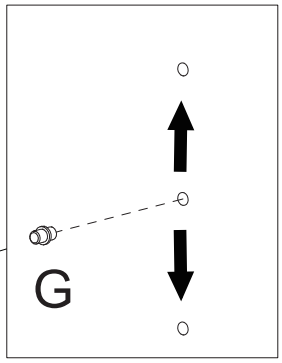

G*8

Adjustable holes. Customers can adjust the height as required.

S62

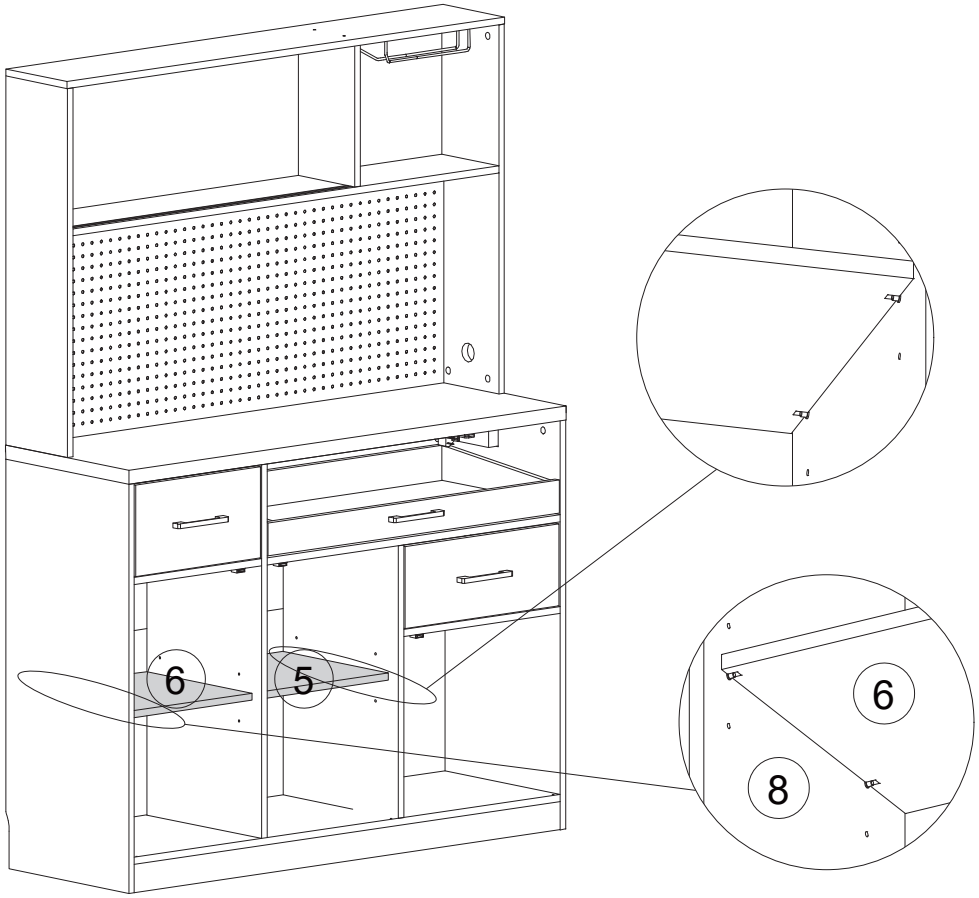

S63

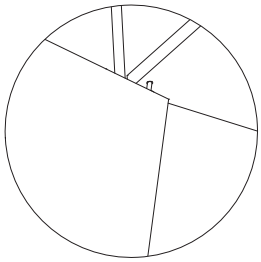

Tilt the door panel and
insert the G# into
the Top panel plate hole.

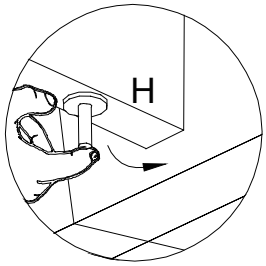

Press part H and hold

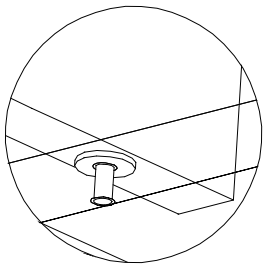

Move the door panel until part H
aligns with and fits into the hole
in the bottom panel.

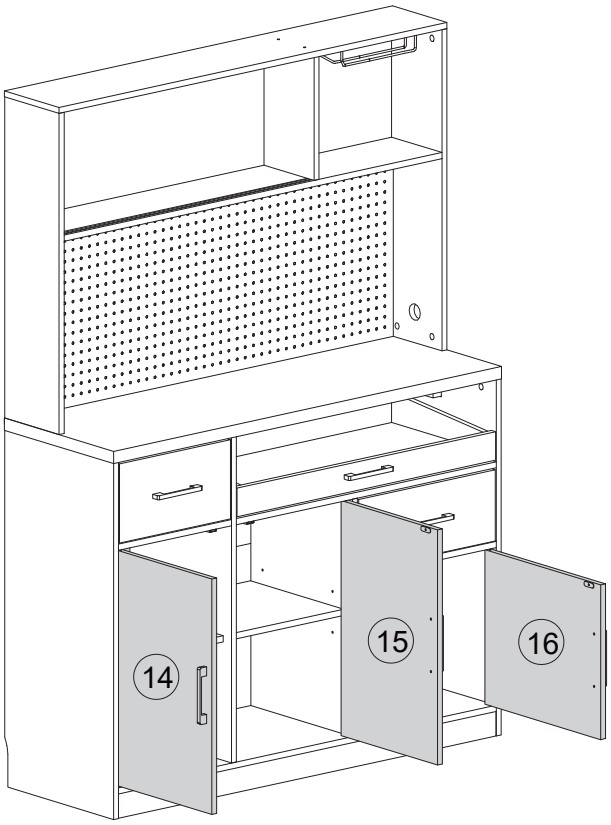

S64

		
J*2	E*4	T

X2

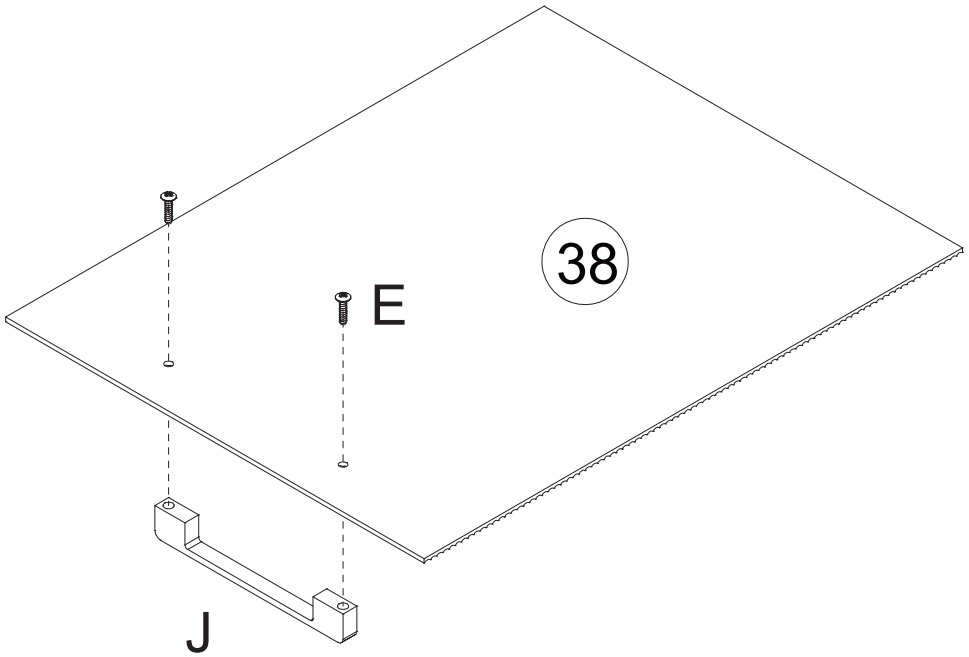

S65

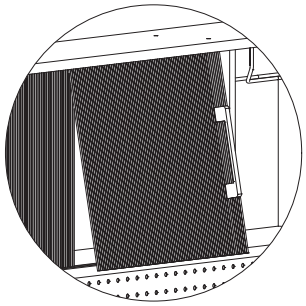

Tilt the door panel and insert it into the slot of Top Panel .

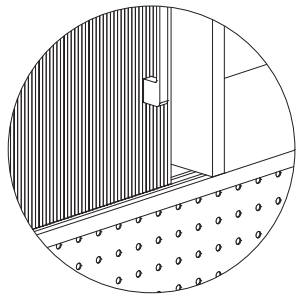

Move the door panel vertically downward until it aligns with the slot on the base plate and engages into place.

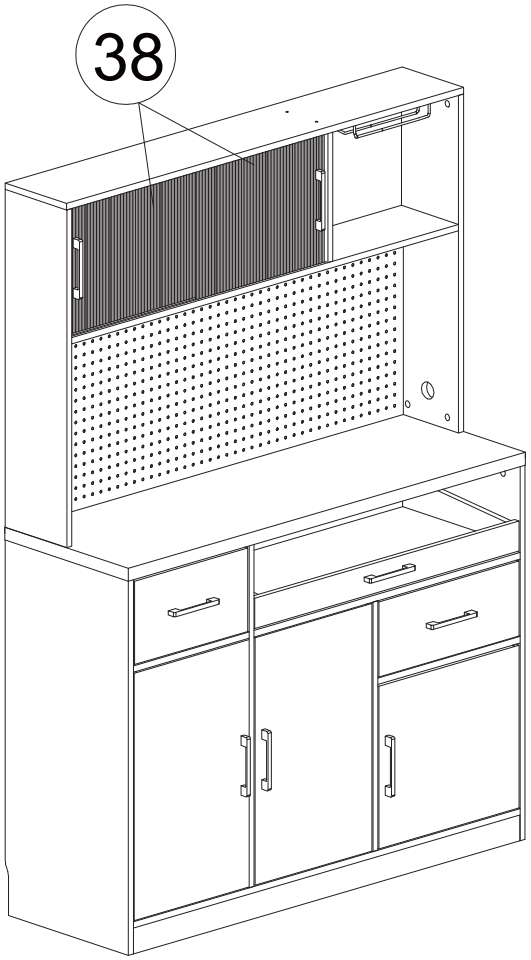

S66

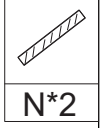

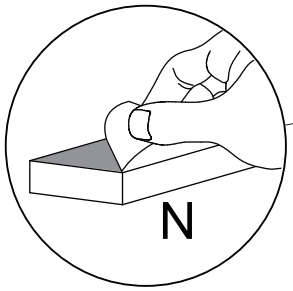

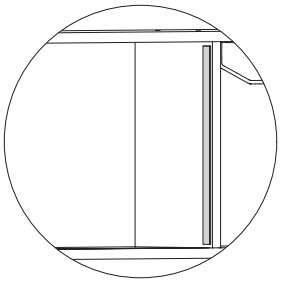

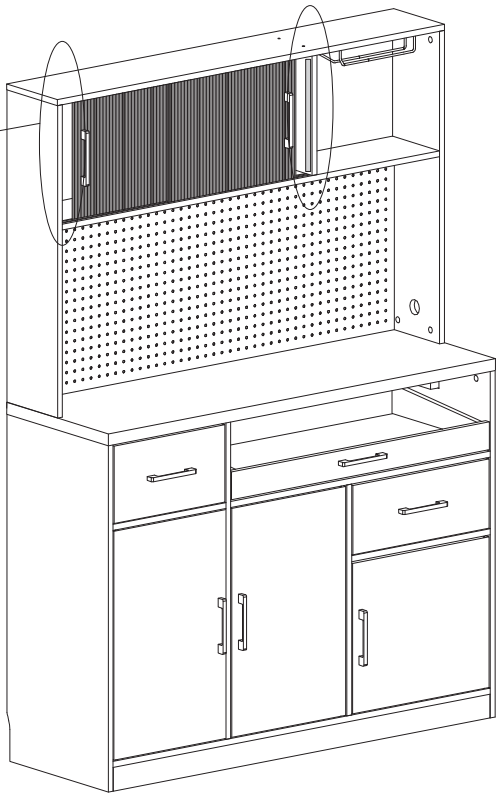

S67

W*1

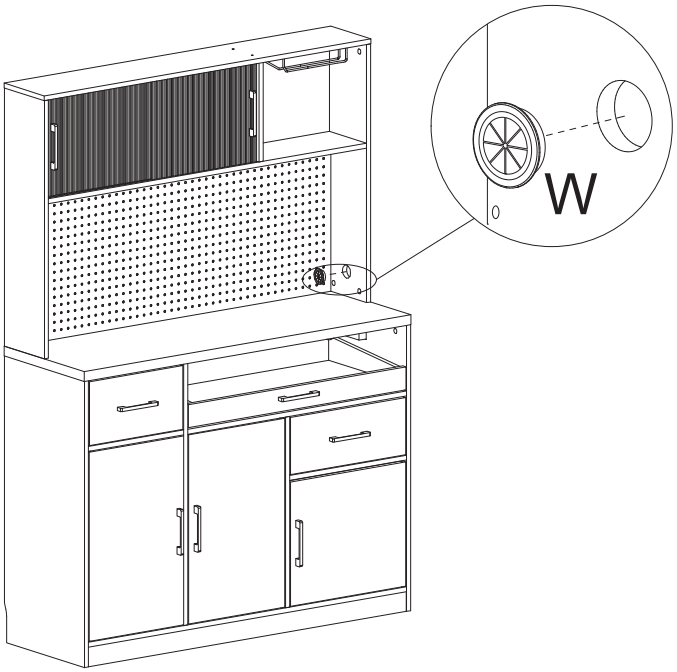

S68

Y*6

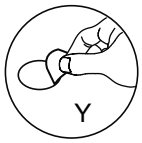

Rip the protective paper

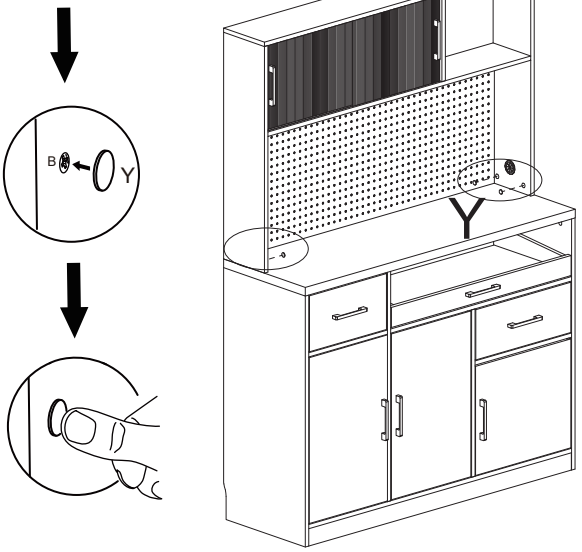

S69

V*2

The steps starting from here are to completely prevent the Cabinet from falling over.
You can skip them if you don't want to damage the wall.

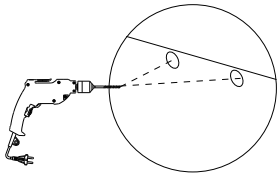

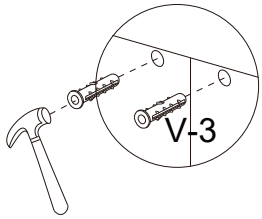

Please insert the part (V-3) into the hole

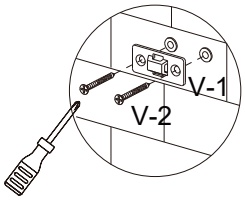

Use V-2 to fix V-1 on the wall.

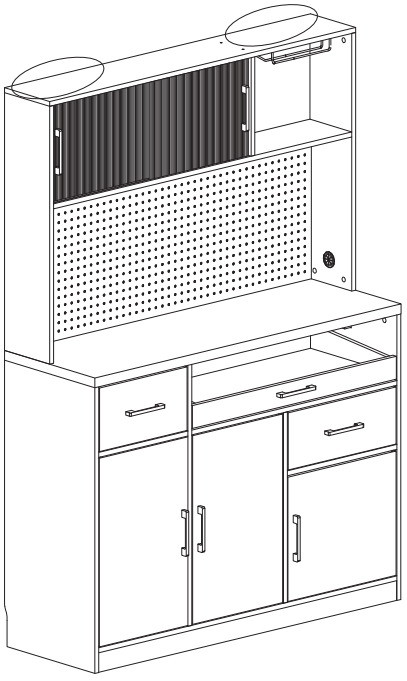

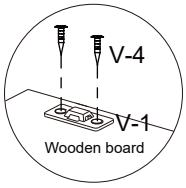

Use V-4 to fix V-1 on the Wooden board

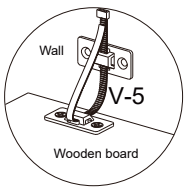

Use V-5 to fasten V-1 together.

V20261014